No. PF-2A0C

TCM®

# PARTS CATALOGUE

## FORKLIFT TRUCK

### Gas. & Diesel Powered

| | |
|---|---|
| FG20C3 | FD20C3 |
| FG20T3 | FD20T3 |
| FG20W3 | FD20W3 |
| FG25C3 | FD25C3 |
| FG25T3 | FD25T3 |
| FG25W3 | FD25W3 |
| FG20C13 | FD20C13 |
| FG20T13 | FD20T13 |
| FG25C13 | FD25C13 |
| FG25T13 | FD25T13 |

TCM CORPORATION

# ご使用のまえに

このパーツカタログは，TCMフォークリフトの構成部品を収録しています。

## 部品ご注文について

部品ご注文の際は，必ず車両の形式・仕様・製造番号（号車），部品番号および注文数を明示してください。車両の製造番号（号車）は車両銘板に表示しています。

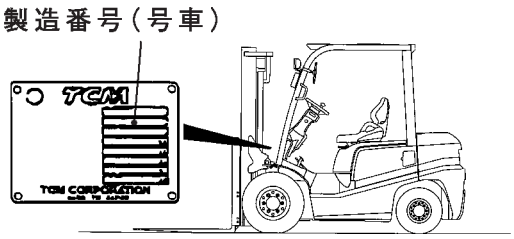


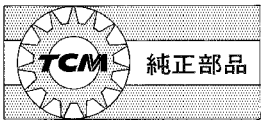


部品は，必ず「TCM純正部品」をご使用ください。
純正部品以外の部品をご使用になり，故障が発生した場合は保証できません。

## ご使用について

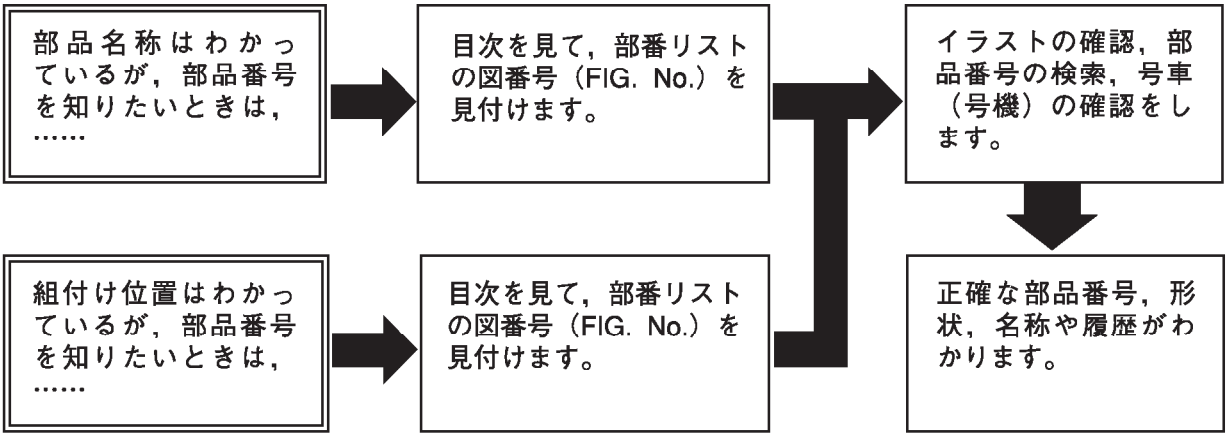


## 略語および記号

| | |
|---|---|
| ＡＳＳＹ | 組立品を示します。 |
| ＲＨ | 車両の前方向に向かって右側を示します。 |
| ＬＨ | 車両の前方向に向かって左側を示します。 |
| ＡＲ | 必要に応じた数を使用します。 |
| ＊ | セットおよびキットの販売部品を示します。 |
| Ｔ | 厚みを示します。 |
| ＋ | 図示していません。 |
| ＃ | 単体販売しません。 |

部品は，品質向上のため予告なく変更することがありますので，あらかじめご了承ください。
詳細は，TCM指定整備工場にご相談ください。

# INTRODUCTION

This Parts Catalogue contains the component parts of the TCM FORKLIFT TRUCK.

## How to order parts

When ordering, be sure to specify the model name, specification and serial number (machine number) of your machine, as well as the part number and desired quantity for each part. The machine serial number (machine number) is indicated on the machine name plate.

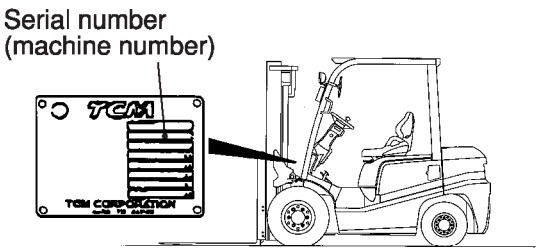


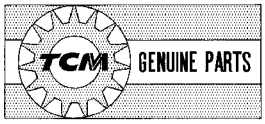


Always use "TCM's Genuine Parts". We cannot guarantee any loss or trouble attributable to other parts than ours.

## How to use the Parts Catalogue

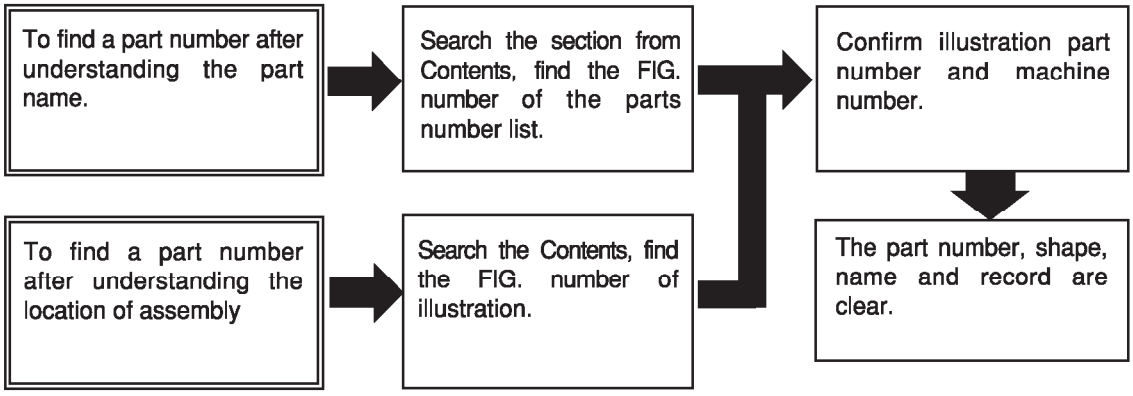


## Abbreviations and symbols

| | |
|---|---|
| ASSY ··· | Assembled unit. |
| RH ····· | Right-hand when viewed forward on the truck. |
| LH ····· | Left-hand when viewed forward on the truck. |
| AR ····· | Quantity required. |
| * ····· | The marketable part set or kit. |
| T ····· | Thickness. |
| + ····· | Not illustrated. |
| # ····· | Not sold separately. |

Materals and specifications subject to change without notice.

# CONTENTS　目次

## CHASSIS シャーシ

| | | | | | | | | | |
|---|---|---|---|---|---|---|---|---|---|
| a | FG20C13 | e | FG20C3 | i | FG20W3 | m | FD25C13 | q | FD25C3 |
| b | FG20T13 | f | FG20T3 | j | FG25W3 | n | FD25T13 | r | FD25T3 |
| c | FG25C13 | g | FG25C3 | k | FD20C13 | o | FD20C3 | s | FD20W3 |
| d | FG25T13 | h | FG25T3 | l | FD20T13 | p | FD20T3 | t | FD25W3 |

| SECTION　部門 | a | b | c | d | e | f | g | h | i | j | k | l | m | n | o | p | q | r | s | t | FIG.NO. |
|---|---|---|---|---|---|---|---|---|---|---|---|---|---|---|---|---|---|---|---|---|---|
| ENGINE MOUNT (GASOLINE)<br>ｴﾝｼﾞﾝﾏｳﾝﾄ | ○ | ○ | ○ | ○ | ○ | ○ | ○ | ○ | ○ | ○ | | | | | | | | | | | 1 |
| ENGINE MOUNT (DIESEL)<br>ｴﾝｼﾞﾝﾏｳﾝﾄ | | | | | | | | | | | ○ | ○ | ○ | ○ | ○ | ○ | ○ | ○ | ○ | ○ | 2 |
| AIR CLEANER (GASOLINE)<br>ｴｱｰｸﾘｰﾅ | ○ | ○ | ○ | ○ | ○ | ○ | ○ | ○ | ○ | ○ | | | | | | | | | | | 3 |
| AIR CLEANER (DIESEL)<br>ｴｱｰｸﾘｰﾅ | | | | | | | | | | | ○ | ○ | ○ | ○ | ○ | ○ | ○ | ○ | ○ | ○ | 4 |
| AIR DUCT (GASOLINE)<br>ｴｱｰﾀﾞｸﾄ | ○ | ○ | ○ | ○ | ○ | ○ | ○ | ○ | ○ | ○ | | | | | | | | | | | 5 |
| AIR DUCT (DIESEL)<br>ｴｱｰﾀﾞｸﾄ | | | | | | | | | | | ○ | ○ | ○ | ○ | ○ | ○ | ○ | ○ | ○ | ○ | 6 |
| AIR DUCT (GASOLINE):[CAKB]<br>ｴｱｰﾀﾞｸﾄ | ○ | ○ | ○ | ○ | ○ | ○ | ○ | ○ | ○ | ○ | | | | | | | | | | | 7 |
| AIR DUCT (DIESEL):[CAKB]<br>ｴｱｰﾀﾞｸﾄ | | | | | | | | | | | ○ | ○ | ○ | ○ | ○ | ○ | ○ | ○ | ○ | ○ | 8 |
| COOLING UNIT (CLUTCH)(OIL CLUTCH)<br>ｸｰﾘﾝｸﾞﾕﾆｯﾄ | ○ | | ○ | | ○ | | ○ | | ○ | ○ | ○ | | ○ | | ○ | | ○ | | ○ | ○ | 9 |
| COOLING UNIT (TOR-CON)<br>ｸｰﾘﾝｸﾞﾕﾆｯﾄ | | ○ | | ○ | | ○ | | ○ | | | | ○ | | ○ | | ○ | | ○ | | | 10 |
| FAN SHROUD (GASOLINE)<br>ﾌｧﾝｼｭﾗｳﾄﾞ | ○ | ○ | ○ | ○ | ○ | ○ | ○ | ○ | ○ | ○ | | | | | | | | | | | 11 |
| FAN SHROUD (DIESEL)<br>ﾌｧﾝｼｭﾗｳﾄﾞ | | | | | | | | | | | ○ | ○ | ○ | ○ | ○ | ○ | ○ | ○ | ○ | ○ | 12 |
| RADIATOR PARTS & RESERVE TANK<br>ﾗｼﾞｴｰﾀﾊﾟｰﾂ&ﾘｻﾞｰﾌﾞﾀﾝｸ | ○ | ○ | ○ | ○ | ○ | ○ | ○ | ○ | ○ | ○ | ○ | ○ | ○ | ○ | ○ | ○ | ○ | ○ | ○ | ○ | 13 |
| RADIATOR HOSE (GASOLINE)<br>ﾗｼﾞｴｰﾀﾎｰｽ | ○ | ○ | ○ | ○ | ○ | ○ | ○ | ○ | ○ | ○ | | | | | | | | | | | 14 |
| RADIATOR HOSE (DIESEL)<br>ﾗｼﾞｴｰﾀﾎｰｽ | | | | | | | | | | | ○ | ○ | ○ | ○ | ○ | ○ | ○ | ○ | ○ | ○ | 15 |
| DUST SCREEN [DSR006][DSR008]<br>ﾀﾞｽﾄｽｸﾘｰﾝ | ○ | ○ | ○ | ○ | ○ | ○ | ○ | ○ | ○ | ○ | ○ | ○ | ○ | ○ | ○ | ○ | ○ | ○ | | | 16 |
| FUEL SYSTEM (GASOLINE)<br>ﾌｭｰｴﾙｼｽﾃﾑ | ○ | ○ | ○ | ○ | ○ | ○ | ○ | ○ | ○ | ○ | | | | | | | | | | | 17 |
| FUEL SYSTEM (DIESEL)<br>ﾌｭｰｴﾙｼｽﾃﾑ | | | | | | | | | | | ○ | ○ | ○ | ○ | ○ | ○ | ○ | ○ | ○ | ○ | 18 |
| EXHAUST SYSTEM<br>ｴｷｿﾞｰｽﾄｼｽﾃﾑ | ○ | ○ | ○ | ○ | ○ | ○ | ○ | ○ | ○ | ○ | ○ | ○ | ○ | ○ | ○ | ○ | ○ | ○ | ○ | ○ | 19 |
| EXHAUST SYSTEM [TUE]<br>ｴｷｿﾞｰｽﾄｼｽﾃﾑ | ○ | ○ | ○ | ○ | ○ | ○ | ○ | ○ | ○ | ○ | ○ | ○ | ○ | ○ | ○ | ○ | ○ | ○ | ○ | ○ | 20 |
| EXHAUST SYSTEM (DIESEL):[DPF]<br>ｴｷｿﾞｰｽﾄｼｽﾃﾑ | | | | | | | | | | | | | | | ○ | ○ | ○ | ○ | | | 21 |

# CONTENTS　目次

## CHASSIS シャーシ

| | | | | | | | | | | | |
|---|---|---|---|---|---|---|---|---|---|---|---|
| a | FG20C13 | e | FG20C3 | i | FG20W3 | m | FD25C13 | q | FD25C3 |
| b | FG20T13 | f | FG20T3 | j | FG25W3 | n | FD25T13 | r | FD25T3 |
| c | FG25C13 | g | FG25C3 | k | FD20C13 | o | FD20C3 | s | FD20W3 |
| d | FG25T13 | h | FG25T3 | l | FD20T13 | p | FD20T3 | t | FD25W3 |

| SECTION　部門 | a | b | c | d | e | f | g | h | i | j | k | l | m | n | o | p | q | r | s | t | FIG.NO. |
|---|---|---|---|---|---|---|---|---|---|---|---|---|---|---|---|---|---|---|---|---|---|
| DPF WIRE HARNESS (DIESEL):[DPF]<br>DPFﾜｲﾔﾊｰﾈｽ | | | | | | | | | | | | | | | ○ | ○ | ○ | ○ | | | 22 |
| FRONT TUBE & JOINT (GASOLINE)<br>ﾌﾛﾝﾄﾁｭｰﾌﾞ&ｼﾞｮｲﾝﾄ | ○ | ○ | ○ | ○ | ○ | ○ | ○ | ○ | ○ | ○ | | | | | | | | | | | 23 |
| FRONT TUBE & JOINT (DIESEL)<br>ﾌﾛﾝﾄﾁｭｰﾌﾞ&ｼﾞｮｲﾝﾄ | | | | | | | | | | | ○ | ○ | ○ | ○ | ○ | ○ | ○ | ○ | ○ | ○ | 24 |
| FRONT TUBE & JOINT (DIESEL):[DPF]<br>ﾌﾛﾝﾄﾁｭｰﾌﾞ&ｼﾞｮｲﾝﾄ | | | | | | | | | | | | | | | ○ | ○ | ○ | ○ | | | 25 |
| COMBINATION METER<br>ｺﾝﾋﾞﾈｰｼｮﾝﾒｰﾀ | ○ | ○ | ○ | ○ | ○ | ○ | ○ | ○ | ○ | ○ | ○ | ○ | ○ | ○ | ○ | ○ | ○ | ○ | ○ | ○ | 26 |
| FRONT GUARD WIRE HARNESS (CLUTCH)(OIL CLUTCH)<br>ﾌﾛﾝﾄｶﾞｰﾄﾞﾜｲﾔﾊｰﾈｽ | ○ | | ○ | | ○ | | ○ | | ○ | ○ | ○ | | ○ | | ○ | | ○ | | ○ | ○ | 27 |
| FRONT GUARD WIRE HARNESS (TOR-CON)<br>ﾌﾛﾝﾄｶﾞｰﾄﾞﾜｲﾔﾊｰﾈｽ | | ○ | | ○ | | ○ | | ○ | | | | ○ | | ○ | | ○ | | ○ | | | 28 |
| COMBINATION SWITCH (CLUTCH)(OIL CLUTCH)<br>ｺﾝﾋﾞﾈｰｼｮﾝｽｲｯﾁ | ○ | | ○ | | ○ | | ○ | | ○ | ○ | ○ | | ○ | | ○ | | ○ | | ○ | ○ | 29 |
| COMBINATION SWITCH (TOR-CON)<br>ｺﾝﾋﾞﾈｰｼｮﾝｽｲｯﾁ | | ○ | | ○ | | ○ | | ○ | | | | ○ | | ○ | | ○ | | ○ | | | 30 |
| ELECTRIC PARTS (GASOLINE:CLUTCH & OIL CLUTCH)<br>ｴﾚｸﾄﾘｯｸﾊﾟｰﾂ | ○ | | ○ | | ○ | | ○ | | ○ | ○ | | | | | | | | | | | 31 |
| ELECTRIC PARTS (GASOLINE:TOR-CON)<br>ｴﾚｸﾄﾘｯｸﾊﾟｰﾂ | | ○ | | ○ | | ○ | | ○ | | | | | | | | | | | | | 32 |
| ELECTRIC PARTS (DIESEL:CLUTCH & OIL CLUTCH)<br>ｴﾚｸﾄﾘｯｸﾊﾟｰﾂ | | | | | | | | | | | ○ | | ○ | | ○ | | ○ | | ○ | ○ | 33 |
| ELECTRIC PARTS (DIESEL:TOR-CON)<br>ｴﾚｸﾄﾘｯｸﾊﾟｰﾂ | | | | | | | | | | | | ○ | | ○ | | ○ | | ○ | | | 34 |
| ENGINE WIRE HARNESS (GASOLINE:CLUTCH & OIL CLUTCH)<br>ｴﾝｼﾞﾝﾜｲﾔﾊｰﾈｽ | ○ | | ○ | | ○ | | ○ | | ○ | ○ | | | | | | | | | | | 35 |
| ENGINE WIRE HARNESS (GASOLINE:TOR-CON)<br>ｴﾝｼﾞﾝﾜｲﾔﾊｰﾈｽ | | ○ | | ○ | | ○ | | ○ | | | | | | | | | | | | | 36 |
| ENGINE WIRE HARNESS (DIESEL:CLUTCH & OIL CLUTCH)<br>ｴﾝｼﾞﾝﾜｲﾔﾊｰﾈｽ | | | | | | | | | | | ○ | | ○ | | ○ | | ○ | | ○ | ○ | 37 |
| ENGINE WIRE HARNESS (DIESEL:TOR-CON)<br>ｴﾝｼﾞﾝﾜｲﾔﾊｰﾈｽ | | | | | | | | | | | | ○ | | ○ | | ○ | | ○ | | | 38 |
| BATTERY (GASOLINE)<br>ﾊﾞｯﾃﾘ | ○ | ○ | ○ | ○ | ○ | ○ | ○ | ○ | ○ | ○ | | | | | | | | | | | 39 |
| BATTERY (DIESEL)<br>ﾊﾞｯﾃﾘ | | | | | | | | | | | ○ | ○ | ○ | ○ | ○ | ○ | ○ | ○ | ○ | ○ | 40 |
| HEAD LAMP & FRONT COMBINATION LAMP<br>ﾍｯﾄﾞﾗﾝﾌﾟ&ﾌﾛﾝﾄｺﾝﾋﾞﾈｰｼｮﾝﾗﾝﾌﾟ | ○ | ○ | ○ | ○ | ○ | ○ | ○ | ○ | ○ | ○ | ○ | ○ | ○ | ○ | ○ | ○ | ○ | ○ | ○ | ○ | 41 |
| REAR COMBINATION LAMP<br>ﾘﾔｰｺﾝﾋﾞﾈｰｼｮﾝﾗﾝﾌﾟ | ○ | ○ | ○ | ○ | ○ | ○ | ○ | ○ | ○ | ○ | ○ | ○ | ○ | ○ | ○ | ○ | ○ | ○ | ○ | ○ | 42 |

# CONTENTS　目次

## CHASSIS シャーシ

| | | | | | | | | | |
|---|---|---|---|---|---|---|---|---|---|
| a | FG20C13 | e | FG20C3 | i | FG20W3 | m | FD25C13 | q | FD25C3 |
| b | FG20T13 | f | FG20T3 | j | FG25W3 | n | FD25T13 | r | FD25T3 |
| c | FG25C13 | g | FG25C3 | k | FD20C13 | o | FD20C3 | s | FD20W3 |
| d | FG25T13 | h | FG25T3 | l | FD20T13 | p | FD20T3 | t | FD25W3 |

| SECTION　部門 | a | b | c | d | e | f | g | h | i | j | k | l | m | n | o | p | q | r | s | t | FIG.NO. |
|---|---|---|---|---|---|---|---|---|---|---|---|---|---|---|---|---|---|---|---|---|---|
| REAR COMBINATION LAMP [RRE][SCB001][SCBCR]<br>ﾘﾔｰｺﾝﾋﾞﾈｰｼｮﾝﾗﾝﾌﾟ | ○ | ○ | ○ | ○ | ○ | ○ | ○ | ○ | ○ | ○ | ○ | ○ | ○ | ○ | ○ | ○ | ○ | ○ | ○ | ○ | 43 |
| LICENSE LAMP [RRE]<br>ﾗｲｾﾝｽﾗﾝﾌﾟ | ○ | ○ | ○ | ○ | ○ | ○ | ○ | ○ | ○ | ○ | ○ | ○ | ○ | ○ | ○ | ○ | ○ | ○ | ○ | ○ | 44 |
| LICENSE LAMP [SCB001/RRE][SCBCR/RRE]<br>ﾗｲｾﾝｽﾗﾝﾌﾟ | | | | | ○ | ○ | ○ | ○ | ○ | ○ | | | | | ○ | ○ | ○ | ○ | ○ | ○ | 45 |
| LICENSE LAMP [RRE/LPG][RRE/LPO]<br>ﾗｲｾﾝｽﾗﾝﾌﾟ | ○ | ○ | ○ | ○ | ○ | ○ | ○ | ○ | ○ | ○ | | | | | | | | | | | 46 |
| LICENSE LAMP [LP]<br>ﾗｲｾﾝｽﾗﾝﾌﾟ | ○ | ○ | ○ | ○ | ○ | ○ | ○ | ○ | ○ | ○ | ○ | ○ | ○ | ○ | ○ | ○ | ○ | ○ | ○ | ○ | 47 |
| REAR WORKING LIGHT [RWLR]<br>ﾘﾔｰﾜｰｷﾝｸﾞﾗｲﾄ | ○ | ○ | ○ | ○ | ○ | ○ | ○ | ○ | ○ | ○ | ○ | ○ | ○ | ○ | ○ | ○ | ○ | ○ | ○ | ○ | 48 |
| REAR WORKING LIGHT [RWLL]<br>ﾘﾔｰﾜｰｷﾝｸﾞﾗｲﾄ | ○ | ○ | ○ | ○ | ○ | ○ | ○ | ○ | ○ | ○ | ○ | ○ | ○ | ○ | ○ | ○ | ○ | ○ | ○ | ○ | 49 |
| REAR WORKING LIGHT [RWL2]<br>ﾘﾔｰﾜｰｷﾝｸﾞﾗｲﾄ | ○ | ○ | ○ | ○ | ○ | ○ | ○ | ○ | ○ | ○ | ○ | ○ | ○ | ○ | ○ | ○ | ○ | ○ | ○ | ○ | 50 |
| REAR WORKING LIGHT WIRE HARNESS [RWL]<br>ﾘﾔｰﾜｰｷﾝｸﾞﾗｲﾄﾜｲﾔﾊｰﾈｽ | ○ | ○ | ○ | ○ | ○ | ○ | ○ | ○ | ○ | ○ | ○ | ○ | ○ | ○ | ○ | ○ | ○ | ○ | ○ | ○ | 51 |
| REAR WORKING LIGHT WIRE HARNESS [RWL/BBR]<br>ﾘﾔｰﾜｰｷﾝｸﾞﾗｲﾄﾜｲﾔﾊｰﾈｽ | ○ | ○ | ○ | ○ | ○ | ○ | ○ | ○ | ○ | ○ | ○ | ○ | ○ | ○ | ○ | ○ | ○ | ○ | ○ | ○ | 52 |
| REVOLVING LIGHT [RLY][RLR]<br>ﾘﾎﾞﾙﾋﾞﾝｸﾞﾗｲﾄ | ○ | ○ | ○ | ○ | ○ | ○ | ○ | ○ | ○ | ○ | ○ | ○ | ○ | ○ | ○ | ○ | ○ | ○ | ○ | ○ | 53 |
| REVOLVING LIGHT WIRE HARNESS [RLY][RLR]<br>ﾘﾎﾞﾙﾋﾞﾝｸﾞﾗｲﾄﾜｲﾔﾊｰﾈｽ | ○ | ○ | ○ | ○ | ○ | ○ | ○ | ○ | ○ | ○ | ○ | ○ | ○ | ○ | ○ | ○ | ○ | ○ | ○ | ○ | 54 |
| BACK BUZZER<br>ﾊﾞｯｸﾌﾞｻﾞｰ | ○ | ○ | ○ | ○ | ○ | ○ | ○ | ○ | ○ | ○ | ○ | ○ | ○ | ○ | ○ | ○ | ○ | ○ | ○ | ○ | 55 |
| HEATER UNIT [HR]<br>ﾋｰﾀﾕﾆｯﾄ | ○ | ○ | ○ | ○ | ○ | ○ | ○ | ○ | ○ | ○ | ○ | ○ | ○ | ○ | ○ | ○ | ○ | ○ | ○ | ○ | 56 |
| HEATER VALVE & ELBOW [HR]<br>ﾋｰﾀﾊﾞﾙﾌﾞ&ｴﾙﾎﾞ | ○ | ○ | ○ | ○ | ○ | ○ | ○ | ○ | ○ | ○ | ○ | ○ | ○ | ○ | ○ | ○ | ○ | ○ | ○ | ○ | 57 |
| DRIVE UNIT MOUNT (CLUTCH)<br>ﾄﾞﾗｲﾌﾞﾕﾆｯﾄﾏｳﾝﾄ | ○ | | ○ | | ○ | | ○ | | | | ○ | | ○ | | ○ | | ○ | | | | 58 |
| DRIVE UNIT MOUNT (TOR-CON)<br>ﾄﾞﾗｲﾌﾞﾕﾆｯﾄﾏｳﾝﾄ | | ○ | | ○ | | ○ | | ○ | | | | ○ | | ○ | | ○ | | ○ | | | 59 |
| DRIVE UNIT MOUNT (OIL CLUTCH)<br>ﾄﾞﾗｲﾌﾞﾕﾆｯﾄﾏｳﾝﾄ | | | | | | | | | ○ | ○ | | | | | | | | | ○ | ○ | 60 |
| CHANGE LEVER (CLUTCH)(OIL CLUTCH)<br>ﾁｪﾝｼﾞﾚﾊﾞｰ | ○ | | ○ | | ○ | | ○ | | ○ | ○ | ○ | | ○ | | ○ | | ○ | | ○ | ○ | 61 |
| CLUTCH (CLUTCH)<br>ｸﾗｯﾁ | ○ | | ○ | | ○ | | ○ | | | | ○ | | ○ | | ○ | | ○ | | | | 62 |
| MISSION CASE (CLUTCH)(OIL CLUTCH)<br>ﾐｯｼｮﾝｹｰｽ | ○ | | ○ | | ○ | | ○ | | ○ | ○ | ○ | | ○ | | ○ | | ○ | | ○ | ○ | 63 |

# CONTENTS　目次

## CHASSIS シャーシ

| | | | | | | | | | | | |
|---|---|---|---|---|---|---|---|---|---|---|---|
| a | FG20C13 | e | FG20C3 | i | FG20W3 | m | FD25C13 | q | FD25C3 |
| b | FG20T13 | f | FG20T3 | j | FG25W3 | n | FD25T13 | r | FD25T3 |
| c | FG25C13 | g | FG25C3 | k | FD20C13 | o | FD20C3 | s | FD20W3 |
| d | FG25T13 | h | FG25T3 | l | FD20T13 | p | FD20T3 | t | FD25W3 |

| SECTION　部門 | a | b | c | d | e | f | g | h | i | j | k | l | m | n | o | p | q | r | s | t | FIG.NO. |
|---|---|---|---|---|---|---|---|---|---|---|---|---|---|---|---|---|---|---|---|---|---|
| MISSION GEAR (CLUTCH)(OIL CLUTCH)<br>ﾐｯｼｮﾝｷﾞｱｰ | ○ | | ○ | | ○ | | ○ | | ○ | ○ | ○ | | ○ | | ○ | | ○ | | ○ | ○ | 64 |
| TORQUE CONVERTER CASE (TOR-CON)<br>ﾄﾙｸｺﾝﾊﾞｰﾀｹｰｽ | | ○ | | ○ | | ○ | | ○ | | | | ○ | | ○ | | ○ | | ○ | | | 65 |
| CHARGING PUMP (TOR-CON)<br>ﾁｬｰｼﾞﾝｸﾞﾎﾟﾝﾌﾟ | | ○ | | ○ | | ○ | | ○ | | | | ○ | | ○ | | ○ | | ○ | | | 66 |
| MISSION CASE (TOR-CON)<br>ﾐｯｼｮﾝｹｰｽ | | ○ | | ○ | | ○ | | ○ | | | | ○ | | ○ | | ○ | | ○ | | | 67 |
| CLUTCH PACK (TOR-CON)<br>ｸﾗｯﾁﾊﾟｯｸ | | ○ | | ○ | | ○ | | ○ | | | | ○ | | ○ | | ○ | | ○ | | | 68 |
| CONTROL VALVE (TOR-CON)<br>ｺﾝﾄﾛｰﾙﾊﾞﾙﾌﾞ | | ○ | | ○ | | ○ | | ○ | | | | ○ | | ○ | | ○ | | ○ | | | 69 |
| CLUTCH (OIL CLUTCH)<br>ｸﾗｯﾁ | | | | | | | | | ○ | ○ | | | | | | | | | ○ | ○ | 70 |
| SPOT LIGHT [SPL]<br>ｽﾎﾟｯﾄﾗｲﾄ | ○ | ○ | ○ | ○ | ○ | ○ | ○ | ○ | ○ | ○ | ○ | ○ | ○ | ○ | ○ | ○ | ○ | ○ | ○ | ○ | 71 |
| FAN [FAN]<br>ﾌｧﾝ | ○ | ○ | ○ | ○ | ○ | ○ | ○ | ○ | ○ | ○ | ○ | ○ | ○ | ○ | ○ | ○ | ○ | ○ | ○ | ○ | 72 |
| LIFT LOCK VALVE WIRE HARNESS [VLL]<br>ﾘﾌﾄﾛｯｸﾊﾞﾙﾌﾞﾜｲﾔﾊｰﾈｽ | ○ | ○ | ○ | ○ | ○ | ○ | ○ | ○ | ○ | ○ | ○ | ○ | ○ | ○ | ○ | ○ | ○ | ○ | ○ | ○ | 73 |
| AMMETER [AM]<br>ｱﾝﾒｰﾀ | ○ | ○ | ○ | ○ | ○ | ○ | ○ | ○ | ○ | ○ | ○ | ○ | ○ | ○ | ○ | ○ | ○ | ○ | ○ | ○ | 74 |
| SPEED METER [SM]<br>ｽﾋﾟｰﾄﾞﾒｰﾀ | ○ | ○ | ○ | ○ | ○ | ○ | ○ | ○ | ○ | ○ | ○ | ○ | ○ | ○ | ○ | ○ | ○ | ○ | ○ | ○ | 75 |
| TORQUE CONVERTER THERMOMETER [TTM]<br>ﾄﾙｸｺﾝﾊﾞｰﾀｻｰﾓﾒｰﾀ | | ○ | | ○ | | ○ | | ○ | | | | ○ | | ○ | | ○ | | ○ | | | 76 |
| TORQUE CONVERTER PRESSURE METER [TPM]<br>ﾄﾙｸｺﾝﾊﾞｰﾀﾌﾟﾚｯｼｬﾒｰﾀ | | ○ | | ○ | | ○ | | ○ | | | | ○ | | ○ | | ○ | | ○ | | | 77 |
| SPEED DETECTOR UNIT [SAS]<br>ｽﾋﾟｰﾄﾞﾃﾞｨﾃｸﾀﾕﾆｯﾄ | ○ | ○ | ○ | ○ | ○ | ○ | ○ | ○ | ○ | ○ | ○ | ○ | ○ | ○ | ○ | ○ | ○ | ○ | ○ | ○ | 78 |
| SPEED ALARM SYSTEM [SASB]<br>ｽﾋﾟｰﾄﾞｱﾗｰﾑｼｽﾃﾑ | ○ | ○ | ○ | ○ | ○ | ○ | ○ | ○ | ○ | ○ | ○ | ○ | ○ | ○ | ○ | ○ | ○ | ○ | ○ | ○ | 79 |
| SPEED ALARM SYSTEM [SASR]<br>ｽﾋﾟｰﾄﾞｱﾗｰﾑｼｽﾃﾑ | ○ | ○ | ○ | ○ | ○ | ○ | ○ | ○ | ○ | ○ | ○ | ○ | ○ | ○ | ○ | ○ | ○ | ○ | ○ | ○ | 80 |
| SPEED ALARM SYSTEM [SASC]<br>ｽﾋﾟｰﾄﾞｱﾗｰﾑｼｽﾃﾑ | ○ | ○ | ○ | ○ | ○ | ○ | ○ | ○ | ○ | ○ | ○ | ○ | ○ | ○ | ○ | ○ | ○ | ○ | ○ | ○ | 81 |
| OK MONITOR [OKM]<br>OKﾓﾆﾀ | ○ | ○ | ○ | ○ | ○ | ○ | ○ | ○ | ○ | ○ | ○ | ○ | ○ | ○ | ○ | ○ | ○ | ○ | ○ | ○ | 82 |
| INTERLOCK (GASOLINE:CLUTCH & OIL CLUTCH)[SIL][EXE][EXN]<br>ｲﾝﾀｰﾛｯｸ | ○ | | ○ | | ○ | | ○ | | ○ | ○ | | | | | | | | | | | 83 |
| INTERLOCK (GASOLINE:TOR-CON)[SIL][EXE][EXN]<br>ｲﾝﾀｰﾛｯｸ | | ○ | | ○ | | ○ | | ○ | | | | | | | | | | | | | 84 |

# CONTENTS　目次

## CHASSIS シャーシ

| | | | | | | | | | |
|---|---|---|---|---|---|---|---|---|---|
| a | FG20C13 | e | FG20C3 | i | FG20W3 | m | FD25C13 | q | FD25C3 |
| b | FG20T13 | f | FG20T3 | j | FG25W3 | n | FD25T13 | r | FD25T3 |
| c | FG25C13 | g | FG25C3 | k | FD20C13 | o | FD20C3 | s | FD20W3 |
| d | FG25T13 | h | FG25T3 | l | FD20T13 | p | FD20T3 | t | FD25W3 |

| SECTION　部門 | a | b | c | d | e | f | g | h | i | j | k | l | m | n | o | p | q | r | s | t | FIG.NO. |
|---|---|---|---|---|---|---|---|---|---|---|---|---|---|---|---|---|---|---|---|---|---|
| INTERLOCK (DIESEL:CLUTCH & OIL CLUTCH)[SIL][EXE][EXN]<br>ｲﾝﾀｰﾛｯｸ | | | | | | | | | | | ○ | | ○ | | ○ | | ○ | | ○ | ○ | 85 |
| INTERLOCK (DIESEL:TOR-CON)[SIL][EXE][EXN]<br>ｲﾝﾀｰﾛｯｸ | | | | | | | | | | | | ○ | | ○ | | ○ | | ○ | | | 86 |
| DRIVE AXLE<br>ﾄﾞﾗｲﾌﾞｱｸｽﾙ | ○ | ○ | ○ | ○ | ○ | ○ | ○ | ○ | ○ | ○ | ○ | ○ | ○ | ○ | ○ | ○ | ○ | ○ | ○ | ○ | 87 |
| DRUM HUB<br>ﾄﾞﾗﾑﾊﾌﾞ | ○ | ○ | ○ | ○ | ○ | ○ | ○ | ○ | ○ | ○ | ○ | ○ | ○ | ○ | ○ | ○ | ○ | ○ | ○ | ○ | 88 |
| PROPELLER SHAFT<br>ﾌﾟﾛﾍﾟﾗｼｬﾌﾄ | ○ | ○ | ○ | ○ | ○ | ○ | ○ | ○ | ○ | ○ | ○ | ○ | ○ | ○ | ○ | ○ | ○ | ○ | ○ | ○ | 89 |
| REDUCTION & DIFFERENTIAL<br>ﾘﾀﾞｸｼｮﾝ&ﾃﾞｨﾌｧﾚﾝｼｬﾙ | ○ | ○ | ○ | ○ | ○ | ○ | ○ | ○ | ○ | ○ | ○ | ○ | ○ | ○ | ○ | ○ | ○ | ○ | ○ | ○ | 90 |
| REDUCTION<br>ﾘﾀﾞｸｼｮﾝ | ○ | ○ | ○ | ○ | ○ | ○ | ○ | ○ | ○ | ○ | ○ | ○ | ○ | ○ | ○ | ○ | ○ | ○ | ○ | ○ | 91 |
| DIFFERENTIAL<br>ﾃﾞｨﾌｧﾚﾝｼｬﾙ | ○ | ○ | ○ | ○ | ○ | ○ | ○ | ○ | ○ | ○ | ○ | ○ | ○ | ○ | ○ | ○ | ○ | ○ | ○ | ○ | 92 |
| WHEEL BRAKE<br>ﾎｲｰﾙﾌﾞﾚｰｷ | ○ | ○ | ○ | ○ | ○ | ○ | ○ | ○ | ○ | ○ | ○ | ○ | ○ | ○ | ○ | ○ | ○ | ○ | ○ | ○ | 93 |
| STEERING WHEEL UNIT<br>ｽﾃｱﾘﾝｸﾞﾎｲｰﾙﾕﾆｯﾄ | ○ | ○ | ○ | ○ | ○ | ○ | ○ | ○ | ○ | ○ | ○ | ○ | ○ | ○ | ○ | ○ | ○ | ○ | ○ | ○ | 94 |
| ORBITROL<br>ｵｰﾋﾞｯﾄﾛｰﾙ | ○ | ○ | ○ | ○ | ○ | ○ | ○ | ○ | ○ | ○ | ○ | ○ | ○ | ○ | ○ | ○ | ○ | ○ | ○ | ○ | 95 |
| ORBITROL [EXE][EXK][EXN]<br>ｵｰﾋﾞｯﾄﾛｰﾙ | | | | | ○ | ○ | ○ | ○ | | | | | | | ○ | ○ | ○ | ○ | | | 96 |
| ORBITROL FITTING<br>ｵｰﾋﾞｯﾄﾛｰﾙﾌｨｯﾃｨﾝｸﾞ | ○ | ○ | ○ | ○ | ○ | ○ | ○ | ○ | ○ | ○ | ○ | ○ | ○ | ○ | ○ | ○ | ○ | ○ | ○ | ○ | 97 |
| STEERING AXLE<br>ｽﾃｱﾘﾝｸﾞｱｸｽﾙ | ○ | ○ | ○ | ○ | ○ | ○ | ○ | ○ | ○ | ○ | ○ | ○ | ○ | ○ | ○ | ○ | ○ | ○ | ○ | ○ | 98 |
| STEERING AXLE [EXE][EXK][EXN]<br>ｽﾃｱﾘﾝｸﾞｱｸｽﾙ | | | | | ○ | ○ | ○ | ○ | | | | | | | ○ | ○ | ○ | ○ | | | 99 |
| AXLE SUPPORT<br>ｱｸｽﾙｻﾎﾟｰﾄ | ○ | ○ | ○ | ○ | ○ | ○ | ○ | ○ | ○ | ○ | ○ | ○ | ○ | ○ | ○ | ○ | ○ | ○ | ○ | ○ | 100 |
| HUB NUT<br>ﾊﾌﾞﾅｯﾄ | ○ | ○ | ○ | ○ | ○ | ○ | ○ | ○ | ○ | ○ | ○ | ○ | ○ | ○ | ○ | ○ | ○ | ○ | ○ | ○ | 101 |
| FENDER [DD][SDD][TUJSF]<br>ﾌｪﾝﾀﾞ | ○ | ○ | ○ | ○ | ○ | ○ | ○ | ○ | ○ | ○ | ○ | ○ | ○ | ○ | ○ | ○ | ○ | ○ | ○ | ○ | 102 |
| FRONT WHEEL<br>ﾌﾛﾝﾄﾎｲｰﾙ | ○ | ○ | ○ | ○ | ○ | ○ | ○ | ○ | ○ | ○ | ○ | ○ | ○ | ○ | ○ | ○ | ○ | ○ | ○ | ○ | 103 |
| FRONT WHEEL [DR F]<br>ﾌﾛﾝﾄﾎｲｰﾙ | ○ | ○ | ○ | ○ | ○ | ○ | ○ | ○ | ○ | ○ | ○ | ○ | ○ | ○ | ○ | ○ | ○ | ○ | ○ | ○ | 104 |
| FRONT WHEEL [TJ F][TJSF][T F][TS F]<br>ﾌﾛﾝﾄﾎｲｰﾙ | ○ | ○ | ○ | ○ | ○ | ○ | ○ | ○ | ○ | ○ | ○ | ○ | ○ | ○ | ○ | ○ | ○ | ○ | ○ | ○ | 105 |

# CONTENTS　目次

## CHASSIS シャーシ

| | | | | | | | | | |
|---|---|---|---|---|---|---|---|---|---|
| a | FG20C13 | e | FG20C3 | i | FG20W3 | m | FD25C13 | q | FD25C3 |
| b | FG20T13 | f | FG20T3 | j | FG25W3 | n | FD25T13 | r | FD25T3 |
| c | FG25C13 | g | FG25C3 | k | FD20C13 | o | FD20C3 | s | FD20W3 |
| d | FG25T13 | h | FG25T3 | l | FD20T13 | p | FD20T3 | t | FD25W3 |

| SECTION　部門 | a | b | c | d | e | f | g | h | i | j | k | l | m | n | o | p | q | r | s | t | FIG.NO. |
|---|---|---|---|---|---|---|---|---|---|---|---|---|---|---|---|---|---|---|---|---|---|
| FRONT WHEEL [(TJ F,TJSF,T F,TS F)/DR F]<br>ﾌﾛﾝﾄﾎｲｰﾙ | ○ | ○ | ○ | ○ | ○ | ○ | ○ | ○ | ○ | ○ | ○ | ○ | ○ | ○ | ○ | ○ | ○ | ○ | ○ | ○ | 106 |
| FRONT WHEEL [TSUF][TUJF][TUSF][TUWF][TUGF]<br>ﾌﾛﾝﾄﾎｲｰﾙ | ○ | ○ | ○ | ○ | ○ | ○ | ○ | ○ | ○ | ○ | ○ | ○ | ○ | ○ | ○ | ○ | ○ | ○ | ○ | ○ | 107 |
| FRONT WHEEL [TUJF/DR F]<br>ﾌﾛﾝﾄﾎｲｰﾙ | ○ | ○ | ○ | ○ | ○ | ○ | ○ | ○ | ○ | ○ | ○ | ○ | ○ | ○ | ○ | ○ | ○ | ○ | ○ | ○ | 108 |
| FRONT WHEEL [TRAF]<br>ﾌﾛﾝﾄﾎｲｰﾙ | ○ | ○ | ○ | ○ | ○ | ○ | ○ | ○ | ○ | ○ | ○ | ○ | ○ | ○ | ○ | ○ | ○ | ○ | ○ | ○ | 109 |
| FRONT WHEEL [TUJSF]<br>ﾌﾛﾝﾄﾎｲｰﾙ | ○ | ○ | ○ | ○ | ○ | ○ | ○ | ○ | ○ | ○ | ○ | ○ | ○ | ○ | ○ | ○ | ○ | ○ | ○ | ○ | 110 |
| FRONT WHEEL [TJ W][TJSW][T W][TS W]<br>ﾌﾛﾝﾄﾎｲｰﾙ | ○ | ○ | ○ | ○ | ○ | ○ | ○ | ○ | ○ | ○ | ○ | ○ | ○ | ○ | ○ | ○ | ○ | ○ | ○ | ○ | 111 |
| FRONT WHEEL [TUJW][TUSW][TUWW][TUGW]<br>ﾌﾛﾝﾄﾎｲｰﾙ | ○ | ○ | ○ | ○ | ○ | ○ | ○ | ○ | ○ | ○ | ○ | ○ | ○ | ○ | ○ | ○ | ○ | ○ | ○ | ○ | 112 |
| FRONT WHEEL [TJ W70][TJSW70][T W70][TS W70]<br>ﾌﾛﾝﾄﾎｲｰﾙ | ○ | ○ | ○ | ○ | ○ | ○ | ○ | ○ | ○ | ○ | ○ | ○ | ○ | ○ | ○ | ○ | ○ | ○ | ○ | ○ | 113 |
| FRONT WHEEL [TUJW70][TUSW70][TUWW70][TUGW70]<br>ﾌﾛﾝﾄﾎｲｰﾙ | ○ | ○ | ○ | ○ | ○ | ○ | ○ | ○ | ○ | ○ | ○ | ○ | ○ | ○ | ○ | ○ | ○ | ○ | ○ | ○ | 114 |
| REAR WHEEL<br>ﾘﾔｰﾎｲｰﾙ | ○ | ○ | ○ | ○ | ○ | ○ | ○ | ○ | ○ | ○ | ○ | ○ | ○ | ○ | ○ | ○ | ○ | ○ | ○ | ○ | 115 |
| REAR WHEEL [DR R]<br>ﾘﾔｰﾎｲｰﾙ | ○ | ○ | ○ | ○ | ○ | ○ | ○ | ○ | ○ | ○ | ○ | ○ | ○ | ○ | ○ | ○ | ○ | ○ | ○ | ○ | 116 |
| REAR WHEEL [TJ R][TJSR][T R][TS R]<br>ﾘﾔｰﾎｲｰﾙ | ○ | ○ | ○ | ○ | ○ | ○ | ○ | ○ | ○ | ○ | ○ | ○ | ○ | ○ | ○ | ○ | ○ | ○ | ○ | ○ | 117 |
| REAR WHEEL [(TJ R,TJSR,T R,TS R)/DR R]<br>ﾘﾔｰﾎｲｰﾙ | ○ | ○ | ○ | ○ | ○ | ○ | ○ | ○ | ○ | ○ | ○ | ○ | ○ | ○ | ○ | ○ | ○ | ○ | ○ | ○ | 118 |
| REAR WHEEL [TSUR][TUJR][TUSR][TUWR][TUGR]<br>ﾘﾔｰﾎｲｰﾙ | ○ | ○ | ○ | ○ | ○ | ○ | ○ | ○ | ○ | ○ | ○ | ○ | ○ | ○ | ○ | ○ | ○ | ○ | ○ | ○ | 119 |
| REAR WHEEL [TUJR/DR R]<br>ﾘﾔｰﾎｲｰﾙ | ○ | ○ | ○ | ○ | ○ | ○ | ○ | ○ | ○ | ○ | ○ | ○ | ○ | ○ | ○ | ○ | ○ | ○ | ○ | ○ | 120 |
| REAR WHEEL [TRAR]<br>ﾘﾔｰﾎｲｰﾙ | ○ | ○ | ○ | ○ | ○ | ○ | ○ | ○ | ○ | ○ | ○ | ○ | ○ | ○ | ○ | ○ | ○ | ○ | ○ | ○ | 121 |
| POWER CYLINDER<br>ﾊﾟﾜｰｼﾘﾝﾀﾞ | ○ | ○ | ○ | ○ | ○ | ○ | ○ | ○ | ○ | ○ | ○ | ○ | ○ | ○ | ○ | ○ | ○ | ○ | ○ | ○ | 122 |
| OVERHEAD GUARD<br>ｵｰﾊﾞﾍｯﾄﾞｶﾞｰﾄﾞ | ○ | ○ | ○ | ○ | ○ | ○ | ○ | ○ | ○ | ○ | ○ | ○ | ○ | ○ | ○ | ○ | ○ | ○ | ○ | ○ | 123 |
| FRONT LAMP BRACKET<br>ﾌﾛﾝﾄﾗﾝﾌﾟﾌﾞﾗｹｯﾄ | ○ | ○ | ○ | ○ | ○ | ○ | ○ | ○ | ○ | ○ | ○ | ○ | ○ | ○ | ○ | ○ | ○ | ○ | ○ | ○ | 124 |
| FRONT LAMP BRACKET [HL][BKH]<br>ﾌﾛﾝﾄﾗﾝﾌﾟﾌﾞﾗｹｯﾄ | ○ | ○ | ○ | ○ | ○ | ○ | ○ | ○ | ○ | ○ | ○ | ○ | ○ | ○ | ○ | ○ | ○ | ○ | ○ | ○ | 125 |
| REAR LAMP COVER<br>ﾘﾔｰﾗﾝﾌﾟｶﾊﾞｰ | ○ | ○ | ○ | ○ | ○ | ○ | ○ | ○ | ○ | ○ | ○ | ○ | ○ | ○ | ○ | ○ | ○ | ○ | ○ | ○ | 126 |

# CONTENTS　目次

## CHASSIS シャーシ

| | | | | | | | | | | | |
|---|---|---|---|---|---|---|---|---|---|---|---|
| a | FG20C13 | e | FG20C3 | i | FG20W3 | m | FD25C13 | q | FD25C3 |
| b | FG20T13 | f | FG20T3 | j | FG25W3 | n | FD25T13 | r | FD25T3 |
| c | FG25C13 | g | FG25C3 | k | FD20C13 | o | FD20C3 | s | FD20W3 |
| d | FG25T13 | h | FG25T3 | l | FD20T13 | p | FD20T3 | t | FD25W3 |

| SECTION　部門 | a | b | c | d | e | f | g | h | i | j | k | l | m | n | o | p | q | r | s | t | FIG.NO. |
|---|---|---|---|---|---|---|---|---|---|---|---|---|---|---|---|---|---|---|---|---|---|
| REAR LAMP COVER [RRE]<br>ﾘﾔｰﾗﾝﾌﾟｶﾊﾞｰ | ○ | ○ | ○ | ○ | ○ | ○ | ○ | ○ | ○ | ○ | ○ | ○ | ○ | ○ | ○ | ○ | ○ | ○ | ○ | ○ | 127 |
| HEAD GUARD PARTS<br>ﾍｯﾄﾞｶﾞｰﾄﾞﾊﾟｰﾂ | ○ | ○ | ○ | ○ | ○ | ○ | ○ | ○ | ○ | ○ | ○ | ○ | ○ | ○ | ○ | ○ | ○ | ○ | ○ | ○ | 128 |
| ACCEL PEDAL (GASOLINE)<br>ｱｸｾﾙﾍﾟﾀﾞﾙ | ○ | ○ | ○ | ○ | ○ | ○ | ○ | ○ | ○ | ○ | | | | | | | | | | | 129 |
| ACCEL PEDAL (DIESEL)<br>ｱｸｾﾙﾍﾟﾀﾞﾙ | | | | | | | | | | | ○ | ○ | ○ | ○ | ○ | ○ | ○ | ○ | ○ | ○ | 130 |
| FOOT PEDAL (CLUTCH)<br>ﾌｯﾄﾍﾟﾀﾞﾙ | ○ | | ○ | | ○ | | ○ | | | | ○ | | ○ | | ○ | | ○ | | | | 131 |
| FOOT PEDAL (TOR-CON)<br>ﾌｯﾄﾍﾟﾀﾞﾙ | | ○ | | ○ | | ○ | | ○ | | | | ○ | | ○ | | ○ | | ○ | | | 132 |
| FOOT PEDAL (OIL CLUTCH)<br>ﾌｯﾄﾍﾟﾀﾞﾙ | | | | | | | | | ○ | ○ | | | | | | | | | ○ | ○ | 133 |
| FOOT PEDAL CYLINDER (CLUTCH)<br>ﾌｯﾄﾍﾟﾀﾞﾙｼﾘﾝﾀﾞ | ○ | | ○ | | ○ | | ○ | | | | ○ | | ○ | | ○ | | ○ | | | | 134 |
| FOOT PEDAL CYLINDER (TOR-CON)<br>ﾌｯﾄﾍﾟﾀﾞﾙｼﾘﾝﾀﾞ | | ○ | | ○ | | ○ | | ○ | | | | ○ | | ○ | | ○ | | ○ | | | 135 |
| FOOT PEDAL CYLINDER (OIL CLUTCH)<br>ﾌｯﾄﾍﾟﾀﾞﾙｼﾘﾝﾀﾞ | | | | | | | | | ○ | ○ | | | | | | | | | ○ | ○ | 136 |
| BRAKE PIPE (CLUTCH)<br>ﾌﾞﾚｰｷﾊﾟｲﾌﾟ | ○ | | ○ | | ○ | | ○ | | | | ○ | | ○ | | ○ | | ○ | | | | 137 |
| BRAKE PIPE (TOR-CON)<br>ﾌﾞﾚｰｷﾊﾟｲﾌﾟ | | ○ | | ○ | | ○ | | ○ | | | | ○ | | ○ | | ○ | | ○ | | | 138 |
| BRAKE PIPE (OIL CLUTCH)<br>ﾌﾞﾚｰｷﾊﾟｲﾌﾟ | | | | | | | | | ○ | ○ | | | | | | | | | ○ | ○ | 139 |
| FOOT PEDAL PARTS<br>ﾌｯﾄﾍﾟﾀﾞﾙﾊﾟｰﾂ | ○ | ○ | ○ | ○ | ○ | ○ | ○ | ○ | ○ | ○ | ○ | ○ | ○ | ○ | ○ | ○ | ○ | ○ | ○ | ○ | 140 |
| CLUTCH MASTER CYLINDER (CLUTCH)<br>ｸﾗｯﾁﾏｽﾀｼﾘﾝﾀﾞ | ○ | | ○ | | ○ | | ○ | | | | ○ | | ○ | | ○ | | ○ | | | | 141 |
| CLUTCH MASTER CYLINDER (OIL CLUTCH)<br>ｸﾗｯﾁﾏｽﾀｼﾘﾝﾀﾞ | | | | | | | | | ○ | ○ | | | | | | | | | ○ | ○ | 142 |
| BRAKE MASTER CYLINDER<br>ﾌﾞﾚｰｷﾏｽﾀｼﾘﾝﾀﾞ | ○ | ○ | ○ | ○ | ○ | ○ | ○ | ○ | ○ | ○ | ○ | ○ | ○ | ○ | ○ | ○ | ○ | ○ | ○ | ○ | 143 |
| CLUTCH RELEASE CYLINDER (CLUTCH)<br>ｸﾗｯﾁﾘﾘｰｽｼﾘﾝﾀﾞ | ○ | | ○ | | ○ | | ○ | | | | ○ | | ○ | | ○ | | ○ | | | | 144 |
| CLUTCH RELEASE CYLINDER (OIL CLUTCH)<br>ｸﾗｯﾁﾘﾘｰｽｼﾘﾝﾀﾞ | | | | | | | | | ○ | ○ | | | | | | | | | ○ | ○ | 145 |
| BRAKE LEVER<br>ﾌﾞﾚｰｷﾚﾊﾞｰ | ○ | ○ | ○ | ○ | ○ | ○ | ○ | ○ | ○ | ○ | ○ | ○ | ○ | ○ | ○ | ○ | ○ | ○ | ○ | ○ | 146 |
| FRAME<br>ﾌﾚｰﾑ | ○ | ○ | ○ | ○ | ○ | ○ | ○ | ○ | ○ | ○ | ○ | ○ | ○ | ○ | ○ | ○ | ○ | ○ | ○ | ○ | 147 |

# CONTENTS　目次

## CHASSIS シャーシ

| | | | | | | | | | |
|---|---|---|---|---|---|---|---|---|---|
| a | FG20C13 | e | FG20C3 | i | FG20W3 | m | FD25C13 | q | FD25C3 |
| b | FG20T13 | f | FG20T3 | j | FG25W3 | n | FD25T13 | r | FD25T3 |
| c | FG25C13 | g | FG25C3 | k | FD20C13 | o | FD20C3 | s | FD20W3 |
| d | FG25T13 | h | FG25T3 | l | FD20T13 | p | FD20T3 | t | FD25W3 |

| SECTION　部門 | a | b | c | d | e | f | g | h | i | j | k | l | m | n | o | p | q | r | s | t | FIG.NO. |
|---|---|---|---|---|---|---|---|---|---|---|---|---|---|---|---|---|---|---|---|---|---|
| OIL TANK<br>ｵｲﾙﾀﾝｸ | ○ | ○ | ○ | ○ | ○ | ○ | ○ | ○ | ○ | ○ | ○ | ○ | ○ | ○ | ○ | ○ | ○ | ○ | ○ | ○ | 148 |
| OIL CAP & LEVEL<br>ｵｲﾙｷｬｯﾌﾟ&ﾚﾍﾞﾙ | ○ | ○ | ○ | ○ | ○ | ○ | ○ | ○ | ○ | ○ | ○ | ○ | ○ | ○ | ○ | ○ | ○ | ○ | ○ | ○ | 149 |
| FUEL TANK (GASOLINE)<br>ﾌｭｰｴﾙﾀﾝｸ | ○ | ○ | ○ | ○ | ○ | ○ | ○ | ○ | ○ | ○ | | | | | | | | | | | 150 |
| FUEL TANK (DIESEL)<br>ﾌｭｰｴﾙﾀﾝｸ | | | | | | | | | | | ○ | ○ | ○ | ○ | ○ | ○ | ○ | ○ | ○ | ○ | 151 |
| BALANCE WEIGHT<br>ﾊﾞﾗﾝｽｳｴｲﾄ | ○ | ○ | ○ | ○ | ○ | ○ | ○ | ○ | ○ | ○ | ○ | ○ | ○ | ○ | ○ | ○ | ○ | ○ | ○ | ○ | 152 |
| BALANCE WEIGHT [HC]<br>ﾊﾞﾗﾝｽｳｴｲﾄ | ○ | ○ | ○ | ○ | ○ | ○ | ○ | ○ | ○ | ○ | ○ | ○ | ○ | ○ | ○ | ○ | ○ | ○ | ○ | ○ | 153 |
| FRONT GUARD<br>ﾌﾛﾝﾄｶﾞｰﾄﾞ | ○ | ○ | ○ | ○ | ○ | ○ | ○ | ○ | ○ | ○ | ○ | ○ | ○ | ○ | ○ | ○ | ○ | ○ | ○ | ○ | 154 |
| BONNET<br>ﾎﾞﾝﾈｯﾄ | ○ | ○ | ○ | ○ | ○ | ○ | ○ | ○ | ○ | ○ | ○ | ○ | ○ | ○ | ○ | ○ | ○ | ○ | ○ | ○ | 155 |
| RADIATOR COVER<br>ﾗｼﾞｴｰﾀｶﾊﾞｰ | ○ | ○ | ○ | ○ | ○ | ○ | ○ | ○ | ○ | ○ | ○ | ○ | ○ | ○ | ○ | ○ | ○ | ○ | ○ | ○ | 156 |
| BONNET HINGE<br>ﾎﾞﾝﾈｯﾄﾋﾝｼﾞ | ○ | ○ | ○ | ○ | ○ | ○ | ○ | ○ | ○ | ○ | ○ | ○ | ○ | ○ | ○ | ○ | ○ | ○ | ○ | ○ | 157 |
| FLOOR BOARD<br>ﾌﾛｱﾎﾞｰﾄﾞ | ○ | ○ | ○ | ○ | ○ | ○ | ○ | ○ | ○ | ○ | ○ | ○ | ○ | ○ | ○ | ○ | ○ | ○ | ○ | ○ | 158 |
| STEP & FLOOR MAT<br>ｽﾃｯﾌﾟ&ﾌﾛｱﾏｯﾄ | ○ | ○ | ○ | ○ | ○ | ○ | ○ | ○ | ○ | ○ | ○ | ○ | ○ | ○ | ○ | ○ | ○ | ○ | ○ | ○ | 159 |
| FRONT COVER (CLUTCH)(OIL CLUTCH)<br>ﾌﾛﾝﾄｶﾊﾞｰ | ○ | | ○ | | ○ | | ○ | | ○ | ○ | ○ | | ○ | | ○ | | ○ | | ○ | ○ | 160 |
| FRONT COVER (TOR-CON)<br>ﾌﾛﾝﾄｶﾊﾞｰ | | ○ | | ○ | | ○ | | ○ | | | | ○ | | ○ | | ○ | | ○ | | | 161 |
| FRONT COVER (TOR-CON):[EXN]<br>ﾌﾛﾝﾄｶﾊﾞｰ | | | | | | ○ | | ○ | | | | | | | | ○ | | ○ | | | 162 |
| SIDE COVER<br>ｻｲﾄﾞｶﾊﾞｰ | ○ | ○ | ○ | ○ | ○ | ○ | ○ | ○ | ○ | ○ | ○ | ○ | ○ | ○ | ○ | ○ | ○ | ○ | ○ | ○ | 163 |
| SIDE COVER [SCB001][SCBCR]<br>ｻｲﾄﾞｶﾊﾞｰ | | | | | ○ | ○ | ○ | ○ | ○ | ○ | | | | | ○ | ○ | ○ | ○ | ○ | ○ | 164 |
| FRONT SIDE COVER<br>ﾌﾛﾝﾄｻｲﾄﾞｶﾊﾞｰ | ○ | ○ | ○ | ○ | ○ | ○ | ○ | ○ | ○ | ○ | ○ | ○ | ○ | ○ | ○ | ○ | ○ | ○ | ○ | ○ | 165 |
| SEAT<br>ｼｰﾄ | ○ | ○ | ○ | ○ | ○ | ○ | ○ | ○ | ○ | ○ | ○ | ○ | ○ | ○ | ○ | ○ | ○ | ○ | ○ | ○ | 166 |
| SEAT [HGL]<br>ｼｰﾄ | ○ | ○ | ○ | ○ | ○ | ○ | ○ | ○ | ○ | ○ | ○ | ○ | ○ | ○ | ○ | ○ | ○ | ○ | ○ | ○ | 167 |
| PUMP UNIT (CLUTCH)(TOR-CON)<br>ﾎﾟﾝﾌﾟﾕﾆｯﾄ | ○ | ○ | ○ | ○ | ○ | ○ | ○ | ○ | | | ○ | ○ | ○ | ○ | ○ | ○ | ○ | ○ | | | 168 |

# CONTENTS　目次

## CHASSIS シャーシ

| | | | | | | | | | | | |
|---|---|---|---|---|---|---|---|---|---|---|---|
| a | FG20C13 | e | FG20C3 | i | FG20W3 | m | FD25C13 | q | FD25C3 |
| b | FG20T13 | f | FG20T3 | j | FG25W3 | n | FD25T13 | r | FD25T3 |
| c | FG25C13 | g | FG25C3 | k | FD20C13 | o | FD20C3 | s | FD20W3 |
| d | FG25T13 | h | FG25T3 | l | FD20T13 | p | FD20T3 | t | FD25W3 |

| SECTION　部門 | a | b | c | d | e | f | g | h | i | j | k | l | m | n | o | p | q | r | s | t | FIG.NO. |
|---|---|---|---|---|---|---|---|---|---|---|---|---|---|---|---|---|---|---|---|---|---|
| PUMP UNIT (OIL CLUTCH)<br>ﾎﾟﾝﾌﾟﾕﾆｯﾄ | | | | | | | | | ○ | ○ | | | | | | | | | ○ | ○ | 169 |
| CONTROL VALVE [2SV]<br>ｺﾝﾄﾛｰﾙﾊﾞﾙﾌﾞ | ○ | ○ | ○ | ○ | ○ | ○ | ○ | ○ | ○ | ○ | ○ | ○ | ○ | ○ | ○ | ○ | ○ | ○ | ○ | ○ | 170 |
| CONTROL VALVE [3SV]<br>ｺﾝﾄﾛｰﾙﾊﾞﾙﾌﾞ | ○ | ○ | ○ | ○ | ○ | ○ | ○ | ○ | ○ | ○ | ○ | ○ | ○ | ○ | ○ | ○ | ○ | ○ | ○ | ○ | 171 |
| CONTROL VALVE [4SV]<br>ｺﾝﾄﾛｰﾙﾊﾞﾙﾌﾞ | ○ | ○ | ○ | ○ | ○ | ○ | ○ | ○ | ○ | ○ | ○ | ○ | ○ | ○ | ○ | ○ | ○ | ○ | ○ | ○ | 172 |
| CONTROL VALVE [5SV]<br>ｺﾝﾄﾛｰﾙﾊﾞﾙﾌﾞ | ○ | ○ | ○ | ○ | ○ | ○ | ○ | ○ | ○ | ○ | ○ | ○ | ○ | ○ | ○ | ○ | ○ | ○ | ○ | ○ | 173 |
| CONTROL VALVE FITTING<br>ｺﾝﾄﾛｰﾙﾊﾞﾙﾌﾞﾌｨｯﾃｨﾝｸﾞ | ○ | ○ | ○ | ○ | ○ | ○ | ○ | ○ | ○ | ○ | ○ | ○ | ○ | ○ | ○ | ○ | ○ | ○ | ○ | ○ | 174 |
| VALVE CONTROL [2SV]<br>ﾊﾞﾙﾌﾞｺﾝﾄﾛｰﾙ | ○ | ○ | ○ | ○ | ○ | ○ | ○ | ○ | ○ | ○ | ○ | ○ | ○ | ○ | ○ | ○ | ○ | ○ | ○ | ○ | 175 |
| VALVE CONTROL [3SV]<br>ﾊﾞﾙﾌﾞｺﾝﾄﾛｰﾙ | ○ | ○ | ○ | ○ | ○ | ○ | ○ | ○ | ○ | ○ | ○ | ○ | ○ | ○ | ○ | ○ | ○ | ○ | ○ | ○ | 176 |
| VALVE CONTROL [4SV]<br>ﾊﾞﾙﾌﾞｺﾝﾄﾛｰﾙ | ○ | ○ | ○ | ○ | ○ | ○ | ○ | ○ | ○ | ○ | ○ | ○ | ○ | ○ | ○ | ○ | ○ | ○ | ○ | ○ | 177 |
| VALVE CONTROL [5SV]<br>ﾊﾞﾙﾌﾞｺﾝﾄﾛｰﾙ | ○ | ○ | ○ | ○ | ○ | ○ | ○ | ○ | ○ | ○ | ○ | ○ | ○ | ○ | ○ | ○ | ○ | ○ | ○ | ○ | 178 |
| VALVE CONTROL KNOB<br>ﾊﾞﾙﾌﾞｺﾝﾄﾛｰﾙﾉﾌﾞ | ○ | ○ | ○ | ○ | ○ | ○ | ○ | ○ | ○ | ○ | ○ | ○ | ○ | ○ | ○ | ○ | ○ | ○ | ○ | ○ | 179 |
| HYDRAULIC LINE (MAIN)(1/4)(GASOLINE:CLUTCH & TOR-CON)<br>ﾊｲﾄﾞﾛﾘｯｸﾗｲﾝ(ﾒｲﾝ)(1/4) | ○ | ○ | ○ | ○ | ○ | ○ | ○ | ○ | | | | | | | | | | | | | 180 |
| HYDRAULIC LINE (MAIN)(1/4)(GASOLINE:OIL CLUTCH)<br>ﾊｲﾄﾞﾛﾘｯｸﾗｲﾝ(ﾒｲﾝ)(1/4) | | | | | | | | | ○ | ○ | | | | | | | | | | | 181 |
| HYDRAULIC LINE (MAIN)(1/4)(DIESEL:CLUTCH & TOR-CON)<br>ﾊｲﾄﾞﾛﾘｯｸﾗｲﾝ(ﾒｲﾝ)(1/4) | | | | | | | | | | | ○ | ○ | ○ | ○ | ○ | ○ | ○ | ○ | | | 182 |
| HYDRAULIC LINE (MAIN)(1/4)(DIESEL:OIL CLUTCH)<br>ﾊｲﾄﾞﾛﾘｯｸﾗｲﾝ(ﾒｲﾝ)(1/4) | | | | | | | | | | | | | | | | | | | ○ | ○ | 183 |
| HYDRAULIC LINE (MAIN)(2/4)<br>ﾊｲﾄﾞﾛﾘｯｸﾗｲﾝ(ﾒｲﾝ)(2/4) | ○ | ○ | ○ | ○ | ○ | ○ | ○ | ○ | ○ | ○ | ○ | ○ | ○ | ○ | ○ | ○ | ○ | ○ | ○ | ○ | 184 |
| HYDRAULIC LINE (MAIN)(3/4)(CLUTCH)(TOR-CON)<br>ﾊｲﾄﾞﾛﾘｯｸﾗｲﾝ(ﾒｲﾝ)(3/4) | ○ | ○ | ○ | ○ | ○ | ○ | ○ | ○ | | | ○ | ○ | ○ | ○ | ○ | ○ | ○ | ○ | | | 185 |
| HYDRAULIC LINE (MAIN)(3/4)(OIL CLUTCH)<br>ﾊｲﾄﾞﾛﾘｯｸﾗｲﾝ(ﾒｲﾝ)(3/4) | | | | | | | | | ○ | ○ | | | | | | | | | ○ | ○ | 186 |
| HYDRAULIC LINE (MAIN)(4/4)<br>ﾊｲﾄﾞﾛﾘｯｸﾗｲﾝ(ﾒｲﾝ)(4/4) | ○ | ○ | ○ | ○ | ○ | ○ | ○ | ○ | ○ | ○ | ○ | ○ | ○ | ○ | ○ | ○ | ○ | ○ | ○ | ○ | 187 |
| HYDRAULIC LINE (TOR-CON)<br>ﾊｲﾄﾞﾛﾘｯｸﾗｲﾝ(ﾄﾙｺﾝ) | | ○ | | ○ | | ○ | | ○ | | | | ○ | | ○ | | ○ | | ○ | | | 188 |
| HYDRAULIC LINE (OIL CLUTCH)<br>ﾊｲﾄﾞﾛﾘｯｸﾗｲﾝ(ｵｲﾙｸﾗｯﾁ) | | | | | | | | | ○ | ○ | | | | | | | | | ○ | ○ | 189 |

# CONTENTS　目次

## CHASSIS シャーシ

| | | | | | | | | | |
|---|---|---|---|---|---|---|---|---|---|
| a | FG20C13 | e | FG20C3 | i | FG20W3 | m | FD25C13 | q | FD25C3 |
| b | FG20T13 | f | FG20T3 | j | FG25W3 | n | FD25T13 | r | FD25T3 |
| c | FG25C13 | g | FG25C3 | k | FD20C13 | o | FD20C3 | s | FD20W3 |
| d | FG25T13 | h | FG25T3 | l | FD20T13 | p | FD20T3 | t | FD25W3 |

| SECTION　部門 | a | b | c | d | e | f | g | h | i | j | k | l | m | n | o | p | q | r | s | t | FIG.NO. |
|---|---|---|---|---|---|---|---|---|---|---|---|---|---|---|---|---|---|---|---|---|---|
| TILT CYLINDER<br>ﾃｨﾙﾄｼﾘﾝﾀﾞ | ○ | ○ | ○ | ○ | ○ | ○ | ○ | ○ | ○ | ○ | ○ | ○ | ○ | ○ | ○ | ○ | ○ | ○ | ○ | ○ | 190 |
| TILT CYLINDER BOOT [TLB][FC]<br>ﾃｨﾙﾄｼﾘﾝﾀﾞﾌﾞｰﾂ | ○ | ○ | ○ | ○ | ○ | ○ | ○ | ○ | ○ | ○ | ○ | ○ | ○ | ○ | ○ | ○ | ○ | ○ | ○ | ○ | 191 |
| DECAL (1/2)<br>ﾃﾞｶﾙ(1/2) | ○ | ○ | ○ | ○ | ○ | ○ | ○ | ○ | ○ | ○ | ○ | ○ | ○ | ○ | ○ | ○ | ○ | ○ | ○ | ○ | 192 |
| DECAL (2/2)<br>ﾃﾞｶﾙ(2/2) | ○ | ○ | ○ | ○ | ○ | ○ | ○ | ○ | ○ | ○ | ○ | ○ | ○ | ○ | ○ | ○ | ○ | ○ | ○ | ○ | 193 |
| DECAL (2/2)[EXB]<br>ﾃﾞｶﾙ(2/2) | | | | | ○ | ○ | ○ | ○ | | | | | | | ○ | ○ | ○ | ○ | | | 194 |
| DECAL (2/2)[EXC]<br>ﾃﾞｶﾙ(2/2) | | | | | ○ | ○ | ○ | ○ | | | | | | | ○ | ○ | ○ | ○ | | | 195 |
| DECAL (2/2)[EXE]<br>ﾃﾞｶﾙ(2/2) | | | | | ○ | ○ | ○ | ○ | | | | | | | ○ | ○ | ○ | ○ | | | 196 |
| DECAL (2/2)[EXK]<br>ﾃﾞｶﾙ(2/2) | | | | | ○ | ○ | ○ | ○ | | | | | | | ○ | ○ | ○ | ○ | | | 197 |
| DECAL (2/2)[EXN]<br>ﾃﾞｶﾙ(2/2) | | | | | ○ | ○ | ○ | ○ | | | | | | | ○ | ○ | ○ | ○ | | | 198 |
| SERVICE TOOL [TO][EX]<br>ｻｰﾋﾞｽﾂｰﾙ | ○ | ○ | ○ | ○ | ○ | ○ | ○ | ○ | ○ | ○ | ○ | ○ | ○ | ○ | ○ | ○ | ○ | ○ | ○ | ○ | 199 |

# CONTENTS　目次

## MAST マスト

| | | | | | | | | | |
|---|---|---|---|---|---|---|---|---|---|
| a | FG20C13 | e | FG20C3 | i | FG20W3 | m | FD25C13 | q | FD25C3 |
| b | FG20T13 | f | FG20T3 | j | FG25W3 | n | FD25T13 | r | FD25T3 |
| c | FG25C13 | g | FG25C3 | k | FD20C13 | o | FD20C3 | s | FD20W3 |
| d | FG25T13 | h | FG25T3 | l | FD20T13 | p | FD20T3 | t | FD25W3 |

| SECTION　部門 | a | b | c | d | e | f | g | h | i | j | k | l | m | n | o | p | q | r | s | t | FIG.NO. |
|---|---|---|---|---|---|---|---|---|---|---|---|---|---|---|---|---|---|---|---|---|---|
| [VM2N5] | | | | | | | | | | | | | | | | | | | | | |
| FORK [VM2N5]<br>ﾌｫｰｸ | ○ | ○ | ○ | ○ | ○ | ○ | ○ | ○ | ○ | ○ | ○ | ○ | ○ | ○ | ○ | ○ | ○ | ○ | ○ | ○ | 200 |
| LIFT BRACKET [VM2N5]<br>ﾘﾌﾄﾌﾞﾗｹｯﾄ | ○ | ○ | ○ | ○ | ○ | ○ | ○ | ○ | ○ | ○ | ○ | ○ | ○ | ○ | ○ | ○ | ○ | ○ | ○ | ○ | 201 |
| BACKREST [VM2N5]<br>ﾊﾞｯｸﾚｽﾄ | ○ | ○ | ○ | ○ | ○ | ○ | ○ | ○ | ○ | ○ | ○ | ○ | ○ | ○ | ○ | ○ | ○ | ○ | ○ | ○ | 202 |
| MAST [VM2N5]<br>ﾏｽﾄ | ○ | ○ | ○ | ○ | ○ | ○ | ○ | ○ | ○ | ○ | ○ | ○ | ○ | ○ | ○ | ○ | ○ | ○ | ○ | ○ | 203 |
| LIFT CYLINDER [VM2N5]<br>ﾘﾌﾄｼﾘﾝﾀﾞ | ○ | ○ | ○ | ○ | ○ | ○ | ○ | ○ | ○ | ○ | ○ | ○ | ○ | ○ | ○ | ○ | ○ | ○ | ○ | ○ | 204 |
| MAST PIPING [VM2N5]<br>ﾏｽﾄﾊﾟｲﾋﾟﾝｸﾞ | ○ | ○ | ○ | ○ | ○ | ○ | ○ | ○ | ○ | ○ | ○ | ○ | ○ | ○ | ○ | ○ | ○ | ○ | ○ | ○ | 205 |
| | | | | | | | | | | | | | | | | | | | | | |
| [VFM2N5] | | | | | | | | | | | | | | | | | | | | | |
| FORK [VFM2N5]<br>ﾌｫｰｸ | ○ | ○ | ○ | ○ | ○ | ○ | ○ | ○ | ○ | ○ | ○ | ○ | ○ | ○ | ○ | ○ | ○ | ○ | ○ | ○ | 206 |
| LIFT BRACKET [VFM2N5]<br>ﾘﾌﾄﾌﾞﾗｹｯﾄ | ○ | ○ | ○ | ○ | ○ | ○ | ○ | ○ | ○ | ○ | ○ | ○ | ○ | ○ | ○ | ○ | ○ | ○ | ○ | ○ | 207 |
| BACKREST [VFM2N5]<br>ﾊﾞｯｸﾚｽﾄ | ○ | ○ | ○ | ○ | ○ | ○ | ○ | ○ | ○ | ○ | ○ | ○ | ○ | ○ | ○ | ○ | ○ | ○ | ○ | ○ | 208 |
| MAST [VFM2N5]<br>ﾏｽﾄ | ○ | ○ | ○ | ○ | ○ | ○ | ○ | ○ | ○ | ○ | ○ | ○ | ○ | ○ | ○ | ○ | ○ | ○ | ○ | ○ | 209 |
| TILT GAUGE [VFM2N5/(TG,PPC,PR,PRC,MPC)]<br>ﾃｨﾙﾄｹﾞｰｼﾞ | ○ | ○ | ○ | ○ | ○ | ○ | ○ | ○ | ○ | ○ | ○ | ○ | ○ | ○ | ○ | ○ | ○ | ○ | ○ | ○ | 210 |
| LIFT CYLINDER (FRONT) [VFM2N5]<br>ﾘﾌﾄｼﾘﾝﾀﾞ(ﾌﾛﾝﾄ) | ○ | ○ | ○ | ○ | ○ | ○ | ○ | ○ | ○ | ○ | ○ | ○ | ○ | ○ | ○ | ○ | ○ | ○ | ○ | ○ | 211 |
| LIFT CYLINDER (REAR) [VFM2N5]<br>ﾘﾌﾄｼﾘﾝﾀﾞ(ﾘﾔｰ) | ○ | ○ | ○ | ○ | ○ | ○ | ○ | ○ | ○ | ○ | ○ | ○ | ○ | ○ | ○ | ○ | ○ | ○ | ○ | ○ | 212 |
| MAST PIPING [VFM2N5]<br>ﾏｽﾄﾊﾟｲﾋﾟﾝｸﾞ | ○ | ○ | ○ | ○ | ○ | ○ | ○ | ○ | ○ | ○ | ○ | ○ | ○ | ○ | ○ | ○ | ○ | ○ | ○ | ○ | 213 |
| | | | | | | | | | | | | | | | | | | | | | |
| | | | | | | | | | | | | | | | | | | | | | |
| | | | | | | | | | | | | | | | | | | | | | |
| | | | | | | | | | | | | | | | | | | | | | |

# CONTENTS　目次

## MAST マスト

| | | | | | | | | | |
|---|---|---|---|---|---|---|---|---|---|
| a | FG20C13 | e | FG20C3 | i | FG20W3 | m | FD25C13 | q | FD25C3 |
| b | FG20T13 | f | FG20T3 | j | FG25W3 | n | FD25T13 | r | FD25T3 |
| c | FG25C13 | g | FG25C3 | k | FD20C13 | o | FD20C3 | s | FD20W3 |
| d | FG25T13 | h | FG25T3 | l | FD20T13 | p | FD20T3 | t | FD25W3 |

| SECTION　部門 | a | b | c | d | e | f | g | h | i | j | k | l | m | n | o | p | q | r | s | t | FIG.NO. |
|---|---|---|---|---|---|---|---|---|---|---|---|---|---|---|---|---|---|---|---|---|---|
| [VFHM2N5] | | | | | | | | | | | | | | | | | | | | | |
| FORK [VFHM2N5]<br>ﾌｫｰｸ | ○ | ○ | ○ | ○ | ○ | ○ | ○ | ○ | ○ | ○ | ○ | ○ | ○ | ○ | ○ | ○ | ○ | ○ | ○ | ○ | 214 |
| LIFT BRACKET [VFHM2N5]<br>ﾘﾌﾄﾌﾞﾗｹｯﾄ | ○ | ○ | ○ | ○ | ○ | ○ | ○ | ○ | ○ | ○ | ○ | ○ | ○ | ○ | ○ | ○ | ○ | ○ | ○ | ○ | 215 |
| BACKREST [VFHM2N5]<br>ﾊﾞｯｸﾚｽﾄ | ○ | ○ | ○ | ○ | ○ | ○ | ○ | ○ | ○ | ○ | ○ | ○ | ○ | ○ | ○ | ○ | ○ | ○ | ○ | ○ | 216 |
| MAST [VFHM2N5]<br>ﾏｽﾄ | ○ | ○ | ○ | ○ | ○ | ○ | ○ | ○ | ○ | ○ | ○ | ○ | ○ | ○ | ○ | ○ | ○ | ○ | ○ | ○ | 217 |
| TILT GAUGE [VFHM2N5/(TG,PPC,PR,PRC,MPC)]<br>ﾃｨﾙﾄｹﾞｰｼﾞ | ○ | ○ | ○ | ○ | ○ | ○ | ○ | ○ | ○ | ○ | ○ | ○ | ○ | ○ | ○ | ○ | ○ | ○ | ○ | ○ | 218 |
| LIFT CYLINDER (FRONT) [VFHM2N5]<br>ﾘﾌﾄｼﾘﾝﾀﾞ(ﾌﾛﾝﾄ) | ○ | ○ | ○ | ○ | ○ | ○ | ○ | ○ | ○ | ○ | ○ | ○ | ○ | ○ | ○ | ○ | ○ | ○ | ○ | ○ | 219 |
| LIFT CYLINDER (REAR) [VFHM2N5]<br>ﾘﾌﾄｼﾘﾝﾀﾞ(ﾘﾔｰ) | ○ | ○ | ○ | ○ | ○ | ○ | ○ | ○ | ○ | ○ | ○ | ○ | ○ | ○ | ○ | ○ | ○ | ○ | ○ | ○ | 220 |
| MAST PIPING [VFHM2N5]<br>ﾏｽﾄﾊﾟｲﾋﾟﾝｸﾞ | ○ | ○ | ○ | ○ | ○ | ○ | ○ | ○ | ○ | ○ | ○ | ○ | ○ | ○ | ○ | ○ | ○ | ○ | ○ | ○ | 221 |
| | | | | | | | | | | | | | | | | | | | | | |
| [VFHM2N4] | | | | | | | | | | | | | | | | | | | | | |
| FORK [VFHM2N4]<br>ﾌｫｰｸ | ○ | ○ | ○ | ○ | ○ | ○ | ○ | ○ | ○ | ○ | ○ | ○ | ○ | ○ | ○ | ○ | ○ | ○ | ○ | ○ | 222 |
| LIFT BRACKET [VFHM2N4]<br>ﾘﾌﾄﾌﾞﾗｹｯﾄ | ○ | ○ | ○ | ○ | ○ | ○ | ○ | ○ | ○ | ○ | ○ | ○ | ○ | ○ | ○ | ○ | ○ | ○ | ○ | ○ | 223 |
| BACKREST [VFHM2N4]<br>ﾊﾞｯｸﾚｽﾄ | ○ | ○ | ○ | ○ | ○ | ○ | ○ | ○ | ○ | ○ | ○ | ○ | ○ | ○ | ○ | ○ | ○ | ○ | ○ | ○ | 224 |
| MAST [VFHM2N4]<br>ﾏｽﾄ | ○ | ○ | ○ | ○ | ○ | ○ | ○ | ○ | ○ | ○ | ○ | ○ | ○ | ○ | ○ | ○ | ○ | ○ | ○ | ○ | 225 |
| LIFT CYLINDER(FRONT) [VFHM2N4]<br>ﾘﾌﾄｼﾘﾝﾀﾞ(ﾌﾛﾝﾄ) | ○ | ○ | ○ | ○ | ○ | ○ | ○ | ○ | ○ | ○ | ○ | ○ | ○ | ○ | ○ | ○ | ○ | ○ | ○ | ○ | 226 |
| LIFT CYLINDER(REAR) [VFHM2N4]<br>ﾘﾌﾄｼﾘﾝﾀﾞ(ﾘﾔｰ) | ○ | ○ | ○ | ○ | ○ | ○ | ○ | ○ | ○ | ○ | ○ | ○ | ○ | ○ | ○ | ○ | ○ | ○ | ○ | ○ | 227 |
| MAST PIPING [VFHM2N4]<br>ﾏｽﾄﾊﾟｲﾋﾟﾝｸﾞ | ○ | ○ | ○ | ○ | ○ | ○ | ○ | ○ | ○ | ○ | ○ | ○ | ○ | ○ | ○ | ○ | ○ | ○ | ○ | ○ | 228 |
| | | | | | | | | | | | | | | | | | | | | | |
| | | | | | | | | | | | | | | | | | | | | | |
| | | | | | | | | | | | | | | | | | | | | | |

# M E M O

# FIG.1 ENGINE MOUNT (GASOLINE)

(F7021010) エンジンマウント

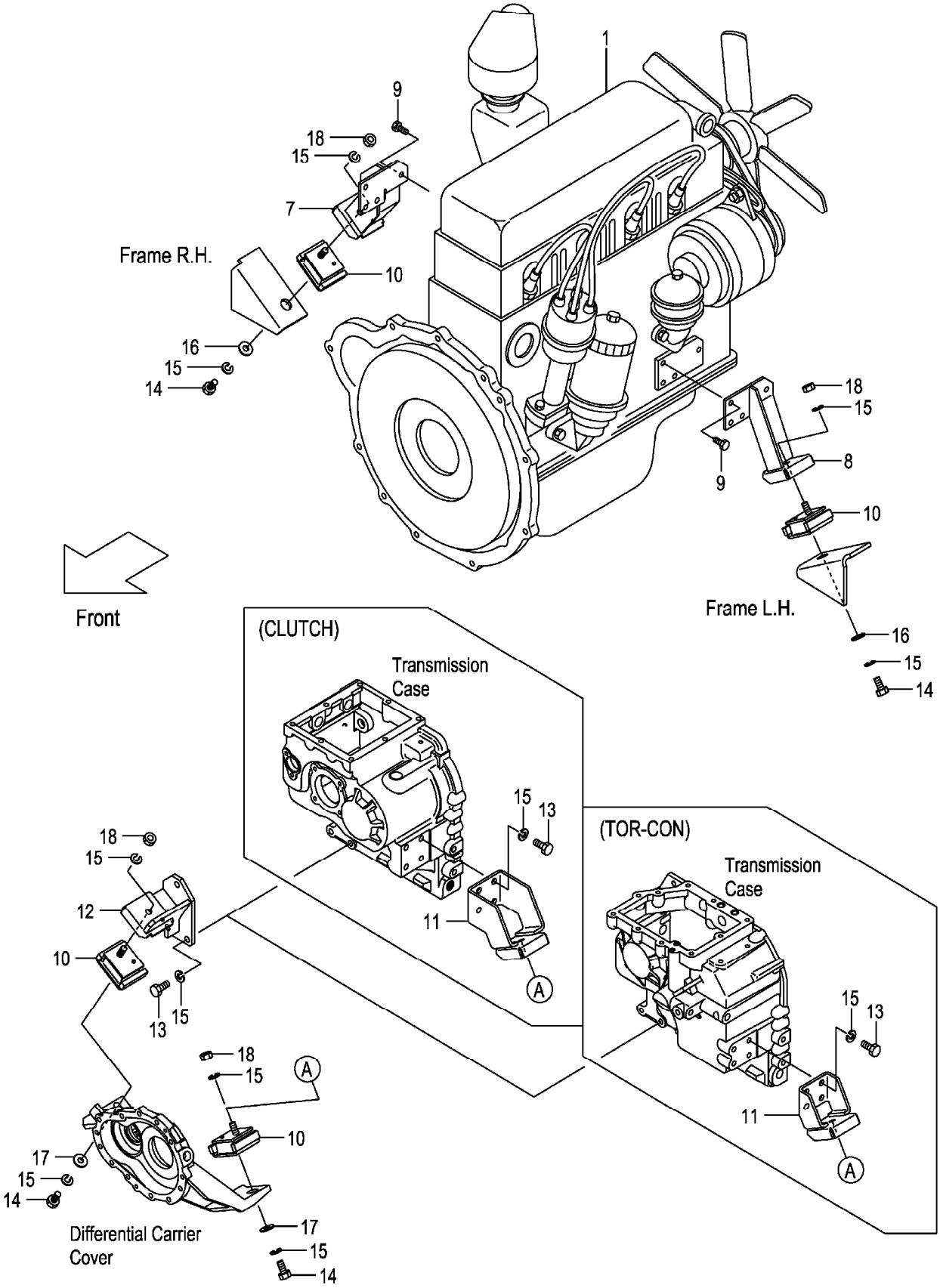

A:FG20C13 FG25C13 D:FG20T3 FG25T3
B:FG20T13 FG25T13 E:FG20W3 FG25W3
C:FG20C3 FG25C3

**FIG.1**
(F7021010)

| Item No | Part No. | Mark | Description | | Req'd | Remarks : Serial No. |
|---|---|---|---|---|---|---|
| 1 | 22B51-00101 | | ENGINE,K21 | ｴﾝｼﾞﾝ | 1 | A,B,C,D |
| - | 22C41-00101 | | ENGINE,K21 | ｴﾝｼﾞﾝ | 1 | E |
| - | 52B57-60201 | | ENGINE,K21 | ｴﾝｼﾞﾝ | 1 | C,D<br>[SCBCR] |
| - | 52C47-60201 | | ENGINE,K21 | ｴﾝｼﾞﾝ | 1 | E<br>[SCBCR] |
| - | 52B54-70101 | | ENGINE,K21 | ｴﾝｼﾞﾝ | 1 | A,B,C,D<br>[HCS] |
| - | 52B57-60251 | | ENGINE,K21 | ｴﾝｼﾞﾝ | 1 | C,D<br>[SCBCR/HCS] |
| 2 | 01400-00008 | + | NUT | ﾅｯﾄ | 2 | |
| - | 01400-00008 | + | NUT | ﾅｯﾄ | 1 | C,D,E<br>[SCBCR] |
| 3 | 02010-00008 | + | WASHER | ﾜｯｼｬ | 2 | |
| - | 02010-00008 | + | WASHER | ﾜｯｼｬ | 1 | C,D,E<br>[SCBCR] |
| 4 | 02000-00008 | + | WASHER | ﾜｯｼｬ | 2 | |
| - | 02000-00008 | + | WASHER | ﾜｯｼｬ | 1 | C,D,E<br>[SCBCR] |
| 5 | 01100-05010 | + | BOLT | ﾎﾞﾙﾄ | 1 | |
| 6 | 02010-00005 | + | WASHER | ﾜｯｼｬ | 1 | |
| 7 | 22B51-00211 | | BRACKET,ENGINE,RH | ﾌﾞﾗｹｯﾄ | 1 | |
| 8 | 22B51-00201 | | BRACKET,ENGINE,LH | ﾌﾞﾗｹｯﾄ | 1 | |
| 9 | 01218-10025 | | BOLT | ﾎﾞﾙﾄ | 8 | |
| 10 | 22N51-00161 | | RUBBER,CUSHION | ﾗﾊﾞｰ | 4 | |
| 11 | 22N41-00201 | | BRACKET,FRONT,LH | ﾌﾞﾗｹｯﾄ | 1 | A,C,E |
| - | 22N51-00201 | | BRACKET,FRONT,LH | ﾌﾞﾗｹｯﾄ | 1 | B,D |
| 12 | 22N51-00211 | | BRACKET,FRONT,RH | ﾌﾞﾗｹｯﾄ | 1 | |
| 13 | 01103-12030 | | BOLT | ﾎﾞﾙﾄ | 7 | |
| 14 | 01103-12025 | | BOLT | ﾎﾞﾙﾄ | 4 | |
| 15 | 02011-00012 | | WASHER | ﾜｯｼｬ | 15 | |
| 16 | 256C6-32011 | | WASHER | ﾜｯｼｬ | 2 | |
| 17 | 256C9-52372 | | WASHER | ﾜｯｼｬ | 2 | |
| 18 | 01400-00012 | | NUT | ﾅｯﾄ | 4 | |

# FIG.2 ENGINE MOUNT (DIESEL)

(F7021020) エンジンマウント

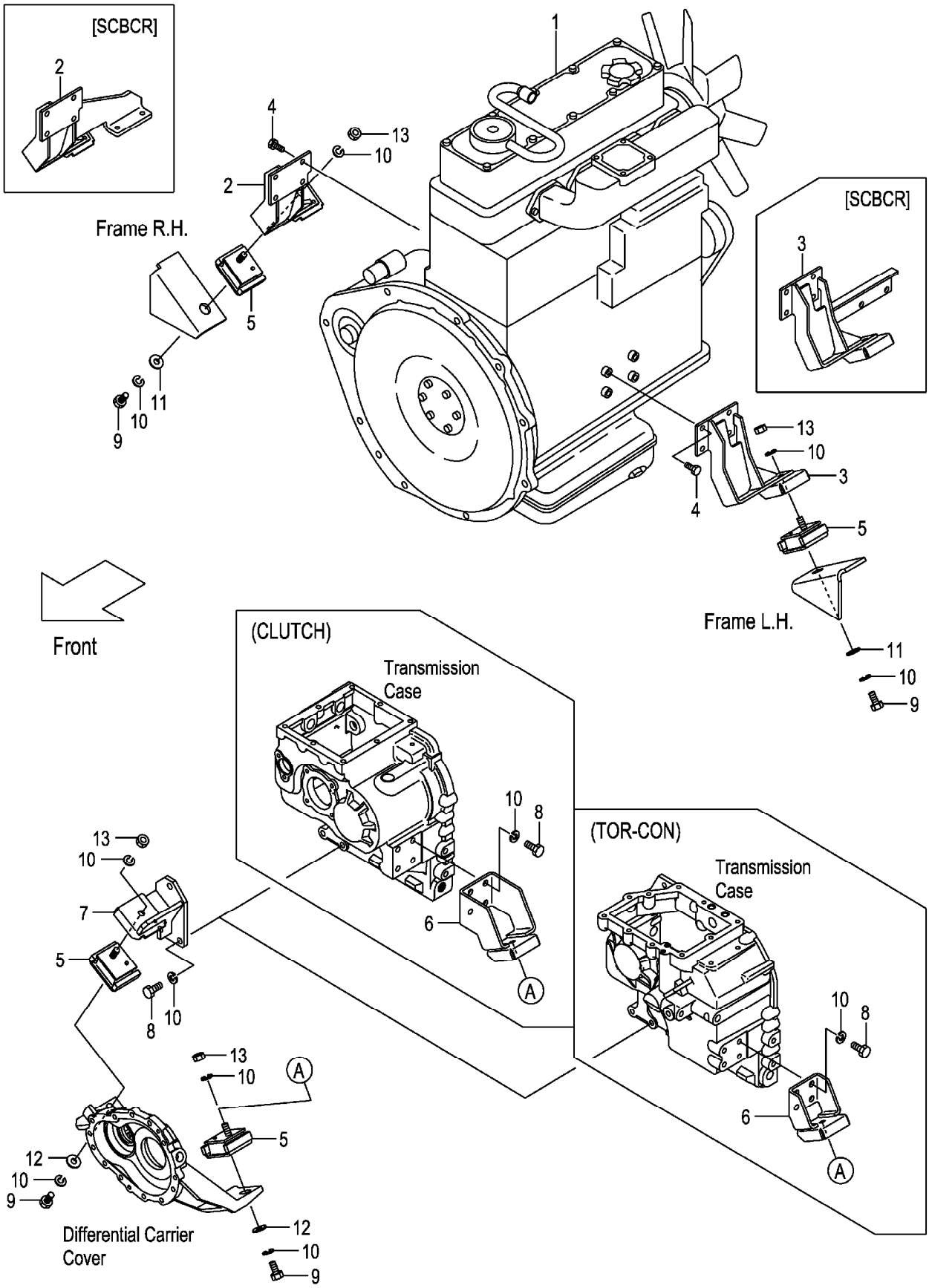

A:FD20C13 FD25C13 D:FD20T3 FD25T3
B:FD20T13 FD25T13 E:FD20W3 FD25W3
C:FD20C3 FD25C3

**FIG.2**
(F7021020)

| Item No | Part No. | Mark | Description | | Req'd | Remarks : Serial No. |
|---|---|---|---|---|---|---|
| 1 | 22N51-00101 | | ENGINE,TD27 | ｴﾝｼﾞﾝ | 1 | A,B,C,D |
| - | 22P41-00101 | | ENGINE,TD27 | ｴﾝｼﾞﾝ | 1 | E |
| 2 | 22N51-00401 | | BRACKET,ENGINE,RH | ﾌﾞﾗｹｯﾄ | 1 | A,B,C,D |
| - | 22P41-00401 | | BRACKET,ENGINE,RH | ﾌﾞﾗｹｯﾄ | 1 | E |
| - | 52N57-60501 | | BRACKET,ENGINE,RH | ﾌﾞﾗｹｯﾄ | 1 | C,D |
| | | | | | | [SCBCR] |
| 3 | 22N51-00411 | | BRACKET,ENGINE,LH | ﾌﾞﾗｹｯﾄ | 1 | |
| - | 52N57-60511 | | BRACKET,ENGINE,LH | ﾌﾞﾗｹｯﾄ | 1 | C,D |
| | | | | | | [SCBCR] |
| 4 | 01218-10035 | | BOLT | ﾎﾞﾙﾄ | 8 | |
| 5 | 22N51-00161 | | RUBBER,CUSHION | ﾗﾊﾞｰ | 4 | |
| 6 | 22N41-00201 | | BRACKET,FRONT,LH | ﾌﾞﾗｹｯﾄ | 1 | A,C,E |
| - | 22N51-00201 | | BRACKET,FRONT,LH | ﾌﾞﾗｹｯﾄ | 1 | B,D |
| 7 | 22N51-00211 | | BRACKET,FRONT,RH | ﾌﾞﾗｹｯﾄ | 1 | |
| 8 | 01103-12030 | | BOLT | ﾎﾞﾙﾄ | 7 | |
| 9 | 01103-12025 | | BOLT | ﾎﾞﾙﾄ | 4 | |
| 10 | 02011-00012 | | WASHER | ﾜｯｼｬ | 15 | |
| 11 | 256C6-32011 | | WASHER | ﾜｯｼｬ | 2 | |
| 12 | 256C9-52372 | | WASHER | ﾜｯｼｬ | 2 | |
| 13 | 01400-00012 | | NUT | ﾅｯﾄ | 4 | |

# FIG.3 AIR CLEANER (GASOLINE)

(F7021030) エアークリーナ

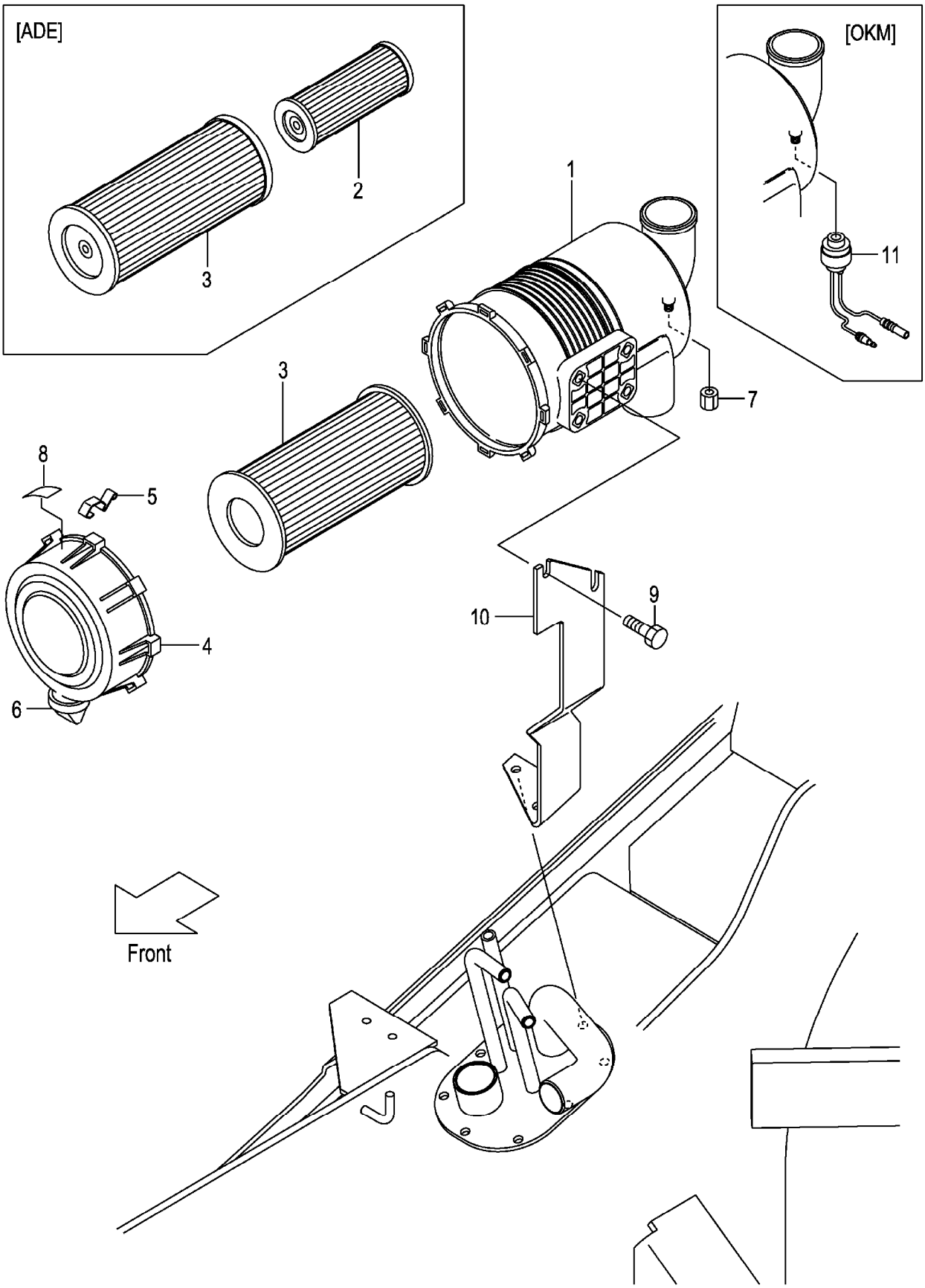

**FIG.3**

A:FG20C13 FG20T13 FG25C13 FG25T13
B:FG20C3 FG20T3 FG25C3 FG25T3 FG20W3 FG25W3

(F7021030)

| Item No | Part No. | Mark | Description | | Req'd | Remarks : Serial No. |
|---|---|---|---|---|---|---|
| A1 | 216G1-02451 | | CLEANER-ASSY,AIR | ｴｱｰｸﾘｰﾅｱｯｾﾝ | 1 | INC.1,3-8 |
| - | 516G0-60101 | | CLEANER-ASSY,AIR | ｴｱｰｸﾘｰﾅｱｯｾﾝ | 1 | [ADE] INC.1-8 |
| 1 | 216G1-02481 | | BODY | ﾎﾞﾃﾞｨ | 1 | |
| 2 | 213T1-02021 | | ELEMENT,INNER | ｴﾚﾒﾝﾄ | 1 | [ADE] |
| 3 | 256C1-08011 | | ELEMENT,OUTER | ｴﾚﾒﾝﾄ | 1 | |
| - | 213T1-02011 | | ELEMENT,OUTER | ｴﾚﾒﾝﾄ | 1 | [ADE] |
| 4 | 216G1-02461 | | COVER | ｶﾊﾞｰ | 1 | |
| 5 | 216G1-02471 | | LATCH | ﾗｯﾁ | 3 | |
| 6 | 216G1-02491 | | VALVE,VACUATOR | ﾊﾞﾙﾌﾞ | 1 | |
| 7 | 53651-12551 | | CAP,NIPPLE | ｷｬｯﾌﾟ | 1 | |
| 8 | 216G1-02501 | | LABEL | ﾗﾍﾞﾙ | 1 | |
| - | 516G0-62011 | | LABEL | ﾗﾍﾞﾙ | 1 | [ADE] |
| 9 | 01183-08016 | | BOLT | ﾎﾞﾙﾄ | 2 | |
| 10 | 22B51-02001 | | BRACKET,AIR-CLEANER | ﾌﾞﾗｹｯﾄ | 1 | |
| 11 | 54612-42021 | | SENSOR,635MM | ｾﾝｻ | 1 | [OKM] |

# FIG.4 AIR CLEANER (DIESEL)

(F7021040) エアークリーナ

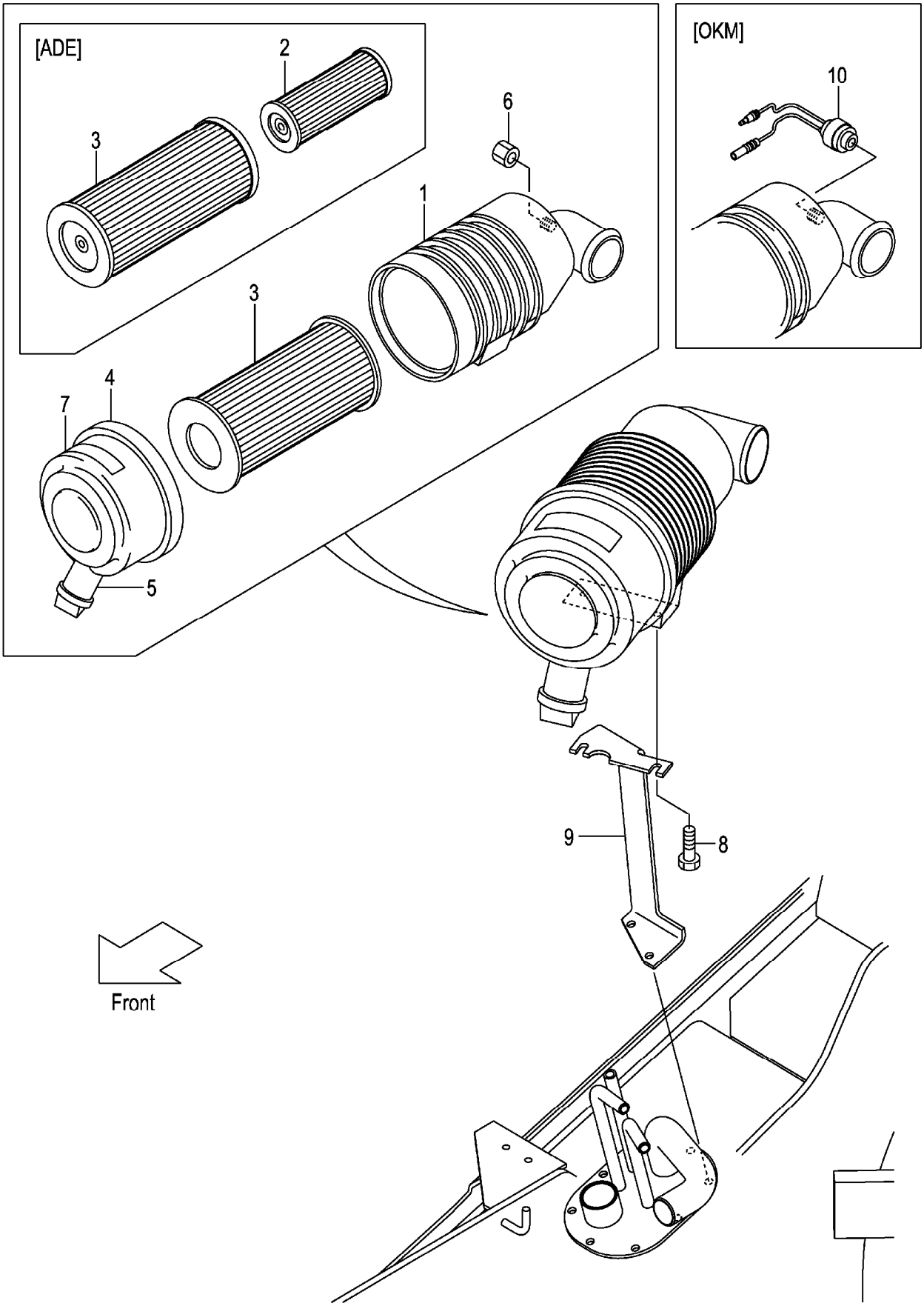

**FIG.4**

A:FD20C13 FD20T13 FD25C13 FD25T13
B:FD20C3 FD20T3 FD25C3 FD25T3 FD20W3 FD25W3

(F7021040)

| Item No | Part No. | Mark | Description | | Req'd | Remarks : Serial No. |
|---|---|---|---|---|---|---|
| A1 | 234A1-00101 | | CLEANER-ASSY,AIR | ｴｱｰｸﾘｰﾅｱｯｾﾝ | 1 | INC.1,3-7 |
| - | 534A0-60011 | | CLEANER-ASSY,AIR | ｴｱｰｸﾘｰﾅｱｯｾﾝ | 1 | [ADE] INC.1-7 |
| 1 | 234A1-00111 | | BODY | ﾎﾞﾃﾞｨ | 1 | |
| 2 | 534A0-62011 | | ELEMENT,INNER | ｴﾚﾒﾝﾄ | 1 | [ADE] |
| 3 | 256G1-08011 | | ELEMENT,OUTER | ｴﾚﾒﾝﾄ | 1 | |
| - | 534A0-62001 | | ELEMENT,OUTER | ｴﾚﾒﾝﾄ | 1 | [ADE] |
| 4 | 256G1-08021 | | COVER | ｶﾊﾞｰ | 1 | |
| 5 | 256A1-08031 | | VALVE,VACUATOR | ﾊﾞﾙﾌﾞ | 1 | |
| 6 | 53651-12551 | | CAP,NIPPLE | ｷｬｯﾌﾟ | 1 | |
| 7 | 234A1-00121 | | LABEL | ﾗﾍﾞﾙ | 1 | |
| - | 516G0-62001 | | LABEL | ﾗﾍﾞﾙ | 1 | [ADE] |
| 8 | 01183-08016 | | BOLT | ﾎﾞﾙﾄ | 2 | A:1-110 |
| | | | | | | B:1-180 |
| - | 01185-08016 | | BOLT | ﾎﾞﾙﾄ | 2 | A:111- |
| | | | | | | B:181- |
| 9 | 22N51-02001 | | BRACKET,AIR-CLEANER | ﾌﾞﾗｹｯﾄ | 1 | |
| 10 | 522A1-10201 | | SENSOR,762MM | ｾﾝｻ | 1 | [OKM] |

# FIG.5 AIR DUCT (GASOLINE)

(F7021050) エアーダクト

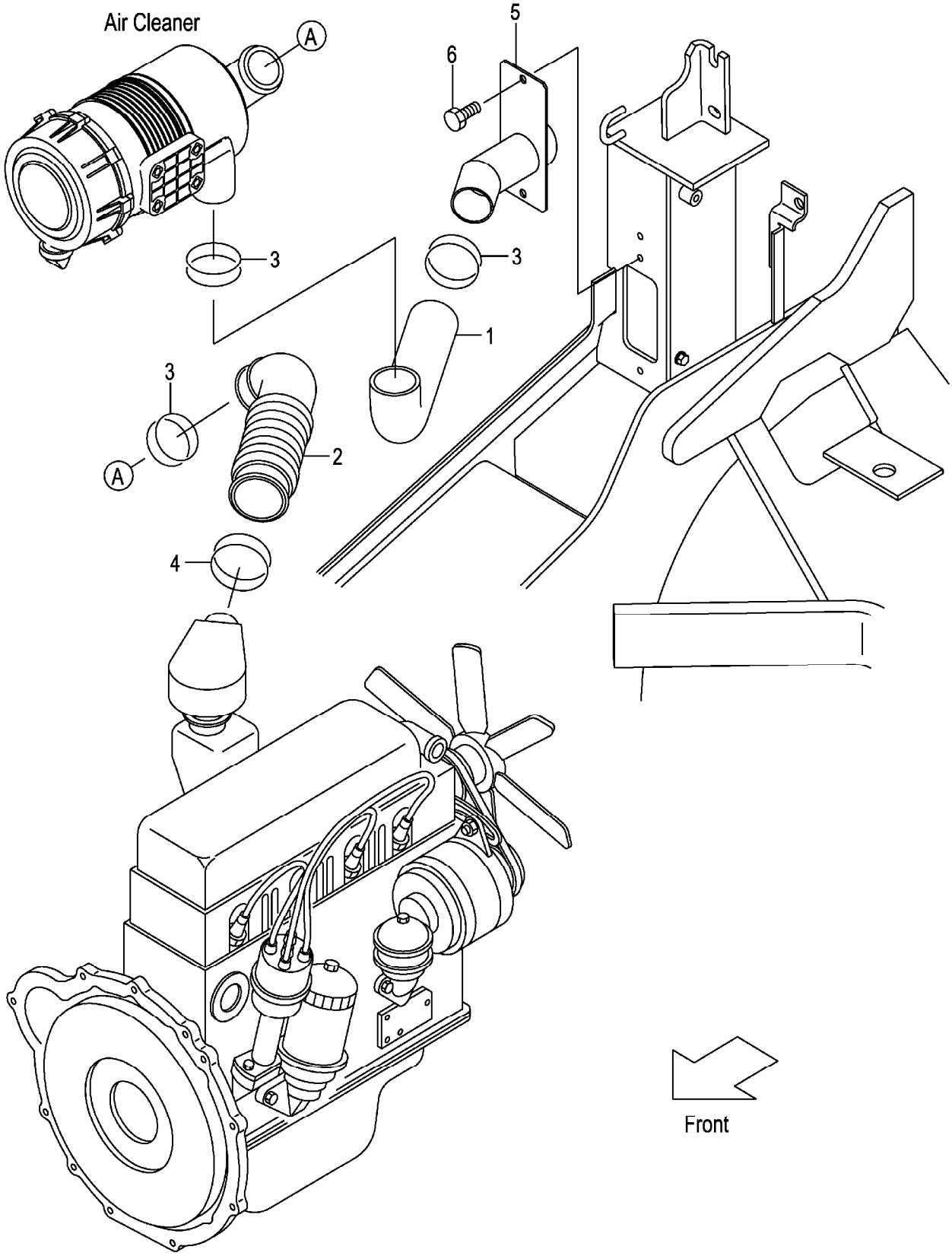

**FIG.5**

A:FG20C13 FG20T13 FG25C13 FG25T13
B:FG20C3 FG20T3 FG25C3 FG25T3 FG20W3 FG25W3

(F7021050)

| Item No | Part No. | Mark | Description | | Req'd | Remarks : Serial No. |
|---|---|---|---|---|---|---|
| 1 | 22B51-02201 | | HOSE,AIR-DUCT | ﾎｰｽ | 1 | |
| 2 | 20A71-02101 | | HOSE,AIR-INTAKE | ﾎｰｽ | 1 | |
| 3 | 04911-00060 | | CLIP | ｸﾘｯﾌﾟ | 3 | |
| 4 | 04911-00075 | | CLIP | ｸﾘｯﾌﾟ | 1 | |
| 5 | 22B51-02601 | | PIPE,DUCT | ﾊﾟｲﾌﾟ | 1 | |
| 6 | 01185-08016 | | BOLT | ﾎﾞﾙﾄ | 2 | |

# FIG.6 AIR DUCT (DIESEL)

(F7021060) エアーダクト

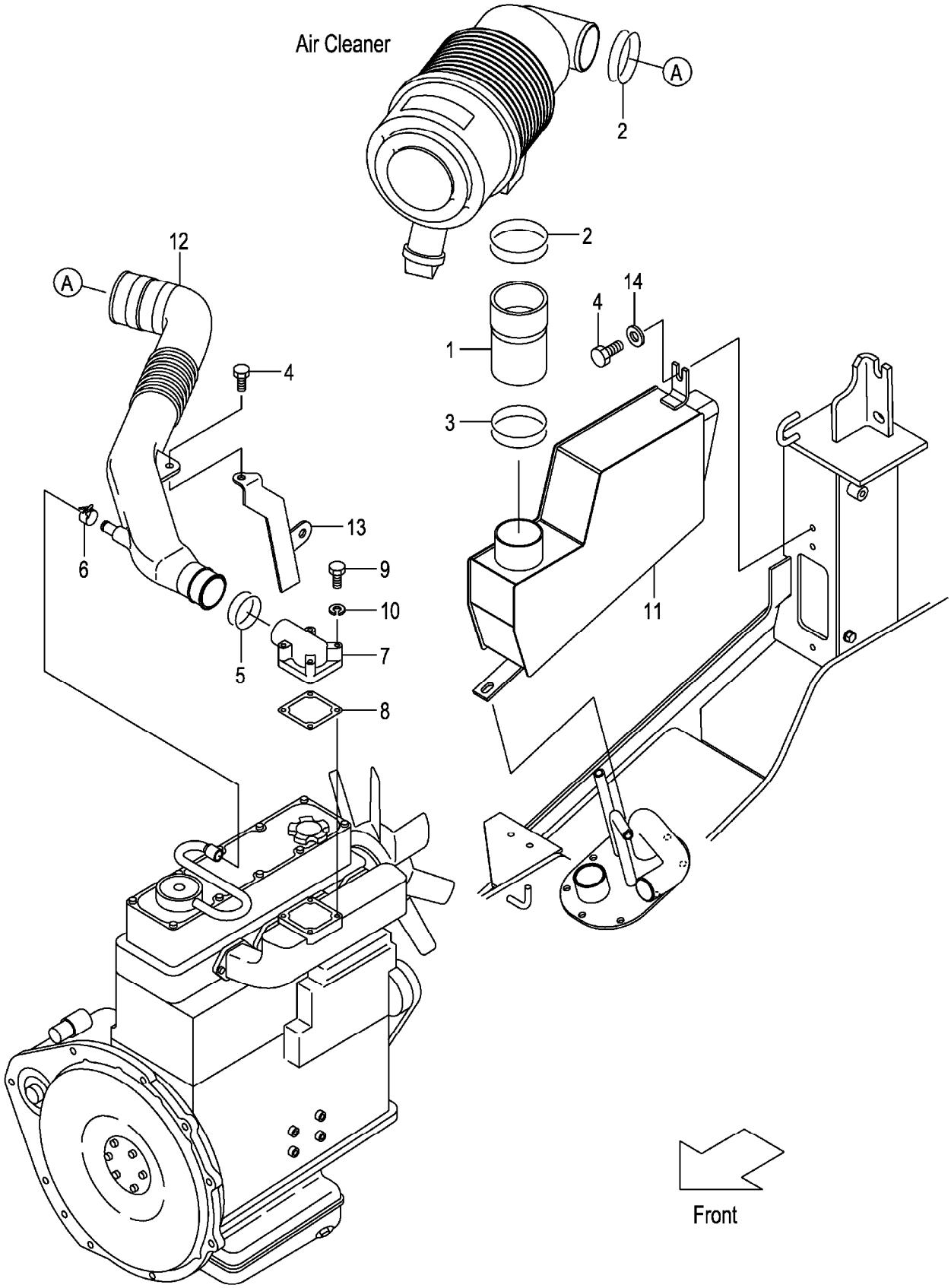

**FIG.6**

A:FD20C13 FD20T13 FD25C13 FD25T13
B:FD20C3 FD20T3 FD25C3 FD25T3 FD20W3 FD25W3

(F7021060)

| Item No | Part No. | Mark | Description | | Req'd | Remarks : Serial No. |
|---|---|---|---|---|---|---|
| 1 | 22N51-02201 | | DUCT,AIR | ﾀﾞｸﾄ | 1 | |
| 2 | 04911-00073 | | CLIP | ｸﾘｯﾌﾟ | 2 | |
| 3 | 04911-00070 | | CLIP | ｸﾘｯﾌﾟ | 1 | |
| 4 | 01185-08016 | | BOLT | ﾎﾞﾙﾄ | 2 | |
| 5 | 04911-00060 | | CLIP | ｸﾘｯﾌﾟ | 1 | |
| 6 | 23652-22121 | | CLIP | ｸﾘｯﾌﾟ | 1 | |
| 7 | 242F1-02111 | | INTAKE,AIR | ｲﾝﾃｰｸ | 1 | |
| 8 | 242F1-02121 | | GASKET | ｶﾞｽｹｯﾄ | 1 | |
| 9 | 01100-08065 | | BOLT | ﾎﾞﾙﾄ | 4 | |
| 10 | 02010-00008 | | WASHER | ﾜｯｼｬ | 4 | |
| 11 | 22N51-00601 | | RESONATOR | ﾚｿﾞﾈｰﾀ | 1 | |
| 12 | 22N51-00301 | | HOSE,AIR-DUCT | ﾎｰｽ | 1 | |
| 13 | 22N51-02251 | | BRACKET,INTAKE-DUCT | ﾌﾞﾗｹｯﾄ | 1 | |
| 14 | 02000-00008 | | WASHER | ﾜｯｼｬ | 1 | |

# FIG.7 AIR DUCT (GASOLINE):[CAKB]

(F7021070) ｴｱｰﾀﾞｸﾄ

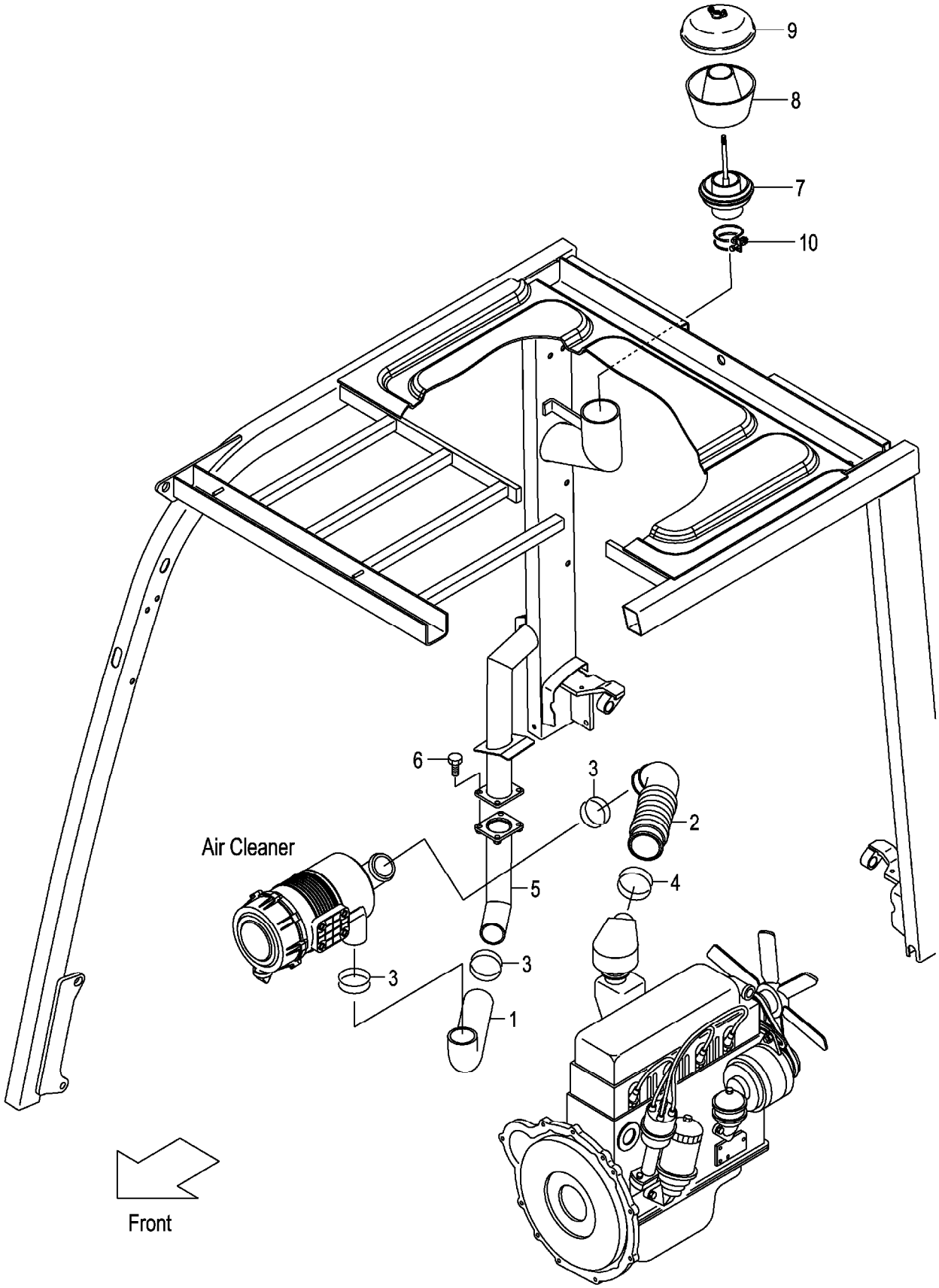

A:FG20C13 FG20T13 FG25C13 FG25T13
B:FG20C3 FG20T3 FG25C3 FG25T3 FG20W3 FG25W3

| Item No | Part No. | Mark | Description | | Req'd | Remarks : Serial No. |
|---|---|---|---|---|---|---|
| 1 | 52B50-92251 | | HOSE,AIR-DUCT | ﾎｰｽ | 1 | [CAKB] |
| 2 | 20A71-02101 | | HOSE,AIR-INTAKE | ﾎｰｽ | 1 | [CAKB] |
| 3 | 04911-00060 | | CLIP | ｸﾘｯﾌﾟ | 3 | [CAKB] |
| 4 | 04911-00075 | | CLIP | ｸﾘｯﾌﾟ | 1 | [CAKB] |
| 5 | 52B50-92201 | | PIPE,INTAKE | ﾊﾟｲﾌﾟ | 1 | [CAKB] |
| 6 | 01183-08020 | | BOLT | ﾎﾞﾙﾄ | 4 | [CAKB] |
| A1 | 522B0-92021 | | CLEANER-ASSY,PRE | ﾌﾟﾚｸﾘｰﾅｱｯｾﾝ | 1 | [CAKB] INC.7-9 |
| 7 | 522B0-92031 | | SLEEVE | ｽﾘｰﾌﾞ | 1 | [CAKB] |
| 8 | 522B0-92041 | | BODY | ﾎﾞﾃﾞｨ | 1 | [CAKB] |
| 9 | 522B0-92051 | | COVER | ｶﾊﾞｰ | 1 | [CAKB] |
| 10 | 04911-00090 | | CLIP | ｸﾘｯﾌﾟ | 1 | [CAKB] |

# FIG.8 AIR DUCT (DIESEL):[CAKB]

(F7021080) エアーダクト

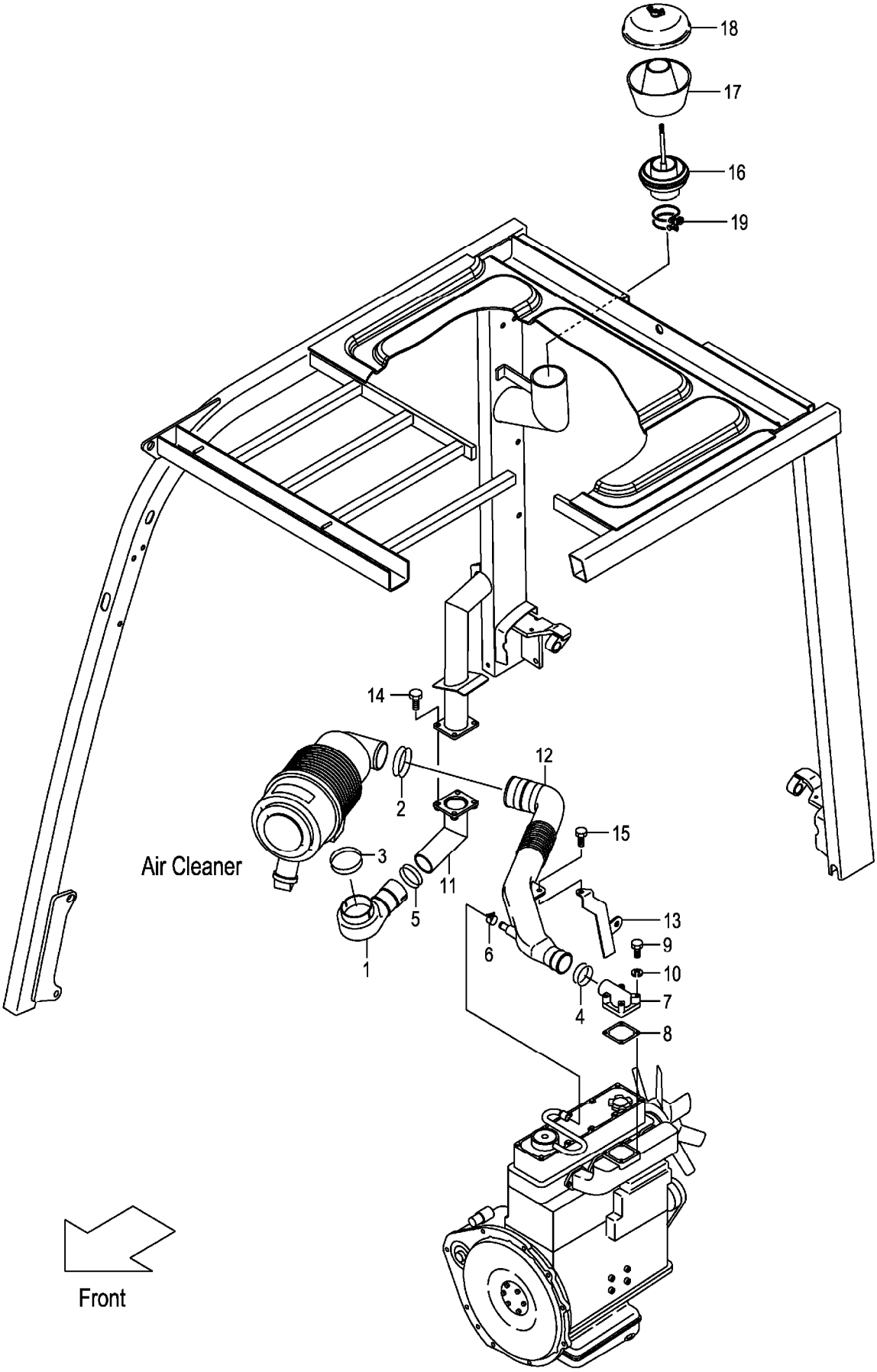

**FIG.8**

A:FD20C13 FD20T13 FD25C13 FD25T13
B:FD20C3 FD20T3 FD25C3 FD25T3 FD20W3 FD25W3

(F7021080)

| Item No | Part No. | Mark | Description | | Req'd | Remarks : Serial No. |
|---|---|---|---|---|---|---|
| 1 | 234A1-02001 | | INTAKE,AIR | ｲﾝﾃｰｸ | 1 | [CAKB] |
| 2 | 04911-00073 | | CLIP | ｸﾘｯﾌﾟ | 1 | [CAKB] |
| 3 | 04911-00070 | | CLIP | ｸﾘｯﾌﾟ | 1 | [CAKB] |
| 4 | 04911-00060 | | CLIP | ｸﾘｯﾌﾟ | 1 | [CAKB] |
| 5 | 04911-00055 | | CLIP | ｸﾘｯﾌﾟ | 1 | [CAKB] |
| 6 | 23652-22121 | | CLIP | ｸﾘｯﾌﾟ | 1 | [CAKB] |
| 7 | 242F1-02111 | | INTAKE,AIR | ｲﾝﾃｰｸ | 1 | [CAKB] |
| 8 | 242F1-02121 | | GASKET | ｶﾞｽｹｯﾄ | 1 | [CAKB] |
| 9 | 01100-08065 | | BOLT | ﾎﾞﾙﾄ | 4 | [CAKB] |
| 10 | 02010-00008 | | WASHER | ﾜｯｼｬ | 4 | [CAKB] |
| 11 | 52N50-92202 | | PIPE,INTAKE | ﾊﾟｲﾌﾟ | 1 | [CAKB] |
| 12 | 22N51-00301 | | HOSE,AIR-DUCT | ﾎｰｽ | 1 | [CAKB] |
| 13 | 22N51-02251 | | BRACKET,INTAKE-DUCT | ﾌﾞﾗｹｯﾄ | 1 | [CAKB] |
| 14 | 01183-08020 | | BOLT | ﾎﾞﾙﾄ | 4 | [CAKB] |
| 15 | 01185-08016 | | BOLT | ﾎﾞﾙﾄ | 1 | [CAKB] |
| A1 | 522B0-92021 | | CLEANER-ASSY,PRE | ﾌﾟﾚｸﾘｰﾅｱｯｾﾝ | 1 | [CAKB] INC.16-18 |
| 16 | 522B0-92031 | | SLEEVE | ｽﾘｰﾌﾞ | 1 | [CAKB] |
| 17 | 522B0-92041 | | BODY | ﾎﾞﾃﾞｨ | 1 | [CAKB] |
| 18 | 522B0-92051 | | COVER | ｶﾊﾞｰ | 1 | [CAKB] |
| 19 | 04911-00090 | | CLIP | ｸﾘｯﾌﾟ | 1 | [CAKB] |

# FIG.9 COOLING UNIT (CLUTCH)(OIL CLUTCH)

(F7022110) クーリング゛ユニット

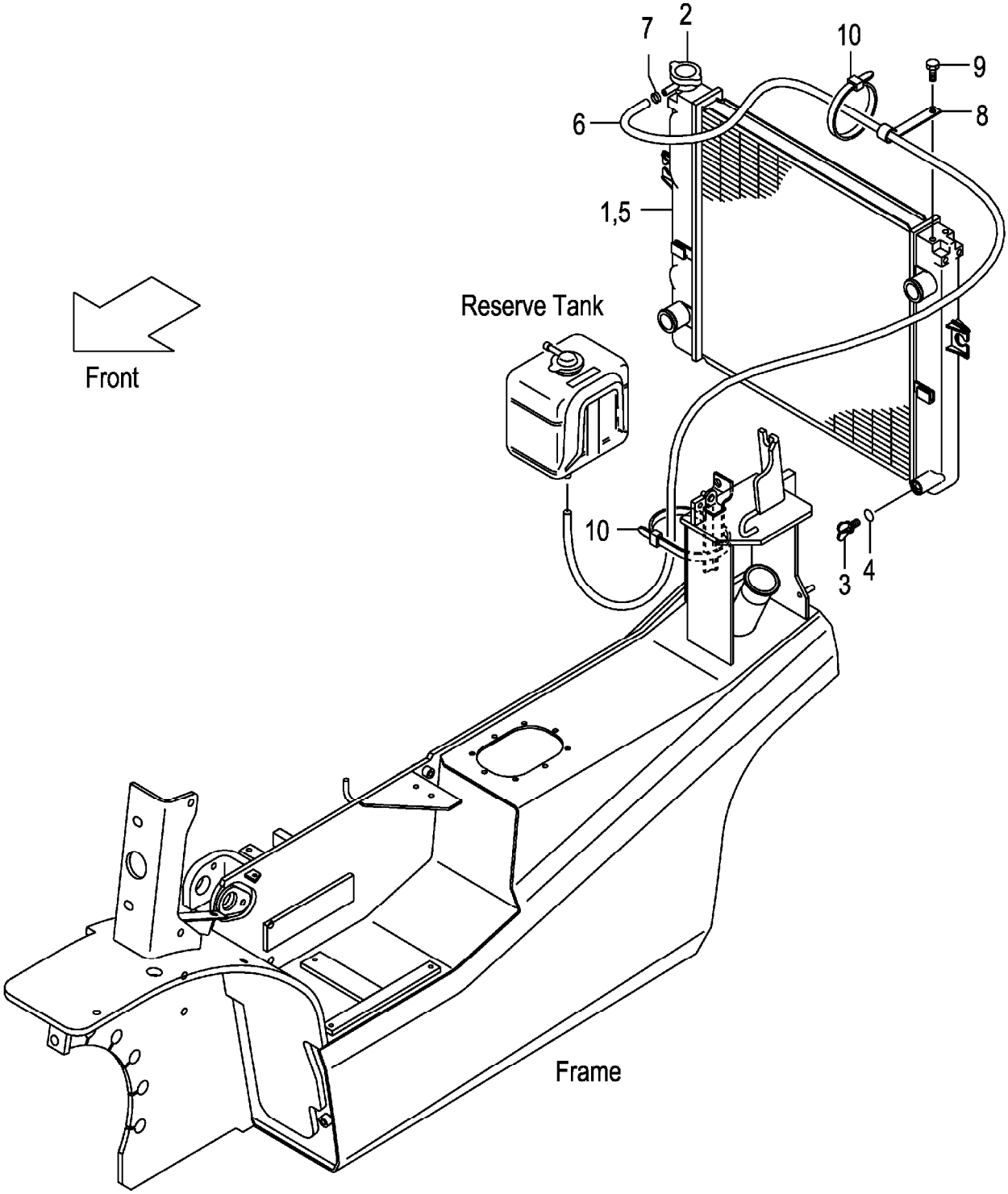

A:FG20C13 FG25C13 D:FD20C13 FD25C13
B:FG20C3 FG25C3 E:FD20C3 FD25C3
C:FG20W3 FG25W3 F:FD20W3 FD25W3

**FIG.9**
(F7022110)

| Item No | Part No. | Mark | Description | | Req'd | Remarks : Serial No. |
|---|---|---|---|---|---|---|
| A1 | 237A2-10102 | | RADIATOR-ASSY | ﾗｼﾞｴｰﾀｱｯｾﾝ | 1 | A,B,D,E |
| | | | | | | INC.1-7 |
| - | 237H2-10102 | | RADIATOR-ASSY | ﾗｼﾞｴｰﾀｱｯｾﾝ | 1 | C,F |
| | | | | | | INC.1-7 |
| - | 537A6-60302 | | RADIATOR-ASSY | ﾗｼﾞｴｰﾀｱｯｾﾝ | 1 | [RADPF][HCS] INC.1-7 |
| - | 537A6-60302 | | RADIATOR-ASSY | ﾗｼﾞｴｰﾀｱｯｾﾝ | 1 | B,E |
| | | | | | | [EXK] INC.1-7 |
| 1 | NO PART NO. | # | RADIATOR | ﾗｼﾞｴｰﾀ | 1 | A,B,D,E |
| - | NO PART NO. | # | RADIATOR | ﾗｼﾞｴｰﾀ | 1 | C,F |
| - | NO PART NO. | # | RADIATOR | ﾗｼﾞｴｰﾀ | 1 | [RADPF][HCS] |
| - | NO PART NO. | # | RADIATOR | ﾗｼﾞｴｰﾀ | 1 | B,E |
| | | | | | | [EXK] |
| 2 | 222A2-10211 | | CAP | ｷｬｯﾌﾟ | 1 | |
| 3 | 234A2-12201 | | COCK | ｺｯｸ | 1 | |
| 4 | 234A2-12211 | | O-RING | Oﾘﾝｸﾞ | 1 | |
| 5 | NO PART NO. | # | NUT | ﾅｯﾄ | 3 | A,B,D,E |
| - | NO PART NO. | # | NUT | ﾅｯﾄ | 4 | C,F |
| - | NO PART NO. | # | NUT | ﾅｯﾄ | 4 | [RADPF][HCS] |
| - | NO PART NO. | # | NUT | ﾅｯﾄ | 4 | B,E |
| | | | | | | [EXK] |
| 6 | NO PART NO. | | HOSE | ﾎｰｽ | 1 | |
| 7 | 23772-12071 | | CLIP | ｸﾘｯﾌﾟ | 1 | |
| 8 | 214A2-42331 | | CLIP | ｸﾘｯﾌﾟ | 1 | |
| 9 | 01185-08016 | | BOLT | ﾎﾞﾙﾄ | 1 | |
| 10 | 29590-64501 | | BAND | ﾊﾞﾝﾄﾞ | 2 | A,D:111- |
| | | | | | | B,C:122- |
| | | | | | | E,F:181- |

# FIG.10 COOLING UNIT (TOR-CON)

(F7022120) クーリング゛ユニット

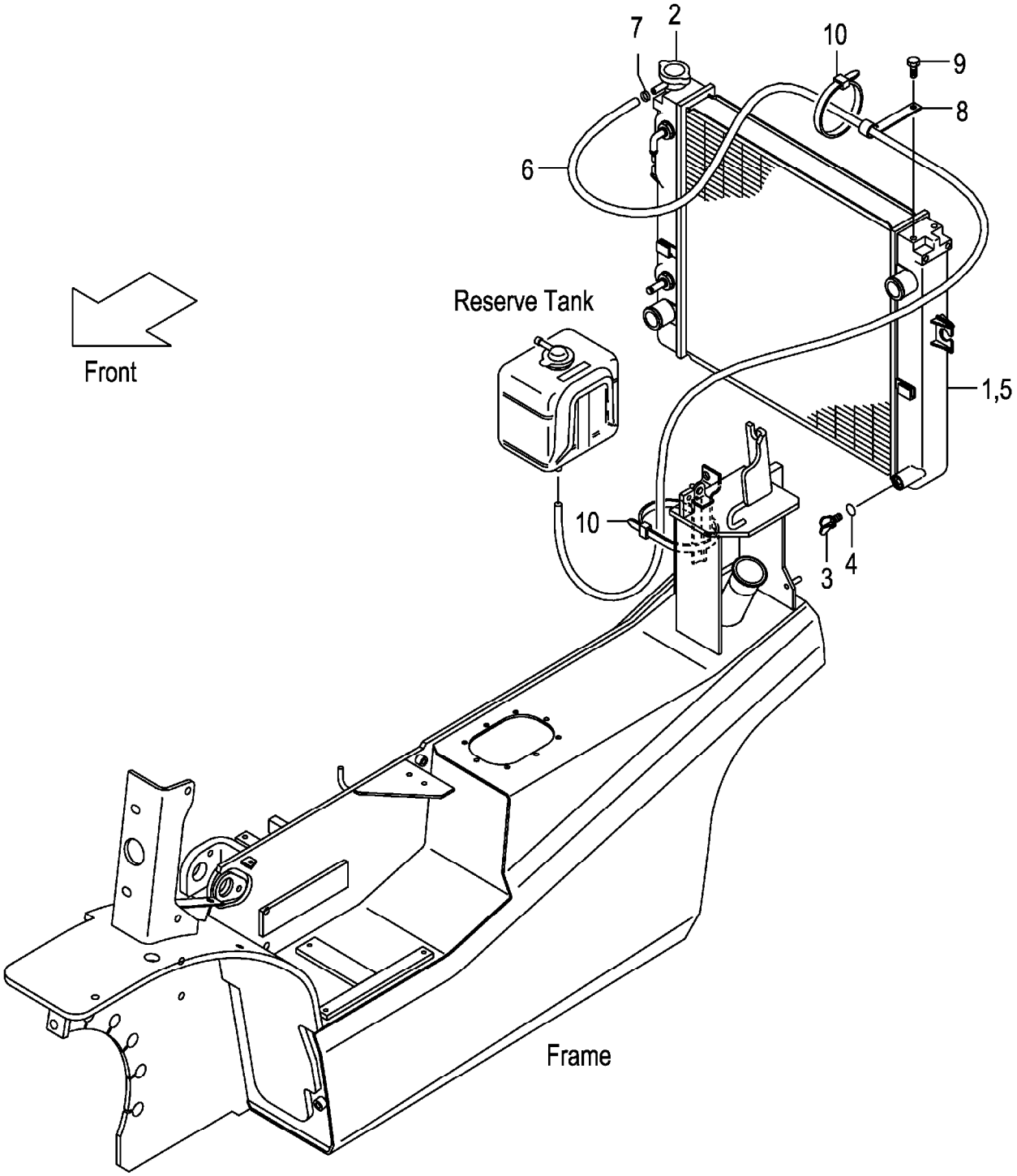

**FIG.10**

A:FG20T13 FG25T13 C:FD20T13 FD25T13
B:FG20T3 FG25T3 D:FD20T3 FD25T3

(F7022120)

| Item No | Part No. | Mark | Description | | Req'd | Remarks : Serial No. |
|---|---|---|---|---|---|---|
| A1 | 236L2-10102 | | RADIATOR-ASSY | ﾗｼﾞｴｰﾀｱｯｾﾝ | 1 | INC.1-7 |
| - | 536B6-60302 | | RADIATOR-ASSY | ﾗｼﾞｴｰﾀｱｯｾﾝ | 1 | [RADPF][HCS] INC.1-7 |
| - | 536B6-60302 | | RADIATOR-ASSY | ﾗｼﾞｴｰﾀｱｯｾﾝ | 1 | B,D |
| | | | | | | [EXK] INC.1-7 |
| 1 | NO PART NO. | # | RADIATOR | ﾗｼﾞｴｰﾀ | 1 | |
| - | NO PART NO. | # | RADIATOR | ﾗｼﾞｴｰﾀ | 1 | [RADPF][HCS] |
| - | NO PART NO. | # | RADIATOR | ﾗｼﾞｴｰﾀ | 1 | B,D |
| | | | | | | [EXK] |
| 2 | 222A2-10211 | | CAP | ｷｬｯﾌﾟ | 1 | |
| 3 | 234A2-12201 | | COCK | ｺｯｸ | 1 | |
| 4 | 234A2-12211 | | O-RING | Oﾘﾝｸﾞ | 1 | |
| 5 | NO PART NO. | # | NUT | ﾅｯﾄ | 4 | |
| 6 | NO PART NO. | | HOSE | ﾎｰｽ | 1 | |
| 7 | 23772-12071 | | CLIP | ｸﾘｯﾌﾟ | 1 | |
| 8 | 214A2-42331 | | CLIP | ｸﾘｯﾌﾟ | 1 | |
| 9 | 01185-08016 | | BOLT | ﾎﾞﾙﾄ | 1 | |
| 10 | 29590-64501 | | BAND | ﾊﾞﾝﾄﾞ | 2 | A,C:111- |
| | | | | | | B:122- |
| | | | | | | D:181- |

# FIG.11 FAN SHROUD (GASOLINE)

(F7022130) ﾌｧﾝｼｭﾗｳﾄﾞ

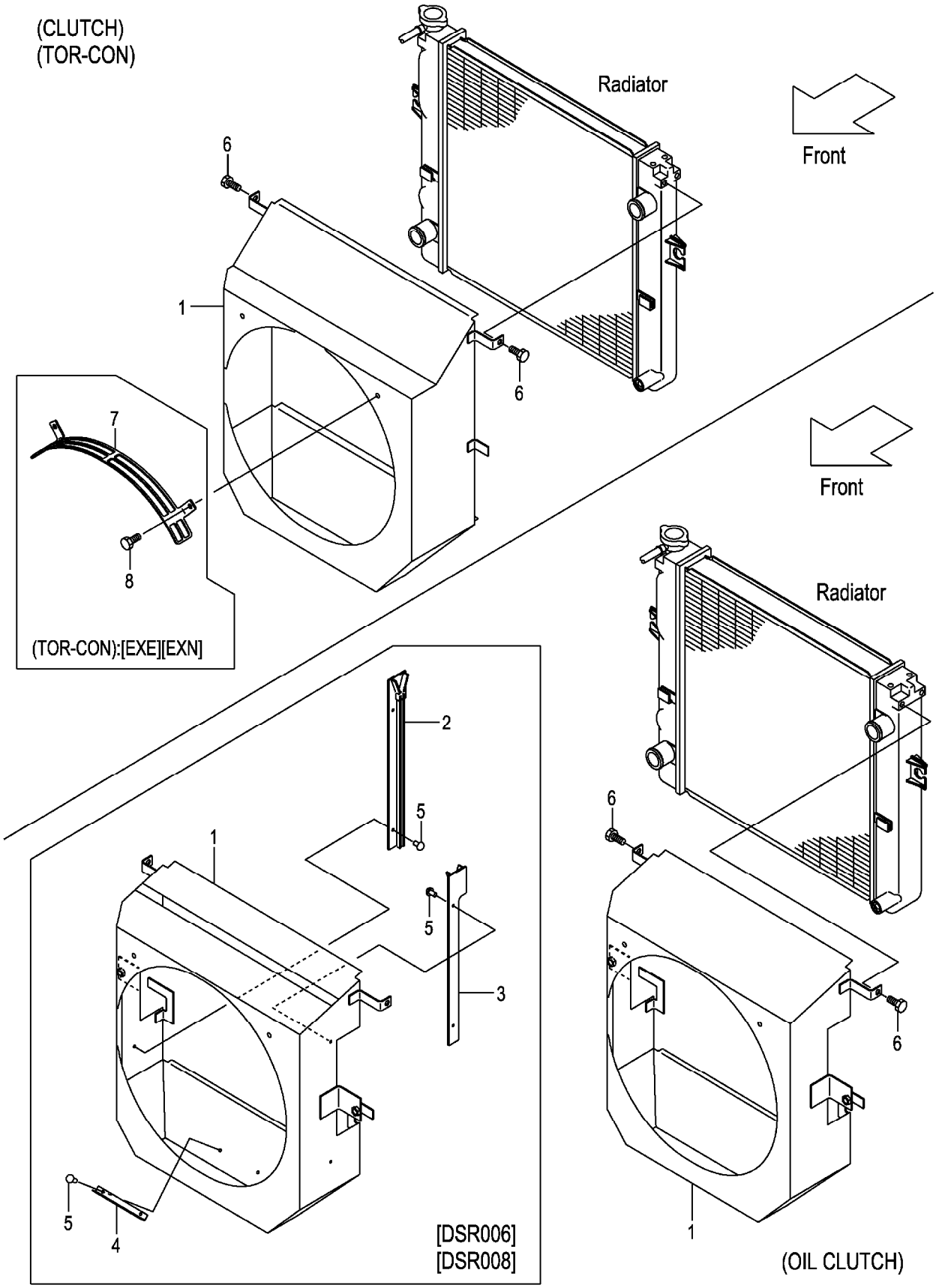

A:FG20C13 FG25C13 D:FG20T3 FG25T3
B:FG20T13 FG25T13 E:FG20W3 FG25W3
C:FG20C3 FG25C3

**FIG.11**
(F7022130)

| Item No | Part No. | Mark | Description | | Req'd | Remarks : Serial No. |
|---|---|---|---|---|---|---|
| 1 | 22B52-12201 | | SHROUD,FAN | ｼｭﾗｳﾄﾞ | 1 | A,B,C,D |
| - | 22C42-12201 | | SHROUD,FAN | ｼｭﾗｳﾄﾞ | 1 | E |
| - | 52B56-52001 | | SHROUD,FAN | ｼｭﾗｳﾄﾞ | 1 | A,B,C,D<br>[DSR006][DSR008] |
| - | 52C46-52101 | | SHROUD,FAN | ｼｭﾗｳﾄﾞ | 1 | E<br>[DSR006][DSR008] |
| - | 52B57-62201 | | SHROUD,FAN | ｼｭﾗｳﾄﾞ | 1 | C,D<br>[SCBCR] |
| 2 | 539H6-52251 | | GUIDE,RH | ｶﾞｲﾄﾞ | 1 | E<br>[DSR006][DSR008] |
| 3 | 539H6-52351 | | GUIDE,LH | ｶﾞｲﾄﾞ | 1 | E<br>[DSR006][DSR008] |
| 4 | 532N6-52011 | | GUIDE,LOWER | ｶﾞｲﾄﾞ | 1 | E<br>[DSR006][DSR008] |
| 5 | 22256-42001 | | RIVET | ﾘﾍﾞｯﾄ | 6 | E<br>[DSR006][DSR008] |
| 6 | 01185-08016 | | BOLT | ﾎﾞﾙﾄ | 2 | |
| 7 | 52N53-83201 | | GUARD,FAN | ｶﾞｰﾄﾞ | 1 | D<br>[EXE][EXN] |
| 8 | 01185-08020 | | BOLT | ﾎﾞﾙﾄ | 2 | D<br>[EXE][EXN] |

# FIG.12 FAN SHROUD (DIESEL)

(F7022140) ﾌｧﾝｼｭﾗｳﾄﾞ

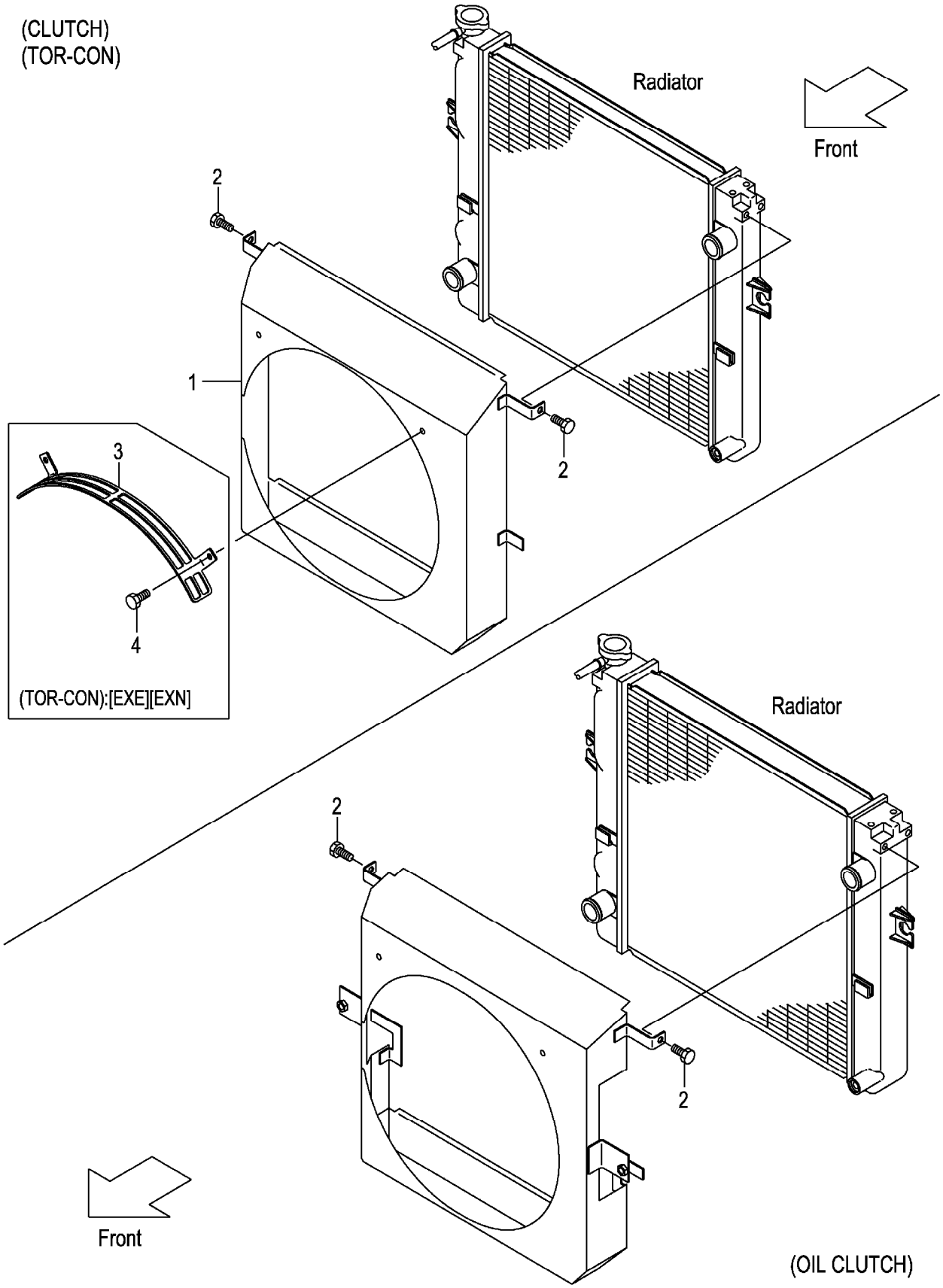

A:FD20C13 FD25C13 D:FD20T3 FD25T3
B:FD20T13 FD25T13 E:FD20W3 FD25W3
C:FD20C3 FD25C3

**FIG.12**
(F7022140)

| Item No | Part No. | Mark | Description | | Req'd | Remarks : Serial No. |
|---|---|---|---|---|---|---|
| 1 | 22N52-12201 | | SHROUD,FAN | ｼｭﾗｳﾄﾞ | 1 | A,B,C,D |
| - | 22P42-12201 | | SHROUD,FAN | ｼｭﾗｳﾄﾞ | 1 | E |
| - | 52N56-52001 | | SHROUD,FAN | ｼｭﾗｳﾄﾞ | 1 | A,B,C,D<br>[DSR006][DSR008] |
| - | 52N57-62201 | | SHROUD,FAN | ｼｭﾗｳﾄﾞ | 1 | C,D<br>[SCBCR] |
| 2 | 01185-08016 | | BOLT | ﾎﾞﾙﾄ | 2 | |
| 3 | 52N53-83201 | | GUARD,FAN | ｶﾞｰﾄﾞ | 1 | D<br>[EXE][EXN] |
| 4 | 01185-08020 | | BOLT | ﾎﾞﾙﾄ | 2 | D<br>[EXE][EXN] |

# FIG.13 RADIATOR PARTS & RESERVE TANK

(F7022150) ﾗｼﾞｴｰﾀﾊﾟｰﾂ&ﾘｻﾞｰﾌﾞﾀﾝｸ

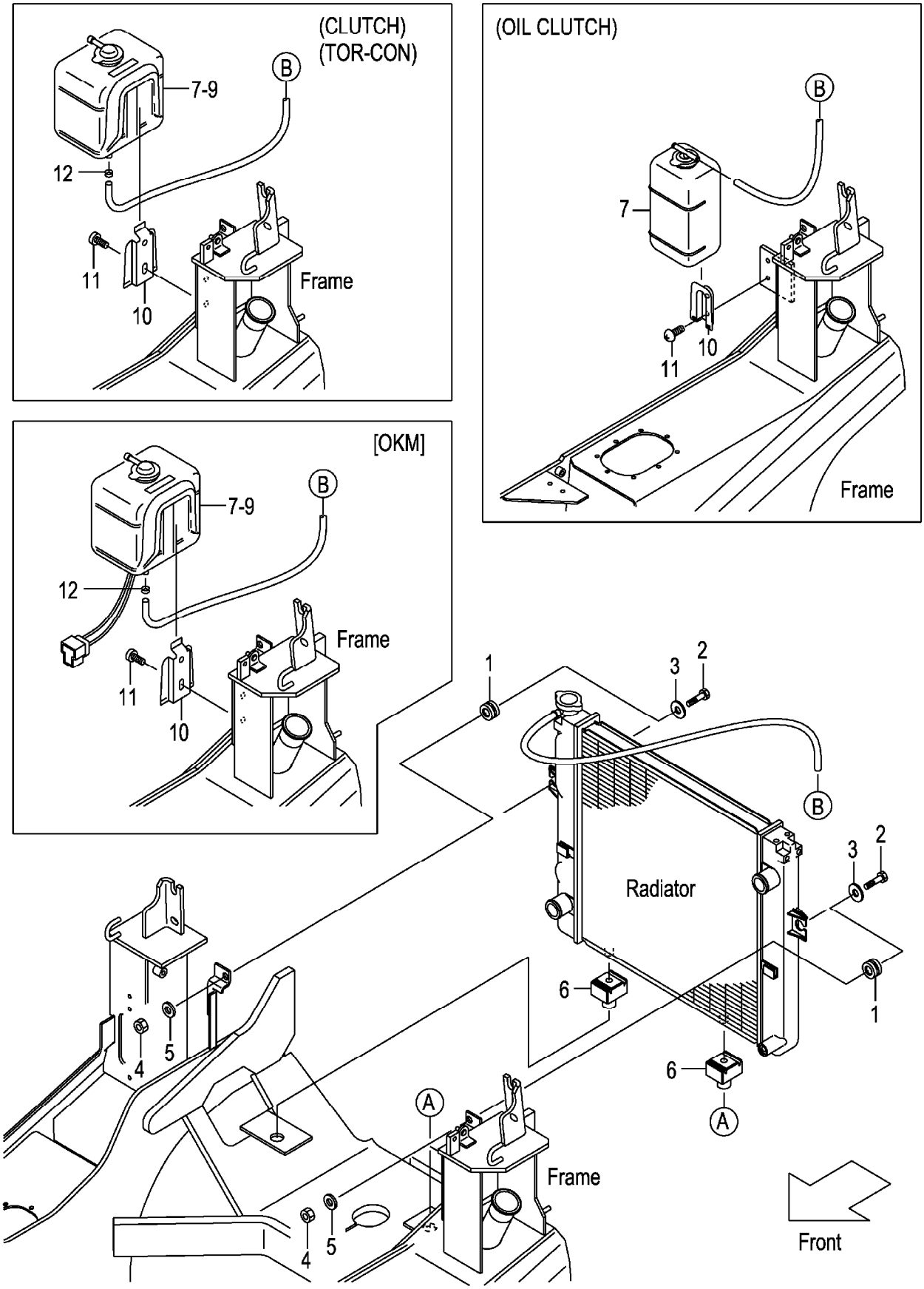

A:FG20C13 FG20T13 FG25C13 FG25T13 D:FD20C13 FD20T13 FD25C13 FD25T13
B:FG20C3 FG20T3 FG25C3 FG25T3 E:FD20C3 FD20T3 FD25C3 FD25T3
C:FG20W3 FG25W3 F:FD20W3 FD25W3

**FIG.13**
(F7022150)

| Item No | Part No. | Mark | Description | | Req'd | Remarks : Serial No. |
|---|---|---|---|---|---|---|
| 1 | 214A2-12001 | | RUBBER | ﾗﾊﾞｰ | 2 | |
| 2 | 214A2-12021 | | BOLT | ﾎﾞﾙﾄ | 2 | |
| 3 | 22252-32251 | | WASHER | ﾜｯｼｬ | 2 | |
| 4 | 23652-12051 | | NUT | ﾅｯﾄ | 2 | |
| 5 | 02000-00010 | | WASHER | ﾜｯｼｬ | 2 | |
| 6 | 239A2-12021 | | RUBBER | ﾗﾊﾞｰ | 2 | |
| 7 | 214A2-12111 | | TANK,RESERVE | ﾀﾝｸ | 1 | A,B,D,E |
| | | | | | | INC.8,9 |
| - | 256A2-12031 | | TANK,RESERVE | ﾀﾝｸ | 1 | C,F |
| - | 214A2-12121 | | TANK,RESERVE | ﾀﾝｸ | 1 | [OKM] INC.8,9 |
| 8 | 214A2-13001 | | CAP | ｷｬｯﾌﾟ | 1 | A,B,D,E |
| - | 214A2-13001 | | CAP | ｷｬｯﾌﾟ | 1 | [OKM] |
| 9 | 214A2-13011 | | PACKING | ﾊﾟｯｷﾝｸﾞ | 1 | A,B,D,E |
| - | 214A2-13011 | | PACKING | ﾊﾟｯｷﾝｸﾞ | 1 | [OKM] |
| 10 | 214A2-12141 | | BRACKET | ﾌﾞﾗｹｯﾄ | 1 | A,B,D,E |
| - | 256A2-12041 | | BRACKET | ﾌﾞﾗｹｯﾄ | 1 | C,F |
| - | 214A2-12141 | | BRACKET | ﾌﾞﾗｹｯﾄ | 1 | [OKM] |
| 11 | 214A2-42611 | | SCREW | ｽｸﾘｭ | 2 | |
| 12 | 214A2-12201 | | CLIP | ｸﾘｯﾌﾟ | 1 | A,B,D,E |
| - | 214A2-12201 | | CLIP | ｸﾘｯﾌﾟ | 1 | [OKM] |

## FIG.14 RADIATOR HOSE (GASOLINE)

(F7022160) ﾗｼﾞｴｰﾀﾎｰｽ

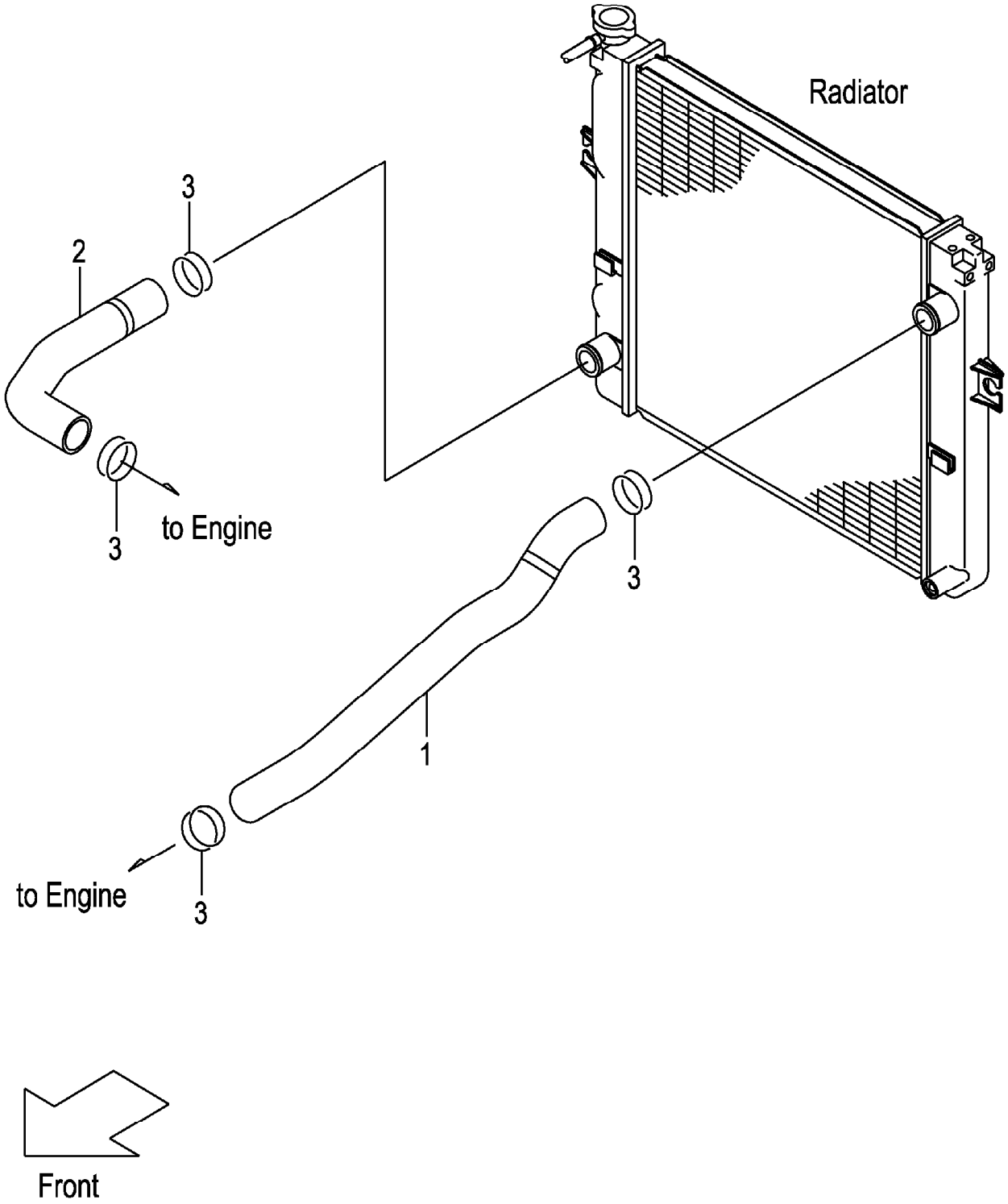

**FIG.14**

(F7022160)

A:FG20C13 FG20T13 FG25C13 FG25T13
B:FG20C3 FG20T3 FG25C3 FG25T3 FG20W3 FG25W3

| Item No | Part No. | Mark | Description | Req'd | Remarks : Serial No. |
|---|---|---|---|---|---|
| 1 | 22B52-12001 | | HOSE,UPPER ﾎｰｽ | 1 | |
| 2 | 22B52-12011 | | HOSE,LOWER ﾎｰｽ | 1 | |
| 3 | 04911-00044 | | CLIP ｸﾘｯﾌﾟ | 4 | |

## FIG.15 RADIATOR HOSE (DIESEL)

(F7022170) ﾗｼﾞｴｰﾀﾎｰｽ

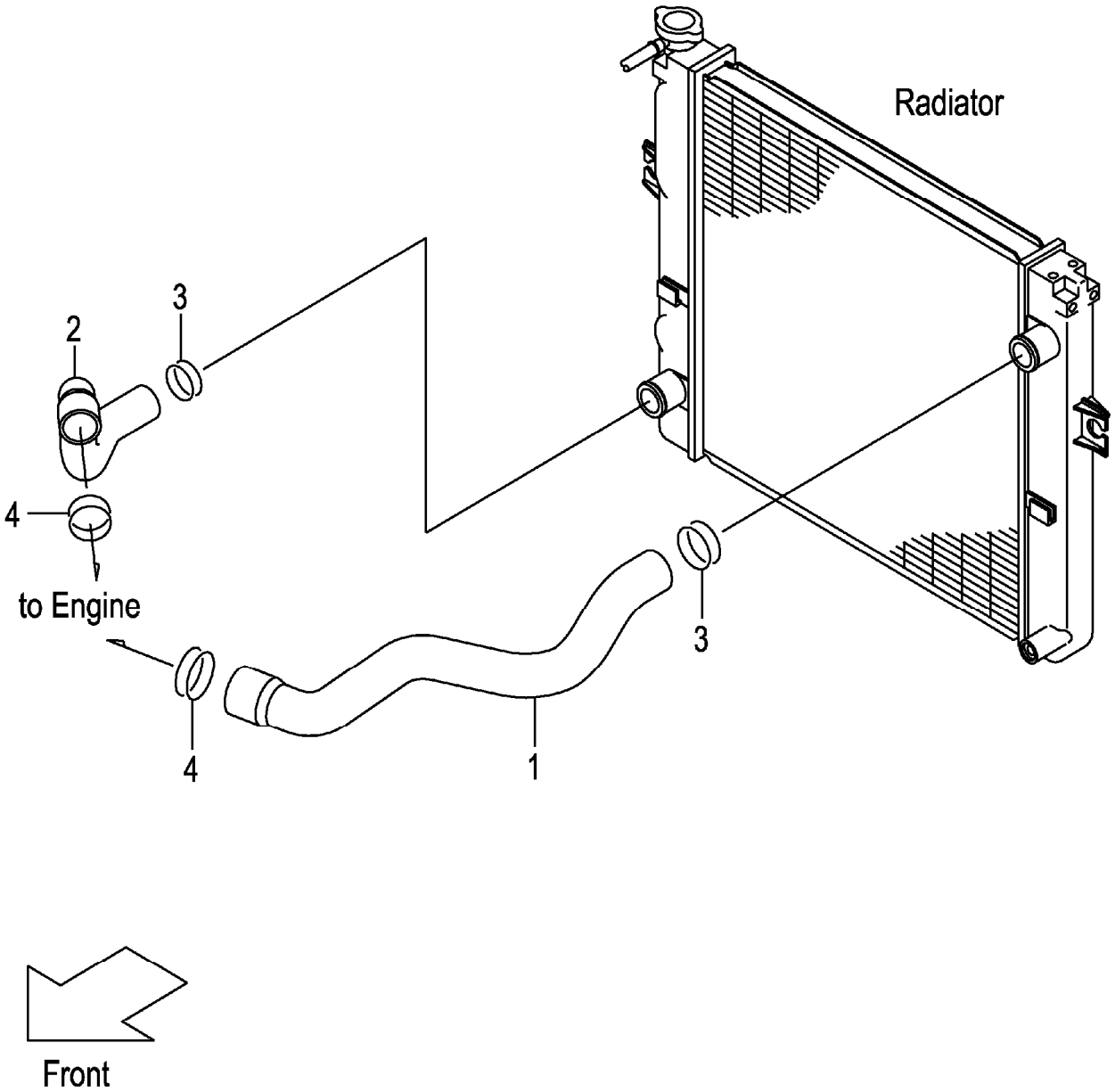

**FIG.15**

(F7022170)

A:FD20C13 FD20T13 FD25C13 FD25T13
B:FD20C3 FD20T3 FD25C3 FD25T3 FD20W3 FD25W3

| Item No | Part No. | Mark | Description | Req'd | Remarks : Serial No. |
|---|---|---|---|---|---|
| 1 | 22N52-12001 | | HOSE,UPPER ﾎｰｽ | 1 | |
| 2 | 242F2-12051 | | HOSE,LOWER ﾎｰｽ | 1 | |
| 3 | 04911-00044 | | CLIP ｸﾘｯﾌﾟ | 2 | |
| 4 | 04911-00050 | | CLIP ｸﾘｯﾌﾟ | 2 | |

# FIG.16 DUST SCREEN [DSR006][DSR008]

(F7022180) ﾀﾞｽﾄｽｸﾘｰﾝ

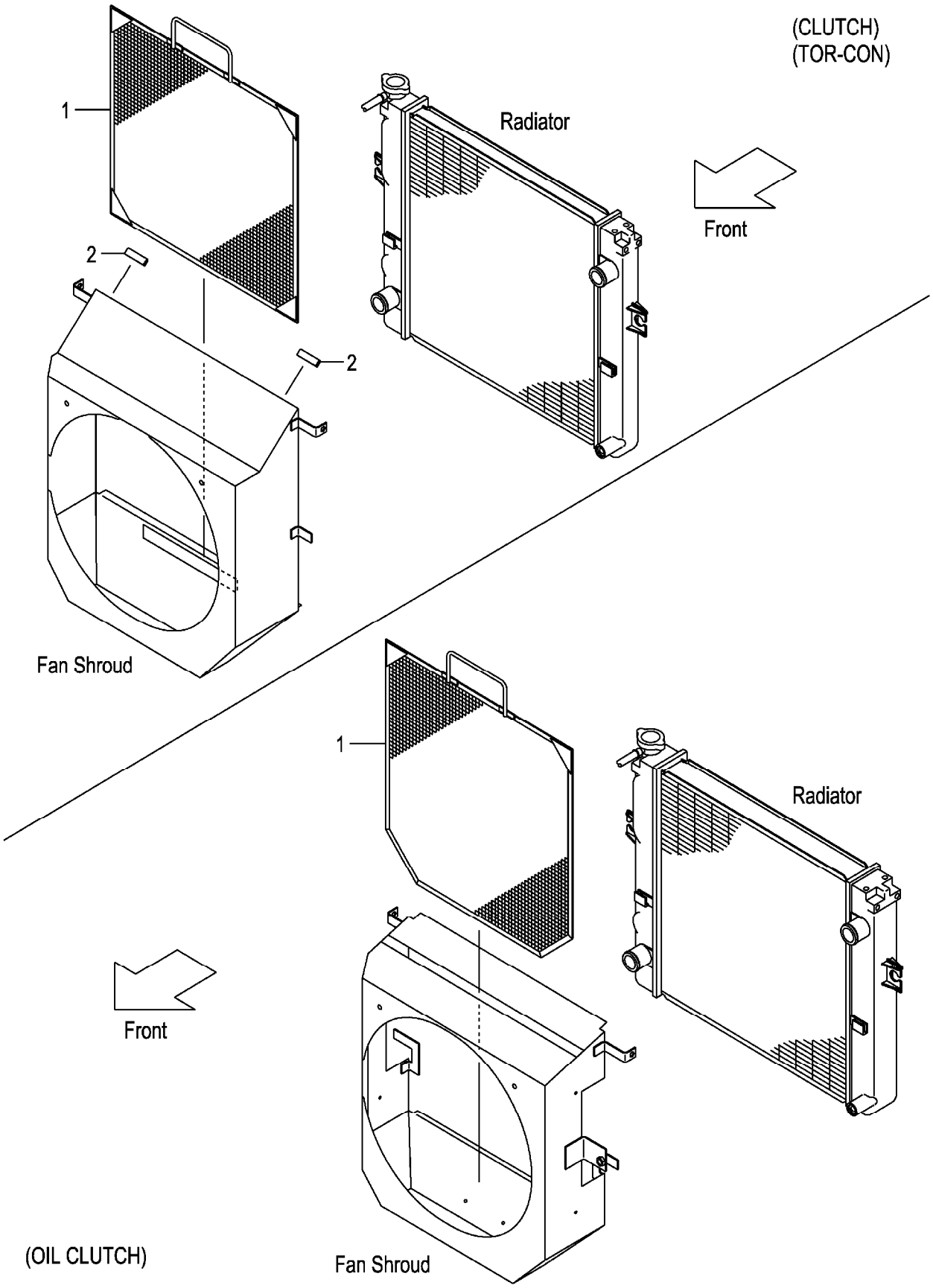

A:FG20C13 FG20T13 FG25C13 FG25T13 D:FD20C13 FD20T13 FD25C13 FD25T13
B:FG20C3 FG20T3 FG25C3 FG25T3 E:FD20C3 FD20T3 FD25C3 FD25T3
C:FG20W3 FG25W3

**FIG.16**
(F7022180)

| Item No | Part No. | Mark | Description | Req'd | Remarks : Serial No. |
|---|---|---|---|---|---|
| 1 | 539A6-52051 | | SCREEN,DUST ｽｸﾘｰﾝ | 1 | A,B,D,E [DSR006] |
| - | 539H6-52051 | | SCREEN,DUST ｽｸﾘｰﾝ | 1 | C [DSR006] |
| - | 539A6-52151 | | SCREEN,DUST ｽｸﾘｰﾝ | 1 | A,B,D,E [DSR008] |
| - | 539H6-52151 | | SCREEN,DUST ｽｸﾘｰﾝ | 1 | C [DSR008] |
| 2 | 209P6-42831 | | EDGING ｴｯｼﾞﾝｸﾞ | 2 | A,B,D,E [DSR006][DSR008] |

## FIG.17 FUEL SYSTEM (GASOLINE)

(F7022210) フューエルシステム

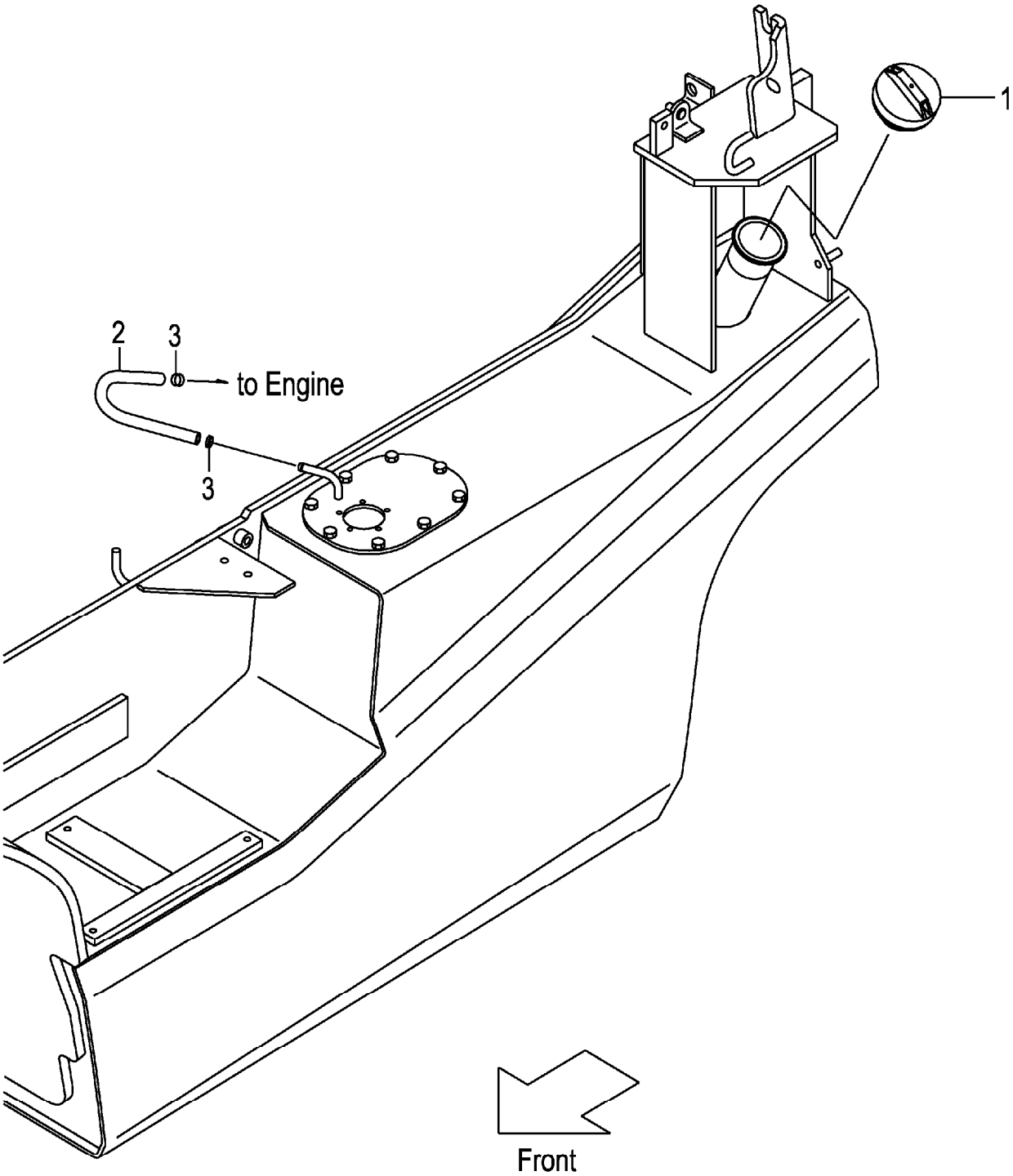

A:FG20C13 FG20T13 FG25C13 FG25T13
B:FG20C3 FG20T3 FG25C3 FG25T3 FG20W3 FG25W3

| Item No | Part No. | Mark | Description | | Req'd | Remarks : Serial No. |
|---|---|---|---|---|---|---|
| 1 | 216G2-22051 | | CAP,FUEL | ｷｬｯﾌﾟ | 1 | |
| 2 | 21152-22151 | | HOSE,FUEL | ﾎｰｽ | 1 | |
| 3 | 22192-22091 | | CLIP | ｸﾘｯﾌﾟ | 2 | |

# FIG.18 FUEL SYSTEM (DIESEL)

(F7022220) フューエルシステム

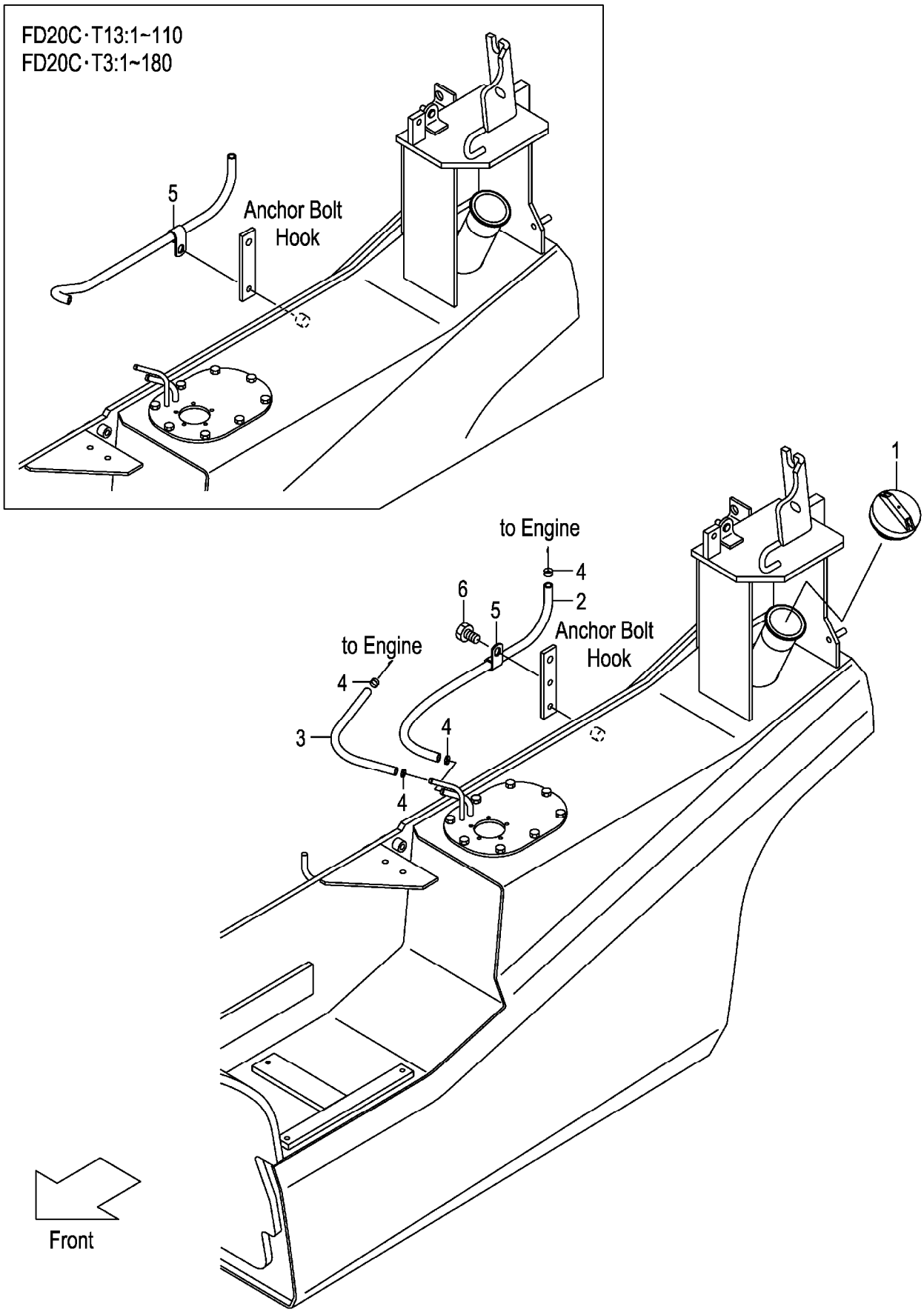

**FIG.18**

(F7022220)

A:FD20C13 FD20T13 FD25C13 FD25T13
B:FD20C3 FD20T3 FD25C3 FD25T3 FD20W3 FD25W3

| Item No | Part No. | Mark | Description | | Req'd | Remarks : Serial No. |
|---|---|---|---|---|---|---|
| 1 | 216G2-22051 | | CAP,FUEL | ｷｬｯﾌﾟ | 1 | |
| 2 | 251A2-22001 | | HOSE,FUEL | ﾎｰｽ | 1 | |
| 3 | 25492-22001 | | HOSE,FUEL | ﾎｰｽ | 1 | |
| 4 | 22192-22091 | | CLIP | ｸﾘｯﾌﾟ | 4 | |
| 5 | 26602-42081 | | CLIP | ｸﾘｯﾌﾟ | 1 | |
| 6 | 01185-08016 | | BOLT | ﾎﾞﾙﾄ | 1 | A:111- |
| | | | | | | B:181- |

# FIG.19 EXHAUST SYSTEM

(F7022310) エキゾーストシステム

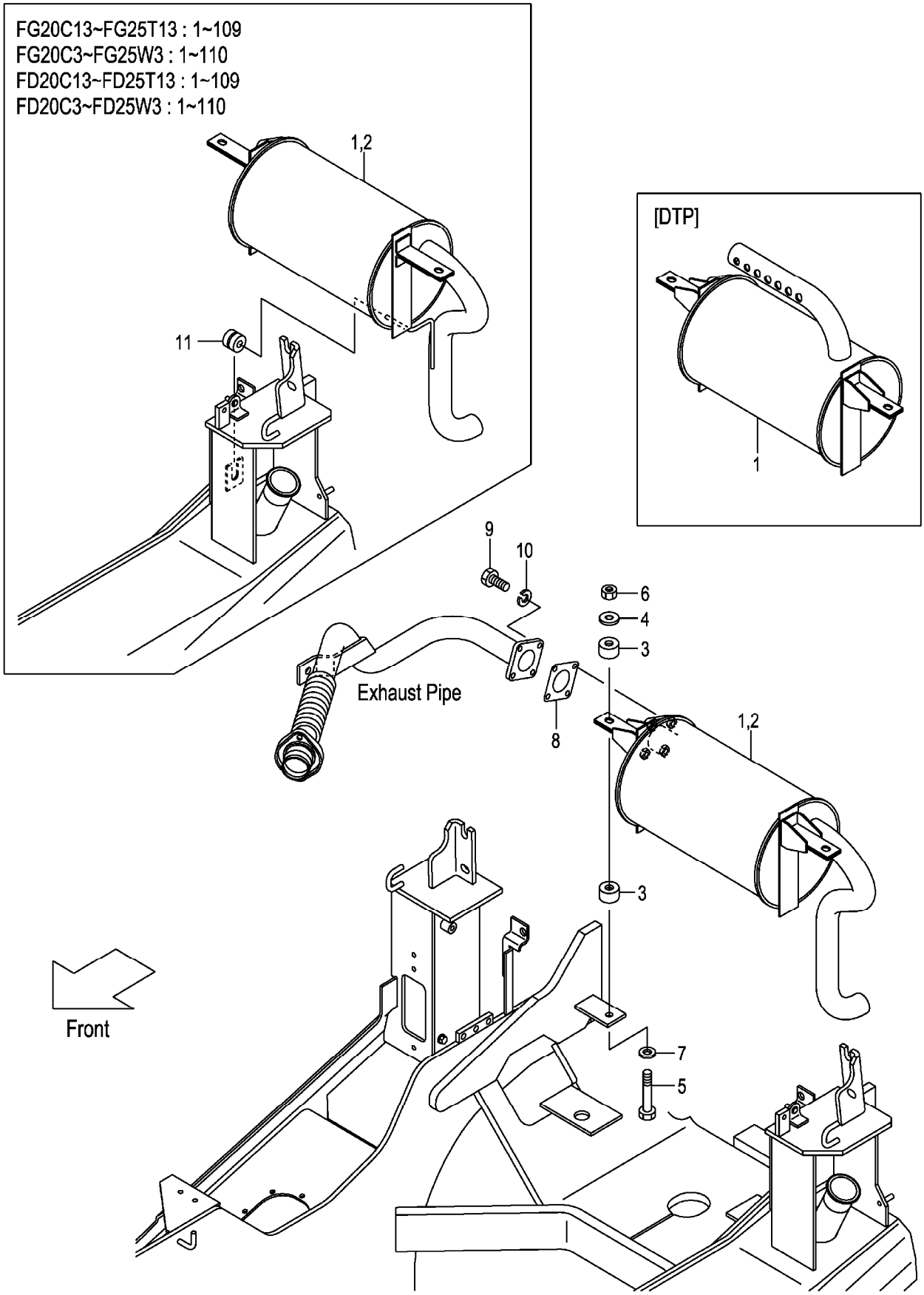

A:FG20C13 FG20T13 FG25C13 FG25T13 C:FD20C13 FD20T13 FD25C13 FD25T13 (F7022310)
B:FG20C3 FG20T3 FG25C3 FG25T3 FG20W3 FG25W3 D:FD20C3 FD20T3 FD25C3 FD25T3 FD20W3 FD25W3

| Item No | Part No. | Mark | Description | | Req'd | Remarks : Serial No. |
|---|---|---|---|---|---|---|
| 1 | 22N52-30101 | | MUFFLER,2T | ﾏﾌﾗ | 1 | |
| - | 52B51-70101 | | MUFFLER,2T | ﾏﾌﾗ | 1 | A,B |
| | | | | | | [EPM] INC.2 |
| - | 52N51-70101 | | MUFFLER,2T | ﾏﾌﾗ | 1 | C,D |
| | | | | | | [EPM] INC.2 |
| - | 52N51-70201 | | MUFFLER,2T | ﾏﾌﾗ | 1 | [CBM] |
| - | 52N51-70301 | | MUFFLER | ﾏﾌﾗ | 1 | [DTP] |
| 2 | 532A1-70201 | | CATALYST | ｷｬﾀﾘｽﾄ | 1 | [EPM] |
| 3 | 22252-32241 | | RUBBER,CUSHION | ﾗﾊﾞｰ | 4 | |
| 4 | 22252-32251 | | WASHER | ﾜｯｼｬ | 2 | |
| 5 | 21232-32551 | | BOLT | ﾎﾞﾙﾄ | 2 | |
| 6 | 23652-12051 | | NUT | ﾅｯﾄ | 2 | |
| 7 | 02000-00010 | | WASHER | ﾜｯｼｬ | 2 | |
| 8 | 217G2-32001 | | GASKET | ｶﾞｽｹｯﾄ | 1 | |
| 9 | 01100-08030 | | BOLT | ﾎﾞﾙﾄ | 4 | |
| 10 | 02010-00008 | | WASHER | ﾜｯｼｬ | 4 | |
| 11 | 214A2-12001 | | RUBBER | ﾗﾊﾞｰ | 1 | A,C:1-109 |
| | | | | | | B,D:1-110 |

# FIG.20 EXHAUST SYSTEM [TUE]

(F7022330) エキゾーストシステム

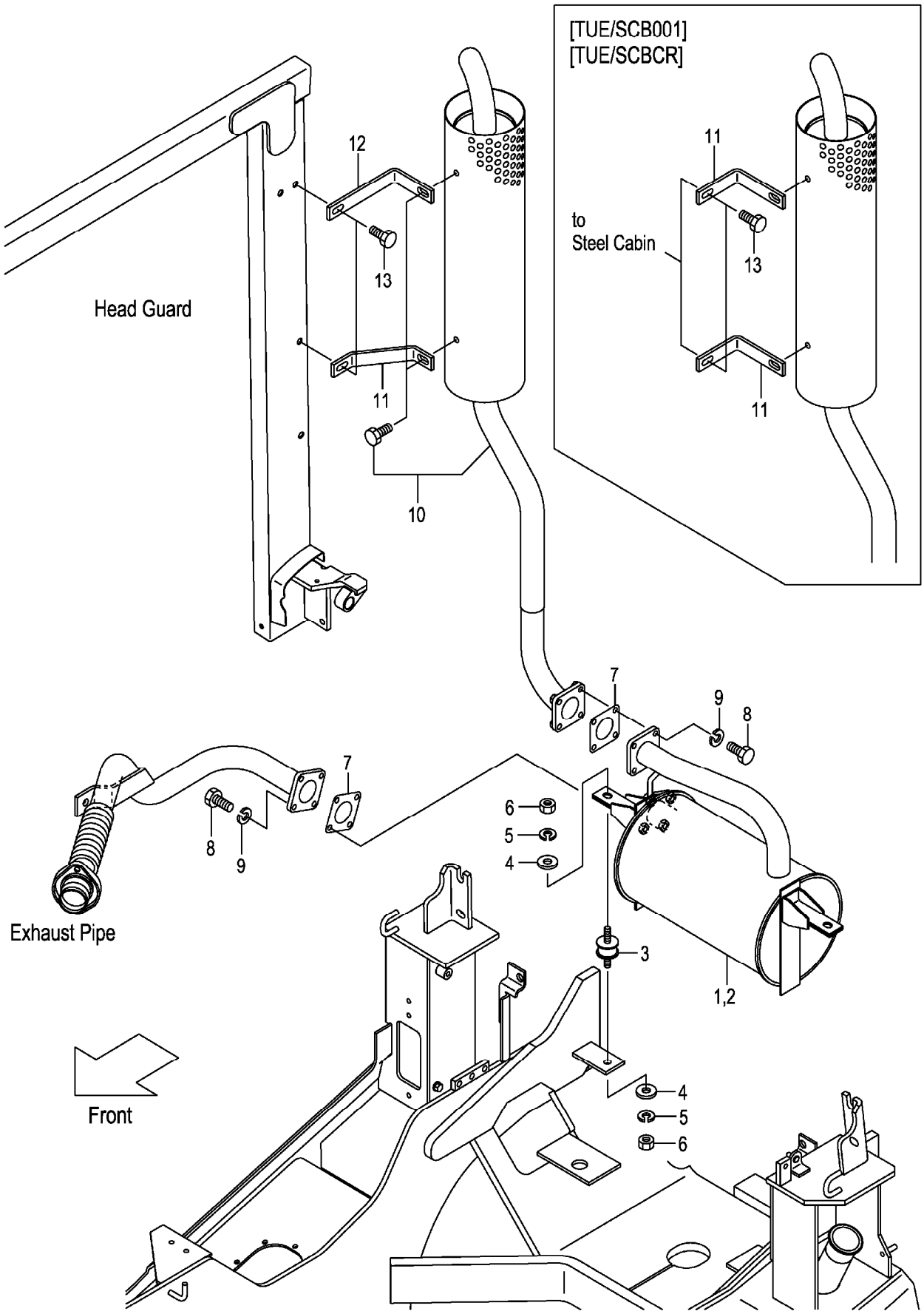

A:FG20C13 FG20T13 FG25C13 FG25T13 D:FD20C13 FD20T13 FD25C13 FD25T13
B:FG20C3 FG20T3 FG25C3 FG25T3 E:FD20C3 FD20T3 FD25C3 FD25T3
C:FG20W3 FG25W3 F:FD20W3 FD25W3

**FIG.20**
(F7022330)

| Item No | Part No. | Mark | Description | | Req'd | Remarks : Serial No. |
|---|---|---|---|---|---|---|
| 1 | 52N50-80201 | | MUFFLER | ﾏﾌﾗ | 1 | [TUE] |
| - | 52B50-80211 | | MUFFLER | ﾏﾌﾗ | 1 | A,B,C<br>[EPM/TUE] INC.2 |
| - | 52N50-80211 | | MUFFLER | ﾏﾌﾗ | 1 | D,E,F<br>[EPM/TUE] INC.2 |
| - | 52N50-80221 | | MUFFLER | ﾏﾌﾗ | 1 | D,E,F<br>[CBM/TUE] |
| 2 | 532A1-70201 | | CATALYST | ｷｬﾀﾘｽﾄ | 1 | [EPM/TUE] |
| 3 | 539A0-82201 | | RUBBER | ﾗﾊﾞｰ | 2 | [TUE] |
| 4 | 124T3-43041 | | PLATE | ﾌﾟﾚｰﾄ | 4 | [TUE] |
| 5 | 02010-00008 | | WASHER | ﾜｯｼｬ | 4 | [TUE] |
| 6 | 01400-00008 | | NUT | ﾅｯﾄ | 4 | [TUE] |
| 7 | 217G2-32001 | | GASKET | ｶﾞｽｹｯﾄ | 2 | [TUE] |
| 8 | 01182-08025 | | BOLT | ﾎﾞﾙﾄ | 8 | [TUE] |
| 9 | 02000-00008 | | WASHER | ﾜｯｼｬ | 8 | [TUE] |
| 10 | 52N50-80301 | | MUFFLER,VERTICAL | ﾏﾌﾗ | 1 | [TUE] |
| 11 | 52N50-82001 | | STAY | ｽﾃｰ | 1 | [TUE] |
| - | 52N50-82021 | | STAY | ｽﾃｰ | 2 | B,C,E,F<br>[TUE/SCB001] |
| - | 52N50-82021 | | STAY | ｽﾃｰ | 2 | B,C,E<br>[TUE/SCBCR] |
| 12 | 52N50-82011 | | STAY | ｽﾃｰ | 1 | [TUE]<br>(WITHOUT TUE/SCB001,TUE/SCBCR) |
| 13 | 01185-08020 | | BOLT | ﾎﾞﾙﾄ | 2 | [TUE] |

# FIG.21 EXHAUST SYSTEM (DIESEL):[DPF]

(F7022350) エキゾーストシステム

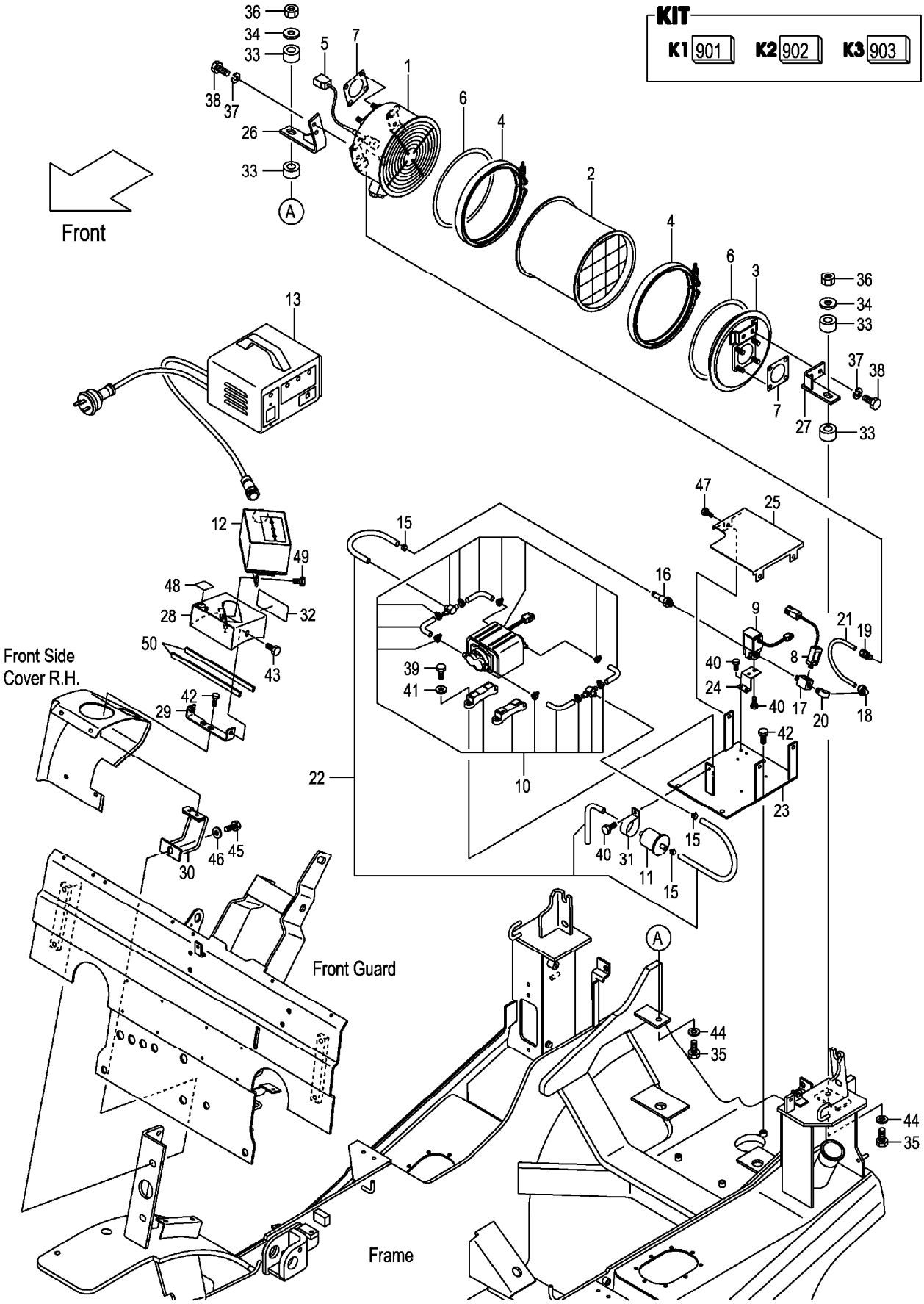

A:FD20C3 FD20T3 FD25C3 FD25T3

| Item No | Part No. | Mark | Description | | Req'd | Remarks : Serial No. |
|---|---|---|---|---|---|---|
| 901 | 509P5-90101 | K1 | KIT,DPF-MUFFLER | DPFﾏﾌﾗｷｯﾄ | 1 | [DPF] INC.1-16 |
| 902 | 509P5-92511 | K2 | KIT,PIPING | ﾊﾟｲﾋﾟﾝｸﾞｷｯﾄ | 1 | [DPF] INC.15,16 |
| A1 | 509P5-92001 | * | MUFFLER-ASSY,DPF | ﾏﾌﾗｱｯｾﾝ | 1 | [DPF] INC.1-7 |
| 903 | 509P5-92061 | K3 | KIT,GASKET | ｶﾞｽｹｯﾄｷｯﾄ | 2 | [DPF] INC.6,7 |
| 1 | 509P5-92011 | * | UNIT,INLET | ﾕﾆｯﾄ | 1 | [DPF] |
| 2 | 509P5-92021 | * | UNIT,FILTER | ﾕﾆｯﾄ | 1 | [DPF] |
| 3 | 509P5-92031 | * | UNIT,OUTLET | ﾕﾆｯﾄ | 1 | [DPF] |
| 4 | 509P5-92041 | * | V-BAND | Vﾊﾞﾝﾄﾞ | 2 | [DPF] |
| 5 | 509P5-92051 | * | SENSOR,TEMP | ｾﾝｻ | 1 | [DPF] |
| 6 | 509P5-92531 | * | GASKET,MUFFLER | ｶﾞｽｹｯﾄ | 2 | [DPF] |
| 7 | 509P5-92541 | * | GASKET,FLANGE | ｶﾞｽｹｯﾄ | 2 | [DPF] |
| 8 | 509P5-92071 | * | SENSOR,PRESS | ｾﾝｻ | 1 | [DPF] |
| 9 | 509P5-92081 | * | VALVE,SOLENOIDE | ﾊﾞﾙﾌﾞ | 1 | [DPF] |
| 10 | 509P5-92091 | * | PUMP,AIR | ﾎﾟﾝﾌﾟ | 1 | [DPF] |
| 11 | 509P5-92101 | * | FILTER,AIR | ﾌｨﾙﾀ | 1 | [DPF] |
| 12 | 509P5-92111 | * | UNIT,MONITOR | ﾕﾆｯﾄ | 1 | [DPF] |
| 13 | 509P5-92121 | * | UNIT,CONTROLLER | ﾕﾆｯﾄ | 1 | [DPF] |
| 14 | 509P5-92241 | +* | KIT,CONNECTOR | ｷｯﾄ | 1 | [DPF] |
| 15 | NO PART NO. | #* | CLIP | ｸﾘｯﾌﾟ | 3 | [DPF] |
| 16 | NO PART NO. | #* | NIPPLE | ﾆｯﾌﾟﾙ | 1 | [DPF] |
| 17 | 509P5-92181 | | THREE-WAY | ｽﾘｰｳｴｲ | 1 | [DPF] |
| 18 | 509P5-92201 | | ELBOW | ｴﾙﾎﾞ | 1 | [DPF] |
| 19 | 509S5-92241 | | NIPPLE | ﾆｯﾌﾟﾙ | 1 | [DPF] |
| 20 | 04112-00202 | | ELBOW | ｴﾙﾎﾞ | 1 | [DPF] |
| 21 | 509P5-92211 | | PIPE,COPPER | ﾊﾟｲﾌﾟ | 1 | [DPF] |
| 22 | 509P5-92231 | | HOSE | ﾎｰｽ | 1 | [DPF] |
| 23 | 52N55-92261 | | BRACKET,PUMP | ﾌﾞﾗｹｯﾄ | 1 | [DPF] |
| 24 | 539A5-92251 | | BRACKET,VALVE | ﾌﾞﾗｹｯﾄ | 1 | [DPF] |
| 25 | 52N55-92601 | | COVER | ｶﾊﾞｰ | 1 | [DPF] |
| 26 | 52N55-92131 | | BRACKET,MUFFLER,RH | ﾌﾞﾗｹｯﾄ | 1 | [DPF] |
| 27 | 539A5-92141 | | BRACKET,MUFFLER,LH | ﾌﾞﾗｹｯﾄ | 1 | [DPF] |
| 28 | 52N55-92401 | | BRACKET,MONITOR | ﾌﾞﾗｹｯﾄ | 1 | [DPF] |
| 29 | 52N55-92671 | | BRACKET | ﾌﾞﾗｹｯﾄ | 1 | [DPF] |
| 30 | 52N55-92631 | | BRACKET | ﾌﾞﾗｹｯﾄ | 1 | [DPF] |
| 31 | 509P5-92491 | | BAND | ﾊﾞﾝﾄﾞ | 1 | [DPF] |
| 32 | 509P5-92521 | | DECAL,DPF-CAUTION | ﾃﾞｶﾙ | 1 | [DPF] |
| 33 | 22252-32241 | | RUBBER | ﾗﾊﾞｰ | 4 | [DPF] |
| 34 | 22252-32251 | | WASHER | ﾜｯｼｬ | 2 | [DPF] |
| 35 | 21232-32551 | | BOLT | ﾎﾞﾙﾄ | 2 | [DPF] |
| 36 | 23652-12051 | | NUT | ﾅｯﾄ | 2 | [DPF] |
| 37 | 02013-00008 | | WASHER | ﾜｯｼｬ | 4 | [DPF] |
| 38 | 01109-08020 | | BOLT | ﾎﾞﾙﾄ | 4 | [DPF] |
| 39 | 01170-04012 | | BOLT | ﾎﾞﾙﾄ | 4 | [DPF] |
| 40 | 01183-05010 | | BOLT | ﾎﾞﾙﾄ | 5 | [DPF] |
| 41 | 02000-00004 | | WASHER | ﾜｯｼｬ | 4 | [DPF] |
| 42 | 01185-08016 | | BOLT | ﾎﾞﾙﾄ | 5 | [DPF] |
| 43 | 273A6-42471 | | BOLT | ﾎﾞﾙﾄ | 2 | [DPF] |
| 44 | 02000-00010 | | WASHER | ﾜｯｼｬ | 2 | [DPF] |
| 45 | 01186-12030 | | BOLT | ﾎﾞﾙﾄ | 1 | [DPF] |
| 46 | 02000-00012 | | WASHER | ﾜｯｼｬ | 1 | [DPF] |

# FIG.21 EXHAUST SYSTEM (DIESEL):[DPF]

(F7022350) エキゾーストシステム

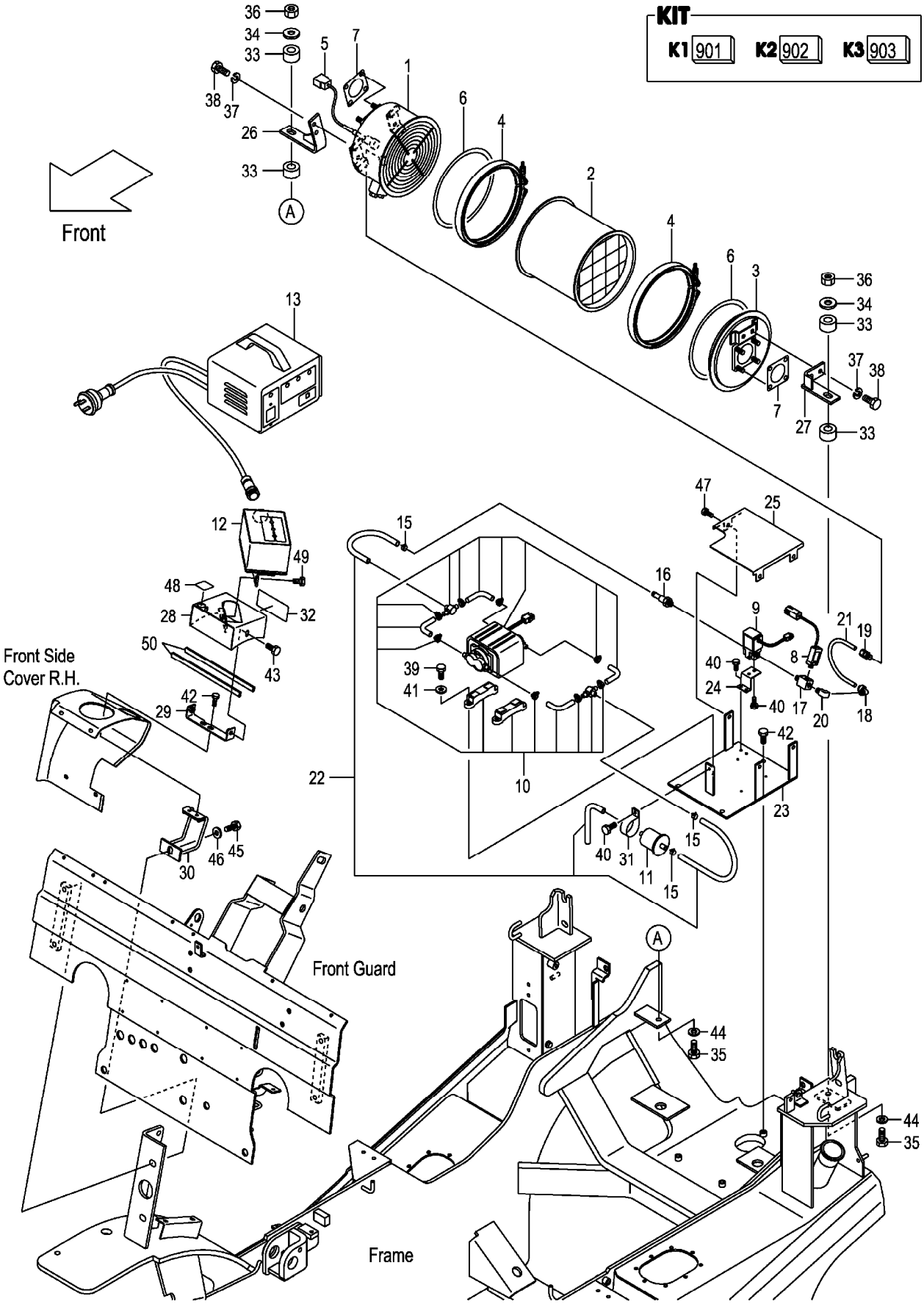

**FIG.21**

(F7022350)

A:FD20C3 FD20T3 FD25C3 FD25T3

| Item No | Part No. | Mark | Description | | Req'd | Remarks : Serial No. |
|---|---|---|---|---|---|---|
| 47 | 01183-08012 | | BOLT | ﾎﾞﾙﾄ | 3 | [DPF] |
| 48 | 229F6-42201 | | SEAL,PANEL-COVER,A | ｼｰﾙ | 1 | [DPF] |
| 49 | 01183-06012 | | BOLT | ﾎﾞﾙﾄ | 2 | [DPF] |
| 50 | 524W3-83091 | | EDGING | ｴｯｼﾞﾝｸﾞ | 2 | [DPF] |

# M E M O

# M E M O

# FIG.22 DPF WIRE HARNESS (DIESEL):[DPF]

(F7022360) **DPFﾜｲﾔﾊｰﾈｽ**

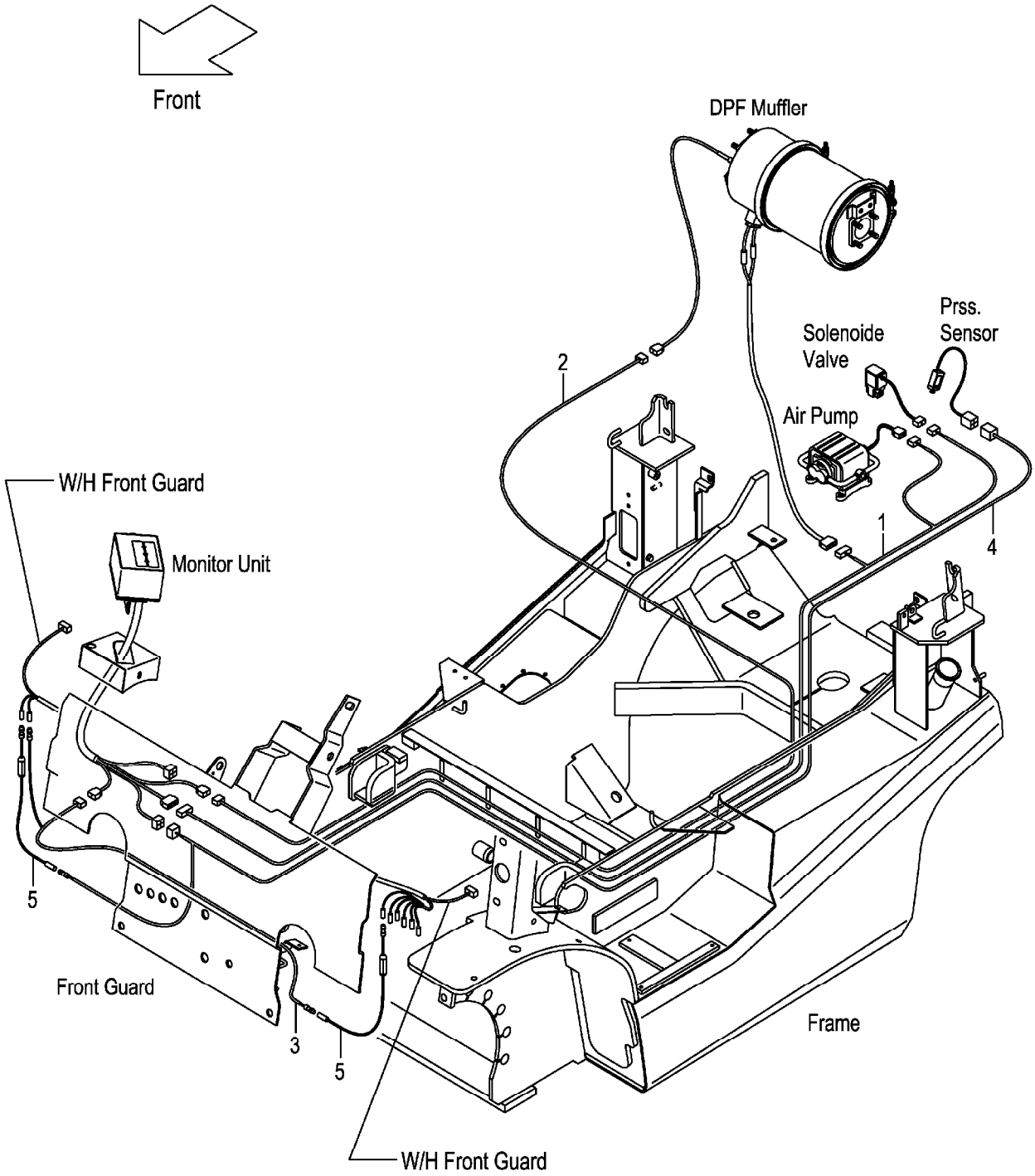

**FIG.22**

(F7022360)

A:FD20C3 FD20T3 FD25C3 FD25T3

| Item No | Part No. | Mark | Description | Req'd | Remarks : Serial No. |
|---|---|---|---|---|---|
| 1 | 52N55-92441 | | WIRE-HARNESS ﾜｲﾔﾊｰﾈｽ | 1 | [DPF] (MONITOR-HEATER&PUMP&VALVE) |
| 2 | 52N55-92451 | | WIRE-HARNESS ﾜｲﾔﾊｰﾈｽ | 1 | [DPF](MONITOR-TEMP SENSOR) |
| 3 | 52N55-92381 | | WIRE-HARNESS ﾜｲﾔﾊｰﾈｽ | 1 | [DPF](MONITOR-OPT TERMINAL) |
| 4 | 52N55-92471 | | WIRE-HARNESS ﾜｲﾔﾊｰﾈｽ | 1 | [DPF] (MONITOR-PRESSURE SENSOR) |
| 5 | 509P5-92481 | | WIRE-HARNESS ﾜｲﾔﾊｰﾈｽ | 2 | [DPF](FUSE BOX) |

# FIG.23 FRONT TUBE & JOINT (GASOLINE)

(F7022370) フロントチューブ&ジョイント

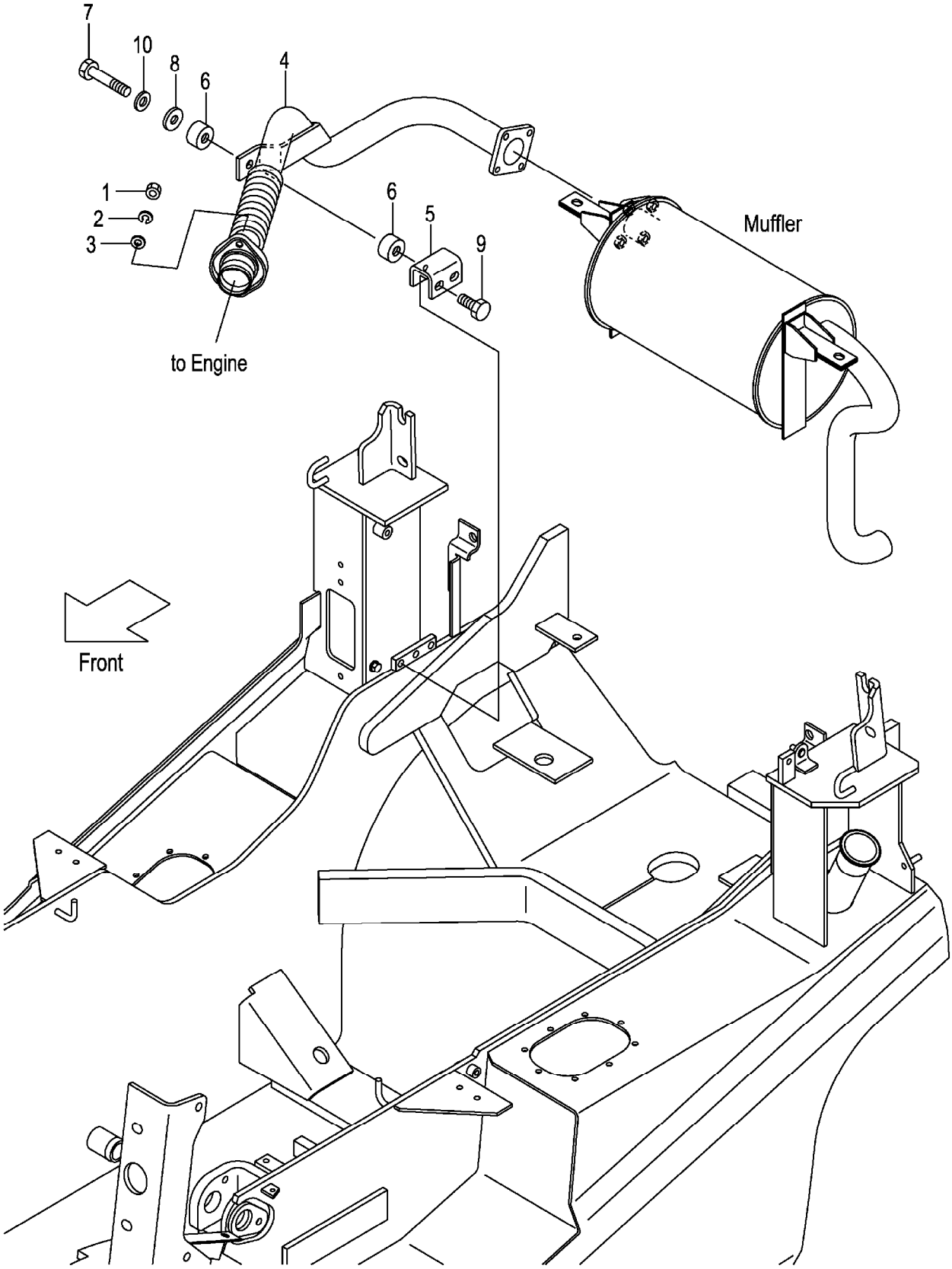

A:FG20C13 FG20T13 FG25C13 FG25T13
B:FG20C3 FG20T3 FG25C3 FG25T3 FG20W3 FG25W3

| Item No | Part No. | Mark | Description | | Req'd | Remarks : Serial No. |
|---|---|---|---|---|---|---|
| 1 | 01400-20008 | | NUT | ﾅｯﾄ | 2 | |
| 2 | 02010-00008 | | WASHER | ﾜｯｼｬ | 2 | |
| 3 | 02000-00008 | | WASHER | ﾜｯｼｬ | 2 | |
| 4 | 22B52-30111 | | PIPE,EXHAUST,K | ﾊﾟｲﾌﾟ | 1 | |
| 5 | 22N52-32021 | | BRACKET | ﾌﾞﾗｹｯﾄ | 1 | A:110-<br>B:111- |
| 6 | 22252-32241 | | RUBBER,CUSHION | ﾗﾊﾞｰ | 2 | A:110-<br>B:111- |
| 7 | 21232-32551 | | BOLT | ﾎﾞﾙﾄ | 1 | A:110-<br>B:111- |
| 8 | 22252-32251 | | WASHER | ﾜｯｼｬ | 1 | A:110-110<br>B:111-121 |
| - | 23451-02011 | | WASHER | ﾜｯｼｬ | 1 | A:111-<br>B:122- |
| 9 | 01186-10020 | | BOLT | ﾎﾞﾙﾄ | 2 | A:110-<br>B:111- |
| 10 | 02000-00010 | | WASHER | ﾜｯｼｬ | 1 | A:111-<br>B:122- |

# FIG.24 FRONT TUBE & JOINT (DIESEL)

(F7022380) フロントチューブ&ジョイント

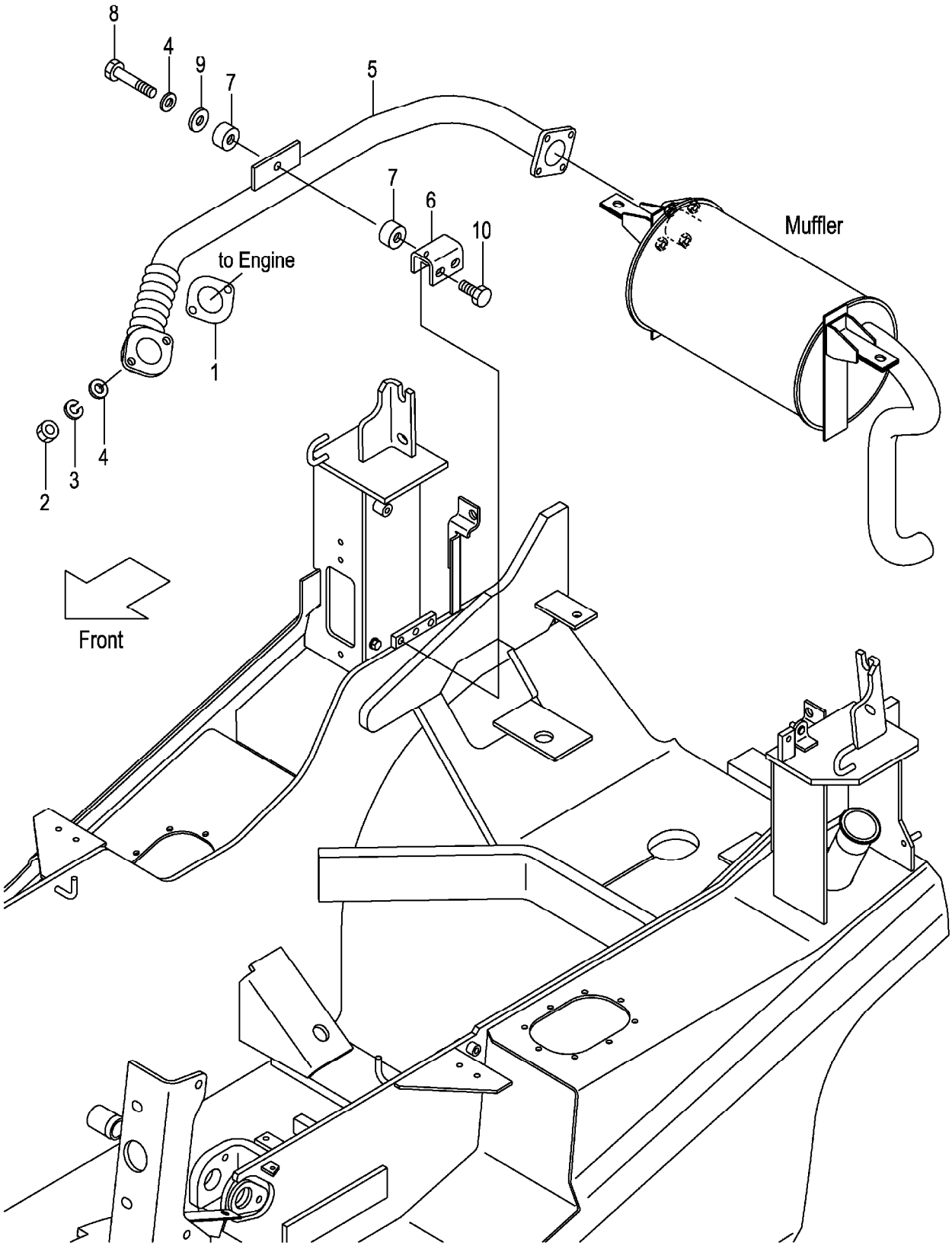

**FIG.24**

(F7022380)

A:FD20C13 FD20T13 FD25C13 FD25T13
B:FD20C3 FD20T3 FD25C3 FD25T3 FD20W3 FD25W3

| Item No | Part No. | Mark | Description | | Req'd | Remarks : Serial No. |
|---|---|---|---|---|---|---|
| 1 | 22N92-32001 | | GASKET | ｶﾞｽｹｯﾄ | 1 | |
| 2 | 01400-20010 | | NUT | ﾅｯﾄ | 2 | |
| 3 | 02010-00010 | | WASHER | ﾜｯｼｬ | 2 | |
| 4 | 02000-00010 | | WASHER | ﾜｯｼｬ | 2 | A:1-110 |
| | | | | | | B:1-180 |
| - | 02000-00010 | | WASHER | ﾜｯｼｬ | 3 | A:111- |
| | | | | | | B:181- |
| 5 | 22N52-30111 | | PIPE,EXHAUST,TD27 | ﾊﾟｲﾌﾟ | 1 | |
| 6 | 22N52-32021 | | BRACKET | ﾌﾞﾗｹｯﾄ | 1 | A:110- |
| | | | | | | B:111- |
| 7 | 22252-32241 | | RUBBER,CUSHION | ﾗﾊﾞｰ | 2 | A:110- |
| | | | | | | B:111- |
| 8 | 21232-32551 | | BOLT | ﾎﾞﾙﾄ | 1 | A:110- |
| | | | | | | B:111- |
| 9 | 22252-32251 | | WASHER | ﾜｯｼｬ | 1 | A:110-110 |
| | | | | | | B:111-180 |
| - | 23451-02011 | | WASHER | ﾜｯｼｬ | 1 | A:111- |
| | | | | | | B:181- |
| 10 | 01186-10020 | | BOLT | ﾎﾞﾙﾄ | 2 | A:110- |
| | | | | | | B:111- |

# FIG.25 FRONT TUBE & JOINT (DIESEL):[DPF]

(F7022390) フロントチューブ&ジョイント

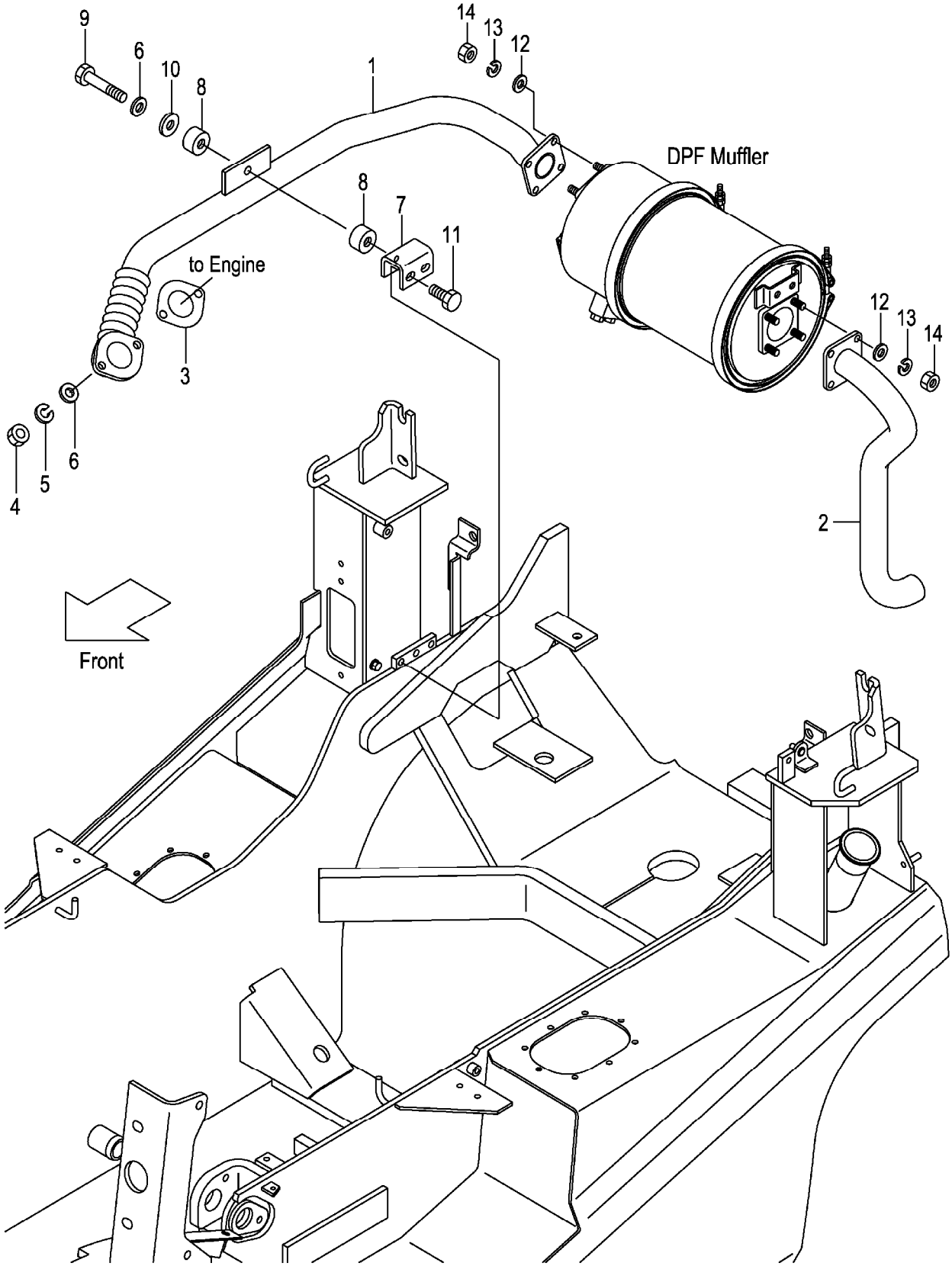

**FIG.25**

(F7022390)

A:FD20C3 FD20T3 FD25C3 FD25T3

| Item No | Part No. | Mark | Description | | Req'd | Remarks : Serial No. |
|---|---|---|---|---|---|---|
| 1 | 52N55-92321 | | PIPE,EXHAUST,DPF | ﾊﾟｲﾌﾟ | 1 | [DPF] |
| 2 | 52N55-92341 | | TUBE,TAIL | ﾁｭｰﾌﾞ | 1 | [DPF] |
| 3 | 22N92-32001 | | GASKET | ｶﾞｽｹｯﾄ | 1 | [DPF] |
| 4 | 01400-20010 | | NUT | ﾅｯﾄ | 2 | [DPF] |
| 5 | 02010-00010 | | WASHER | ﾜｯｼｬ | 2 | [DPF] |
| 6 | 02000-00010 | | WASHER | ﾜｯｼｬ | 3 | [DPF] |
| 7 | 22N52-32021 | | BRACKET | ﾌﾞﾗｹｯﾄ | 1 | [DPF] |
| 8 | 22252-32241 | | RUBBER,CUSHION | ﾗﾊﾞｰ | 2 | [DPF] |
| 9 | 21232-32551 | | BOLT | ﾎﾞﾙﾄ | 1 | [DPF] |
| 10 | 23451-02011 | | WASHER | ﾜｯｼｬ | 1 | [DPF] |
| 11 | 01186-10020 | | BOLT | ﾎﾞﾙﾄ | 2 | [DPF] |
| 12 | 02001-00008 | | WASHER | ﾜｯｼｬ | 8 | [DPF] |
| 13 | 02013-00008 | | WASHER | ﾜｯｼｬ | 8 | [DPF] |
| 14 | 01400-30008 | | NUT | ﾅｯﾄ | 8 | [DPF] |

# FIG.26 COMBINATION METER

(F7022410) コンビネーションメータ

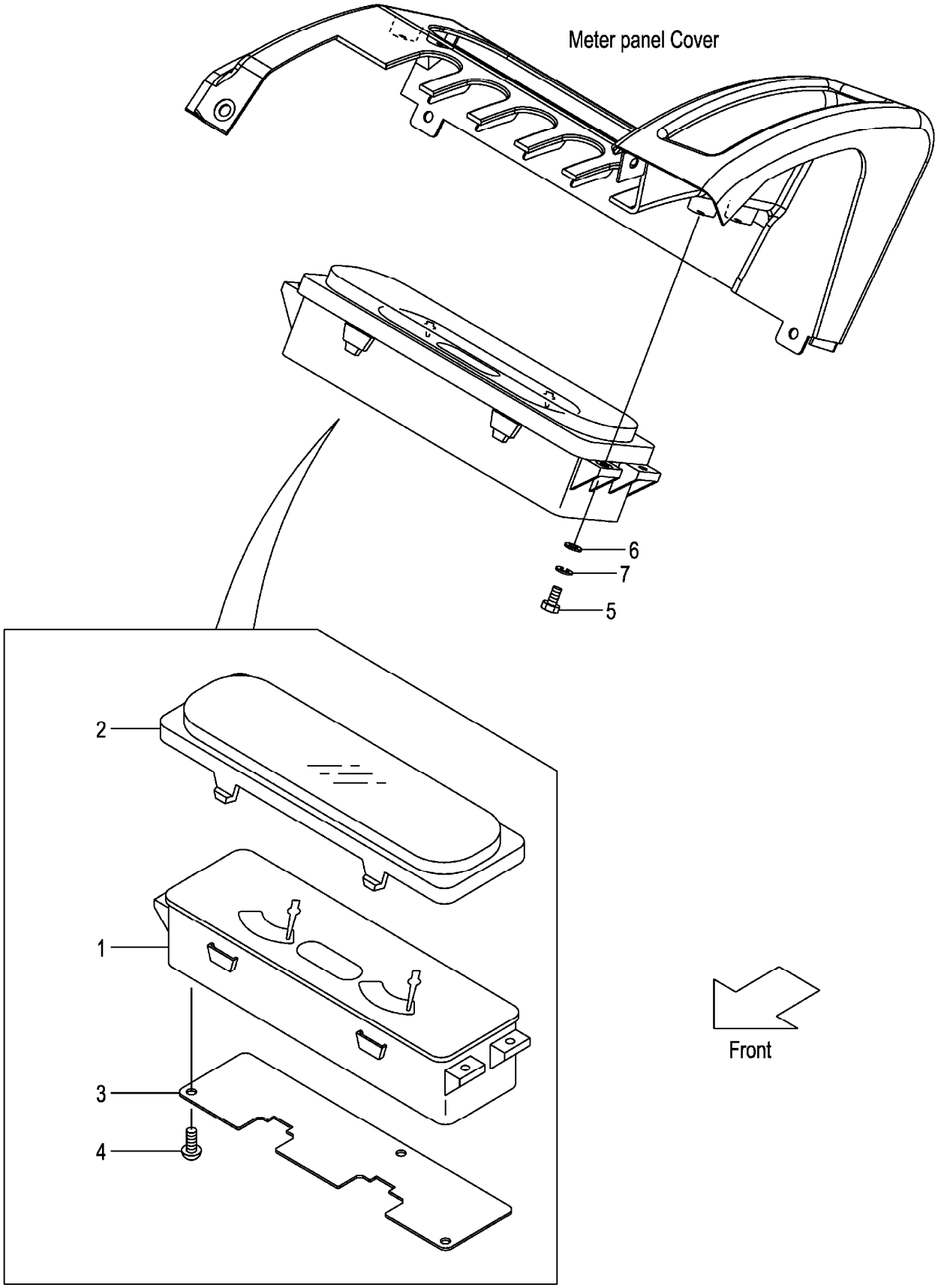

A:FG20C13 FG20T13 FG25C13 FG25T13 D:FD20C13 FD20T13 FD25C13 FD25T13
B:FG20C3 FG20T3 FG25C3 FG25T3 E:FD20C3 FD20T3 FD25C3 FD25T3
C:FG20W3 FG25W3 F:FD20W3 FD25W3

**FIG.26**
(F7022410)

| Item No | Part No. | Mark | Description | Req'd | Remarks : Serial No. |
|---|---|---|---|---|---|
| A1 | 22B52-40301 | | METER-ASSY,COMBINATION<br>ｺﾝﾋﾞﾈｰｼｮﾝﾒｰﾀｱｯｾﾝ | 1 | A,B,C<br>INC.1-4 |
| - | 22N52-40301 | | METER-ASSY,COMBINATION<br>ｺﾝﾋﾞﾈｰｼｮﾝﾒｰﾀｱｯｾﾝ | 1 | D,E,F<br>INC.1-4 |
| - | 52B56-20101 | | METER-ASSY,COMBINATION<br>ｺﾝﾋﾞﾈｰｼｮﾝﾒｰﾀｱｯｾﾝ | 1 | A,B,C<br>[OKM][SIL] INC.1-4 |
| - | 52B56-20101 | | METER-ASSY,COMBINATION<br>ｺﾝﾋﾞﾈｰｼｮﾝﾒｰﾀｱｯｾﾝ | 1 | B<br>[EXE][EXN] INC.1-4 |
| - | 52N56-20101 | | METER-ASSY,COMBINATION<br>ｺﾝﾋﾞﾈｰｼｮﾝﾒｰﾀｱｯｾﾝ | 1 | D,E,F<br>[OKM][SIL] INC.1-4 |
| - | 52N56-20101 | | METER-ASSY,COMBINATION<br>ｺﾝﾋﾞﾈｰｼｮﾝﾒｰﾀｱｯｾﾝ | 1 | E<br>[EXE][EXN] INC.1-4 |
| 1 | NO PART NO. | # | METER,COMBINATION ﾒｰﾀ | 1 | A,B,C |
| - | NO PART NO. | # | METER,COMBINATION ﾒｰﾀ | 1 | D,E,F |
| - | NO PART NO. | # | METER,COMBINATION ﾒｰﾀ | 1 | A,B,C<br>[OKM][SIL] |
| - | NO PART NO. | # | METER,COMBINATION ﾒｰﾀ | 1 | B<br>[EXE][EXN] |
| - | NO PART NO. | # | METER,COMBINATION ﾒｰﾀ | 1 | D,E,F<br>[OKM][SIL] |
| - | NO PART NO. | # | METER,COMBINATION ﾒｰﾀ | 1 | E<br>[EXE][EXN] |
| 2 | 22N52-42501 | | COVER ｶﾊﾞｰ | 1 | |
| 3 | 22N52-42511 | | PLATE ﾌﾟﾚｰﾄ | 1 | |
| 4 | 01043-03010 | | SCREW ｽｸﾘｭ | 3 | |
| 5 | 01100-04012 | | BOLT ﾎﾞﾙﾄ | 4 | A,D:1-110<br>B,C:1-121<br>E,F:1-180 |
| - | 01185-04012 | | BOLT ﾎﾞﾙﾄ | 4 | A,D:111-<br>B,C:122-<br>E,F:181- |
| 6 | 02000-00004 | | WASHER ﾜｯｼｬ | 4 | A,D:1-110<br>B,C:1-121<br>E,F:1-180 |
| 7 | 02010-00004 | | WASHER ﾜｯｼｬ | 4 | A,D:1-110<br>B,C:1-121<br>E,F:1-180 |

# FRONT GUARD WIRE HARNESS (CLUTCH)(OIL CLUTCH)

**FIG.27**

(F7022420) フロントガードワイヤハーネス

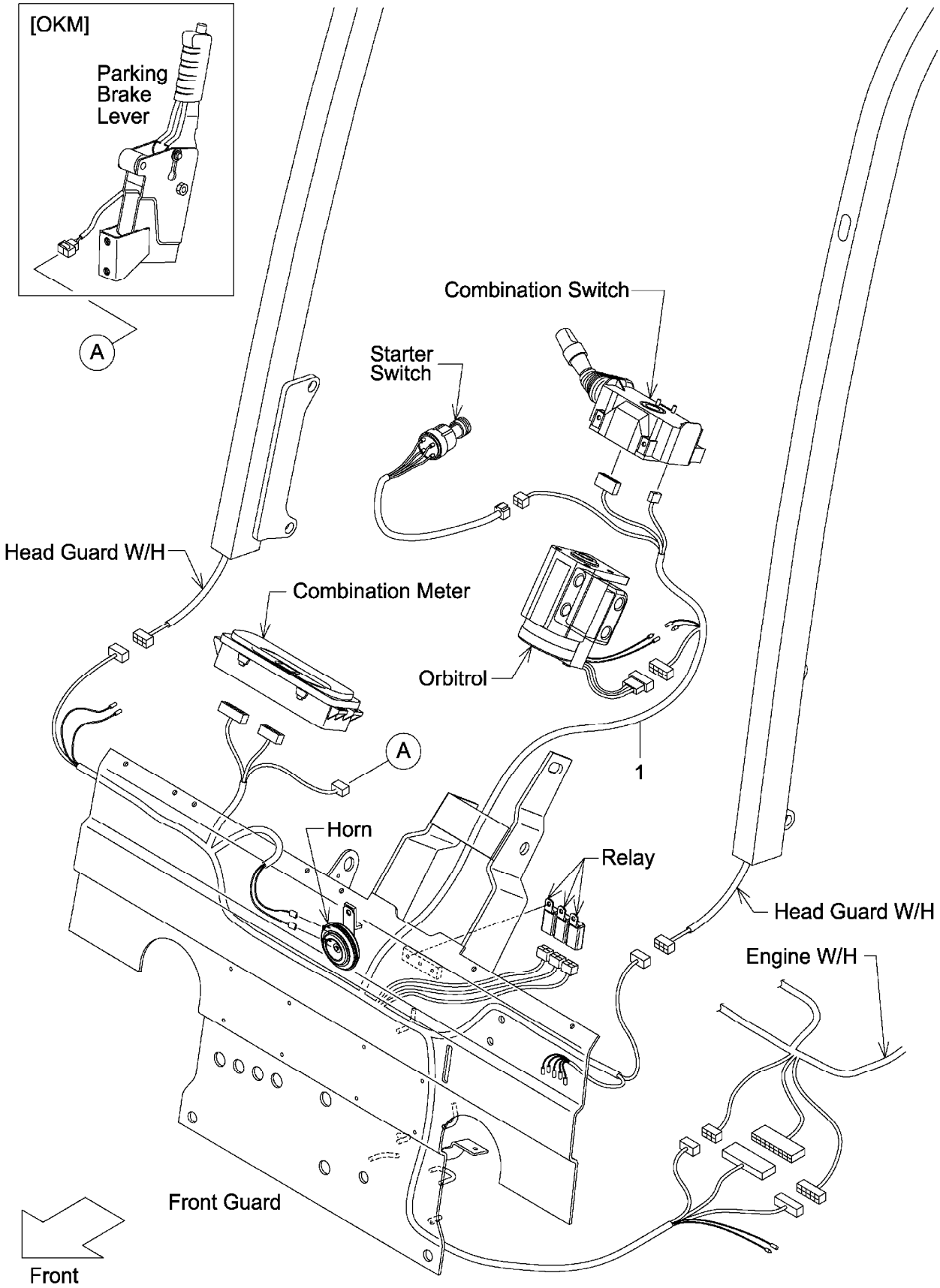

A:FG20C13 FG25C13 C:FD20C13 FD25C13
B:FG20C3 FG25C3 FG20W3 FG25W3 D:FD20C3 FD25C3 FD20W3 FD25W3

(F7022420)

| Item No | Part No. | Mark | Description | Req'd | Remarks : Serial No. |
|---|---|---|---|---|---|
| 1 | 22N42-42201 | | WIRE-HARNESS,F.GUARD ﾜｲﾔﾊｰﾈｽ | 1 | |
| - | 52N43-72101 | | WIRE-HARNESS,F.GUARD ﾜｲﾔﾊｰﾈｽ | 1 | [FC] |

# FIG.28 FRONT GUARD WIRE HARNESS (TOR-CON)

(F7022430) ﾌﾛﾝﾄｶﾞｰﾄﾞﾜｲﾔﾊｰﾈｽ

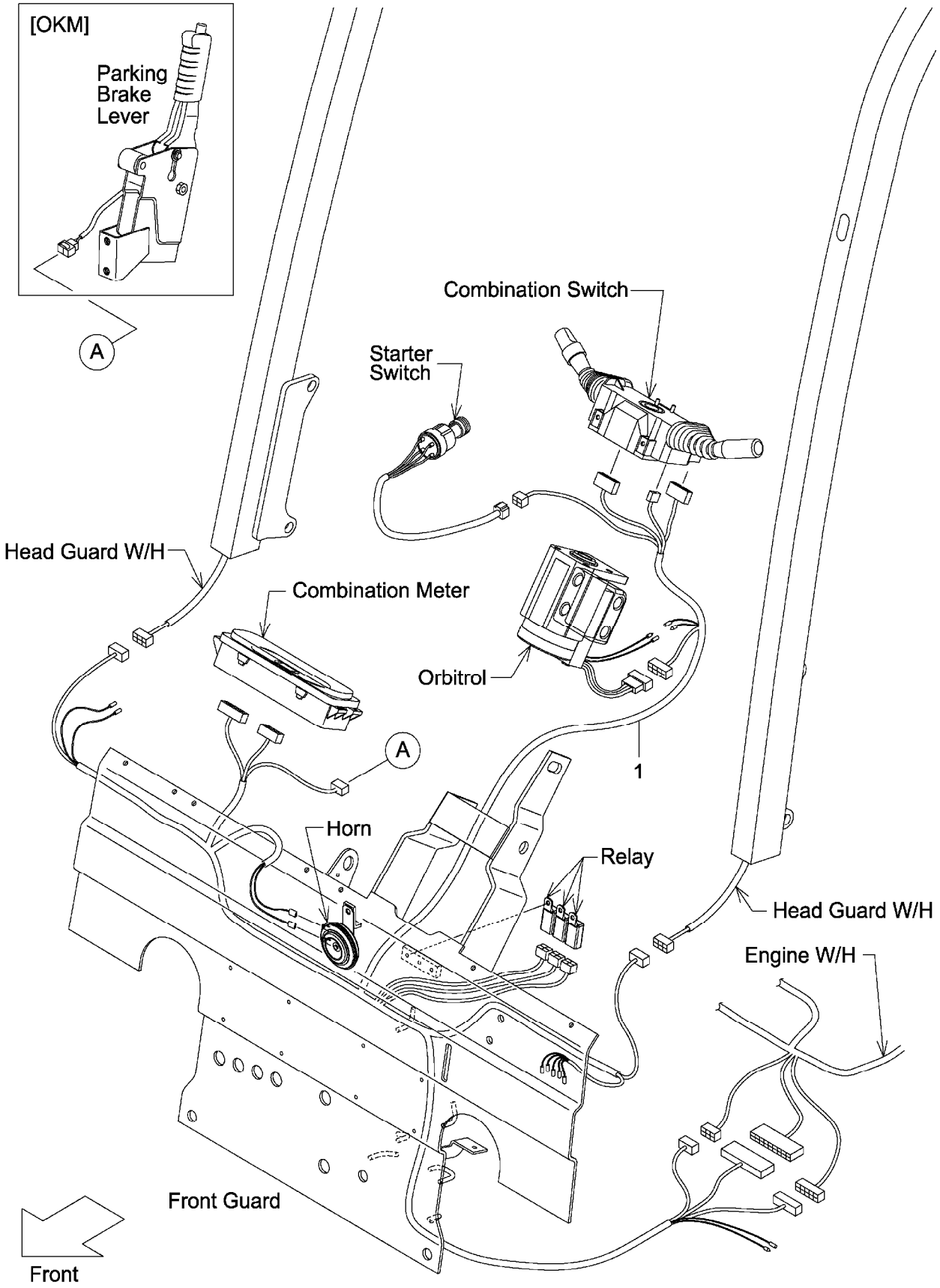

**FIG.28**

A:FG20T13 FG25T13 C:FD20T13 FD25T13
B:FG20T3 FG25T3 D:FD20T3 FD25T3

(F7022430)

| Item No | Part No. | Mark | Description | Req'd | Remarks : Serial No. |
|---|---|---|---|---|---|
| 1 | 22N52-42201 | | WIRE-HARNESS,F.GUARD ﾜｲﾔﾊｰﾈｽ | 1 | |
| - | 52N53-72101 | | WIRE-HARNESS,F.GUARD ﾜｲﾔﾊｰﾈｽ | 1 | [FC] |
| - | 52N52-32001 | | WIRE-HARNESS,F.GUARD ﾜｲﾔﾊｰﾈｽ | 1 | [LCR] |
| - | 52N53-82001 | | WIRE-HARNESS,F.GUARD ﾜｲﾔﾊｰﾈｽ | 1 | B,D<br>[EXN] |
| - | 52N53-72301 | | WIRE-HARNESS,F.GUARD ﾜｲﾔﾊｰﾈｽ | 1 | [FC/LCR] |
| - | 52N53-72401 | | WIRE-HARNESS,F.GUARD ﾜｲﾔﾊｰﾈｽ | 1 | B,D<br>[FC/EXN] |
| - | 52N52-32401 | | WIRE-HARNESS,F.GUARD ﾜｲﾔﾊｰﾈｽ | 1 | B,D<br>[LCR/EXN] |
| - | 52N52-32501 | | WIRE-HARNESS,F.GUARD ﾜｲﾔﾊｰﾈｽ | 1 | B,D<br>[FC/LCR/EXN] |

# FIG.29 COMBINATION SWITCH (CLUTCH)(OIL CLUTCH)

(F7022440) コンビネーションスイッチ

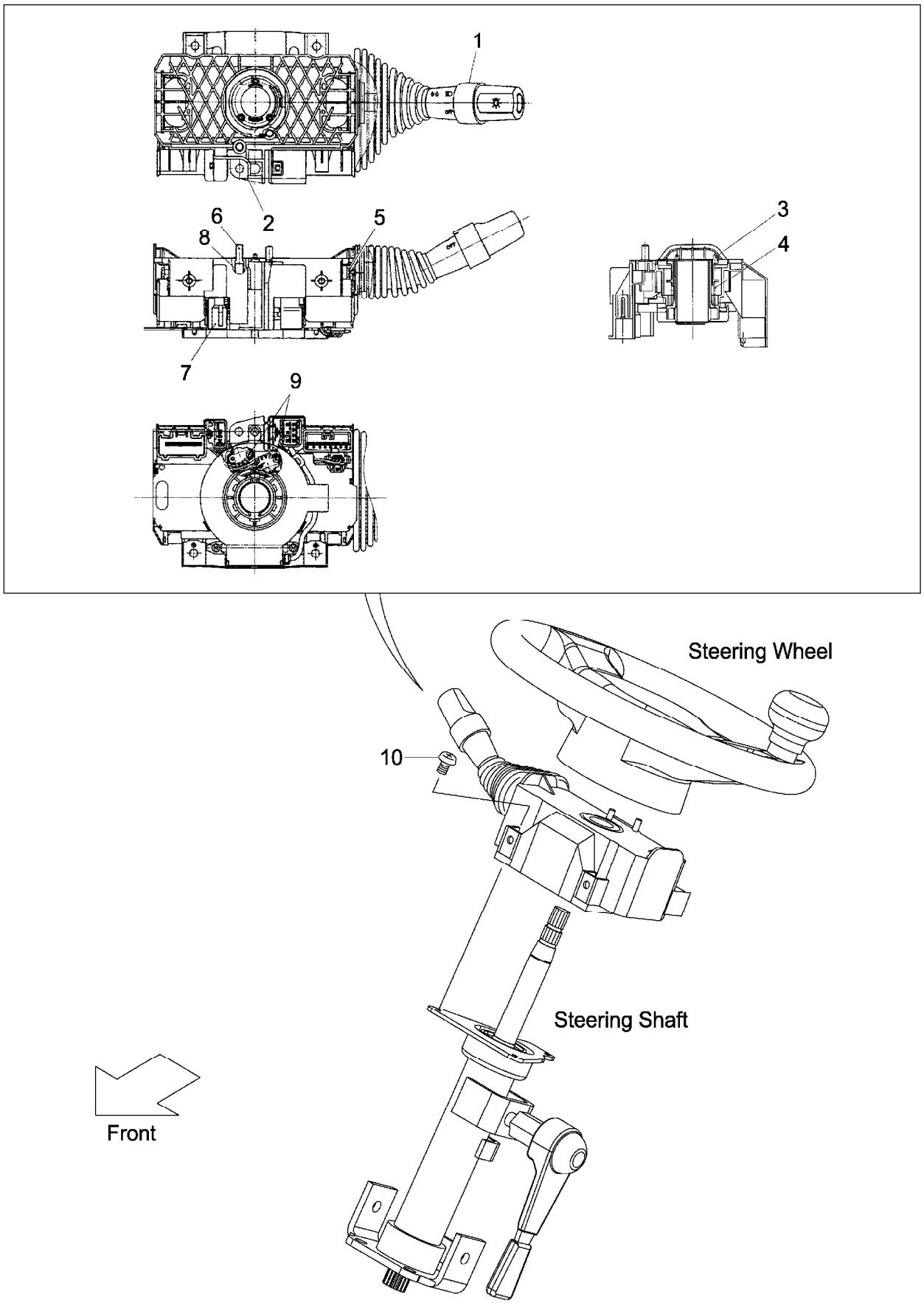

A:FG20C13 FG25C13 C:FD20C13 FD25C13
B:FG20C3 FG25C3 FG20W3 FG25W3 D:FD20C3 FD25C3 FD20W3 FD25W3

(F7022440)

| Item No | Part No. | Mark | Description | | Req'd | Remarks : Serial No. |
|---|---|---|---|---|---|---|
| A1 | 239A2-40501 | | SWITCH-ASSY,COMBINATION | コンビネーションスイッチアッセン | 1 | INC.1-9 |
| 1 | 280C2-42331 | | SWITCH,TURN-SIGNAL | スイッチ | 1 | |
| 2 | NO PART NO. | # | BODY | ボディ | 1 | |
| 3 | NO PART NO. | # | CAM,CANCEL,RH | カム | 1 | |
| 4 | NO PART NO. | # | SPRING | スプリング | 1 | |
| 5 | NO PART NO. | # | SCREW | スクリュ | 4 | |
| 6 | 280C2-42351 | | CONTACT,HORN | コンタクト | 2 | |
| 7 | NO PART NO. | # | CODE,CP-HORN | コード | 1 | |
| 8 | NO PART NO. | # | SPRING | スプリング | 2 | |
| 9 | NO PART NO. | # | SCREW | スクリュ | 2 | |
| 10 | 01033-05014 | | SCREW | スクリュ | 3 | |

# FIG.30 COMBINATION SWITCH (TOR-CON)

(F7022450) コンビネーションスイッチ

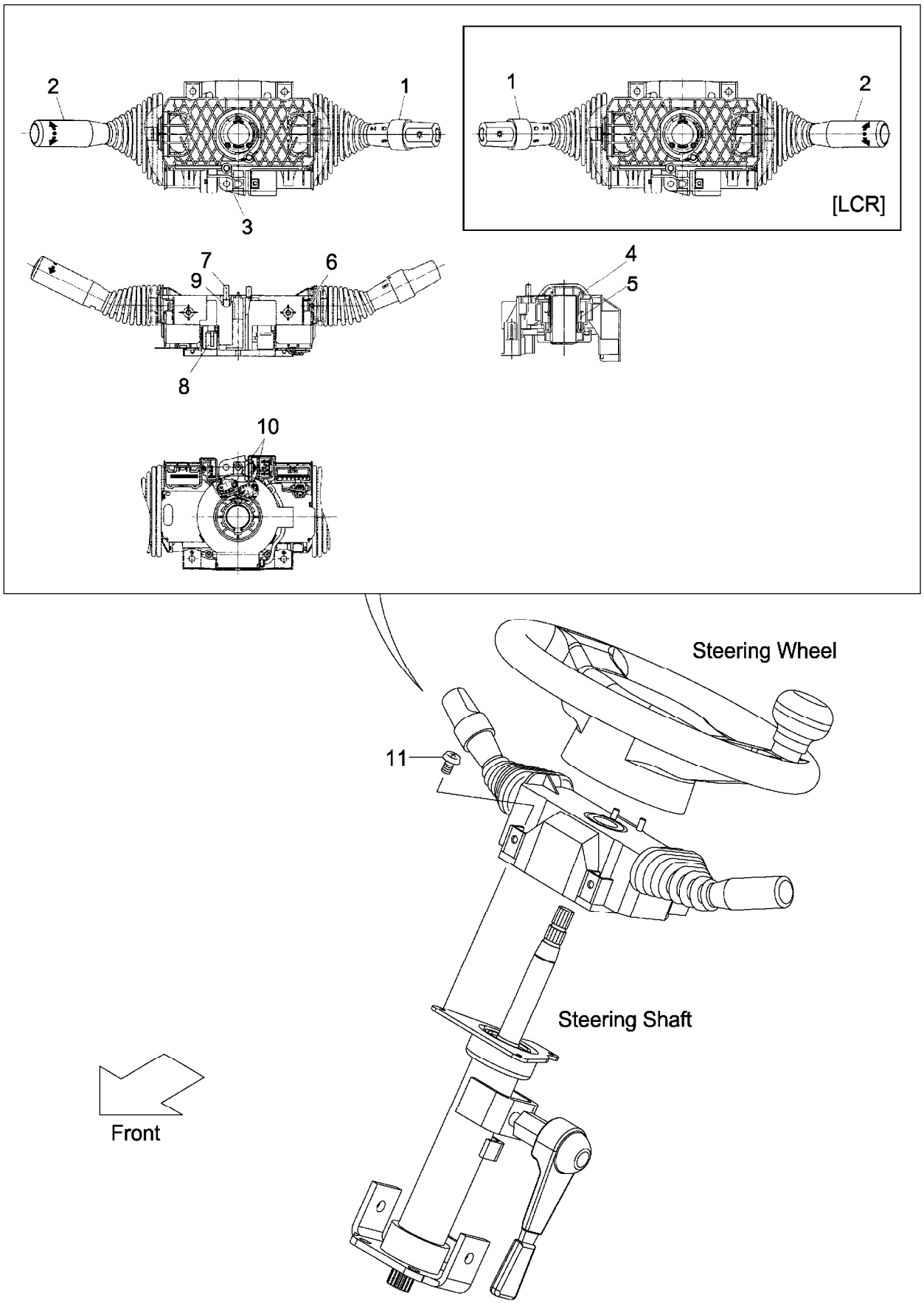

A:FG20T13 FG25T13 C:FD20T13 FD25T13
B:FG20T3 FG25T3 D:FD20T3 FD25T3

| Item No | Part No. | Mark | Description | Req'd | Remarks : Serial No. |
|---|---|---|---|---|---|
| A1 | 209K2-40501 | | SWITCH-ASSY,COMBINATION コンビネーションスイッチアッセン | 1 | INC.1-10 |
| - | 509K2-30101 | | SWITCH-ASSY,COMBINATION コンビネーションスイッチアッセン | 1 | [LCR] INC.1-10 |
| 1 | 280C2-42331 | | SWITCH,TURN-SIGNAL スイッチ | 1 | |
| - | 280C2-42301 | | SWITCH,TURN-SIGNAL スイッチ | 1 | [LCR] |
| 2 | 280C2-42341 | | SWITCH,DIRECTION スイッチ | 1 | |
| - | 280C2-42311 | | SWITCH,DIRECTION スイッチ | 1 | [LCR] |
| 3 | NO PART NO. | # | BODY ボディ | 1 | |
| 4 | NO PART NO. | # | CAM,CANCEL,RH カム | 1 | |
| - | NO PART NO. | # | CAM,CANCEL,RH カム | 1 | [LCR] |
| 5 | NO PART NO. | # | SPRING スプリング | 1 | |
| 6 | NO PART NO. | # | SCREW スクリュ | 4 | |
| 7 | 280C2-42351 | | CONTACT,HORN コンタクト | 2 | |
| 8 | NO PART NO. | # | CODE,CP-HORN コード | 1 | |
| 9 | NO PART NO. | # | SPRING スプリング | 2 | |
| 10 | NO PART NO. | # | SCREW スクリュ | 2 | |
| 11 | 01033-05014 | | SCREW スクリュ | 3 | |

# FIG.31 ELECTRIC PARTS (GASOLINE:CLUTCH & OIL CLUTCH)

(F7022460) エレクトリックパーツ

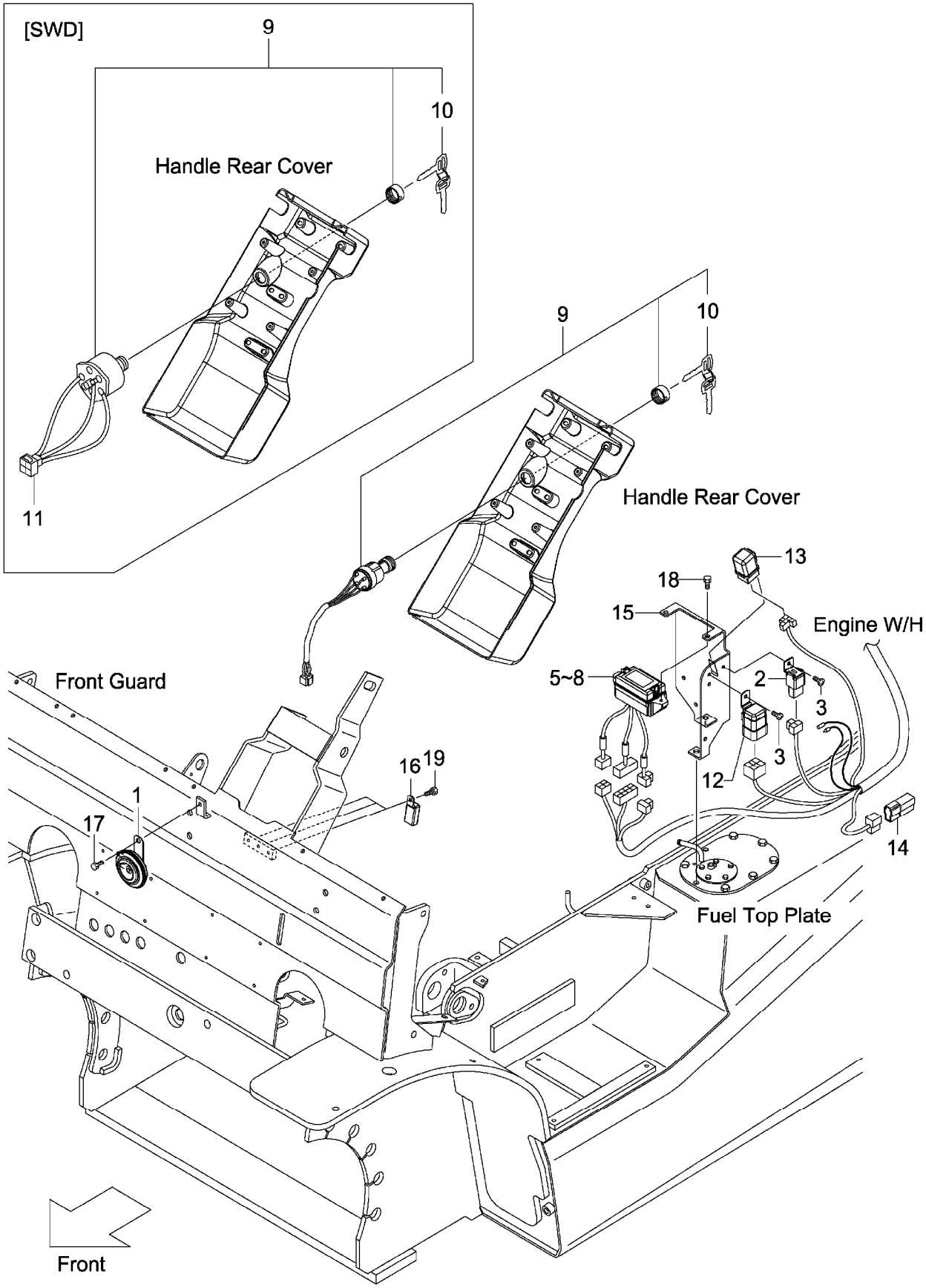

A:FG20C13 FG25C13
B:FG20C3 FG25C3 FG20W3 FG25W3

| Item No | Part No. | Mark | Description | | Req'd | Remarks : Serial No. |
|---|---|---|---|---|---|---|
| 1 | 216G2-43651 | | HORN | ﾎｰﾝ | 1 | |
| 2 | 216G2-43711 | | UNIT,FLASHER | ﾕﾆｯﾄ | 1 | |
| 3 | 214A2-42611 | | SCREW | ｽｸﾘｭ | 2 | |
| 4 | 04913-10200 | + | BAND | ﾊﾞﾝﾄﾞ | 4 | |
| 5 | 22N52-42101 | | BOX,FUSE | ﾎﾞｯｸｽ | 1 | INC.6-8 |
| 6 | 22N52-42311 | | FUSE,3A | ﾋｭｰｽﾞ | 5 | |
| 7 | 22N52-42321 | | FUSE,7.5A | ﾋｭｰｽﾞ | 5 | |
| 8 | 22N52-42331 | | FUSE,15A | ﾋｭｰｽﾞ | 3 | |
| 9 | 216G2-42311 | | SWITCH,STARTER | ｽｲｯﾁ | 1 | INC.10 |
| - | 24352-42521 | | SWITCH,STARTER | ｽｲｯﾁ | 1 | [SWD] INC.10 |
| 10 | 216G2-43401 | | KEY,SPARE,511323 | ｷｰ | 1 | (1SET=2PCS) |
| - | 216G2-43411 | | KEY,SPARE,512421 | ｷｰ | (1) | (1SET=2PCS) |
| - | 216G2-43421 | | KEY,SPARE,513454 | ｷｰ | (1) | (1SET=2PCS) |
| - | 93956-59279 | | KEY,SPARE,511323 | ｷｰ | 1 | [SWD](1SET=2PCS) |
| 11 | 534A7-72001 | | WIRE,LEAD | ﾜｲﾔ | 1 | [SWD] |
| 12 | 216G2-42321 | | RELAY,STARTER | ﾘﾚｰ | 1 | |
| 13 | 228F2-42131 | | RELAY,AUTO-CHOKE | ﾘﾚｰ | 1 | |
| 14 | 21152-42091 | | DIODE,MOLD-UNIT | ﾀﾞｲｵｰﾄﾞ | 1 | |
| 15 | 22N52-42021 | | BRACKET,ELECTRIC | ﾌﾞﾗｹｯﾄ | 1 | |
| 16 | 209K2-42351 | | RELAY,1A | ﾘﾚｰ | 3 | |
| 17 | 01185-08016 | | BOLT | ﾎﾞﾙﾄ | 1 | |
| 18 | 01185-06016 | | BOLT | ﾎﾞﾙﾄ | 2 | |
| 19 | 01183-06010 | | BOLT | ﾎﾞﾙﾄ | 3 | |

# FIG.32 ELECTRIC PARTS (GASOLINE:TOR-CON)

(F7022470) エレクトリックパーツ

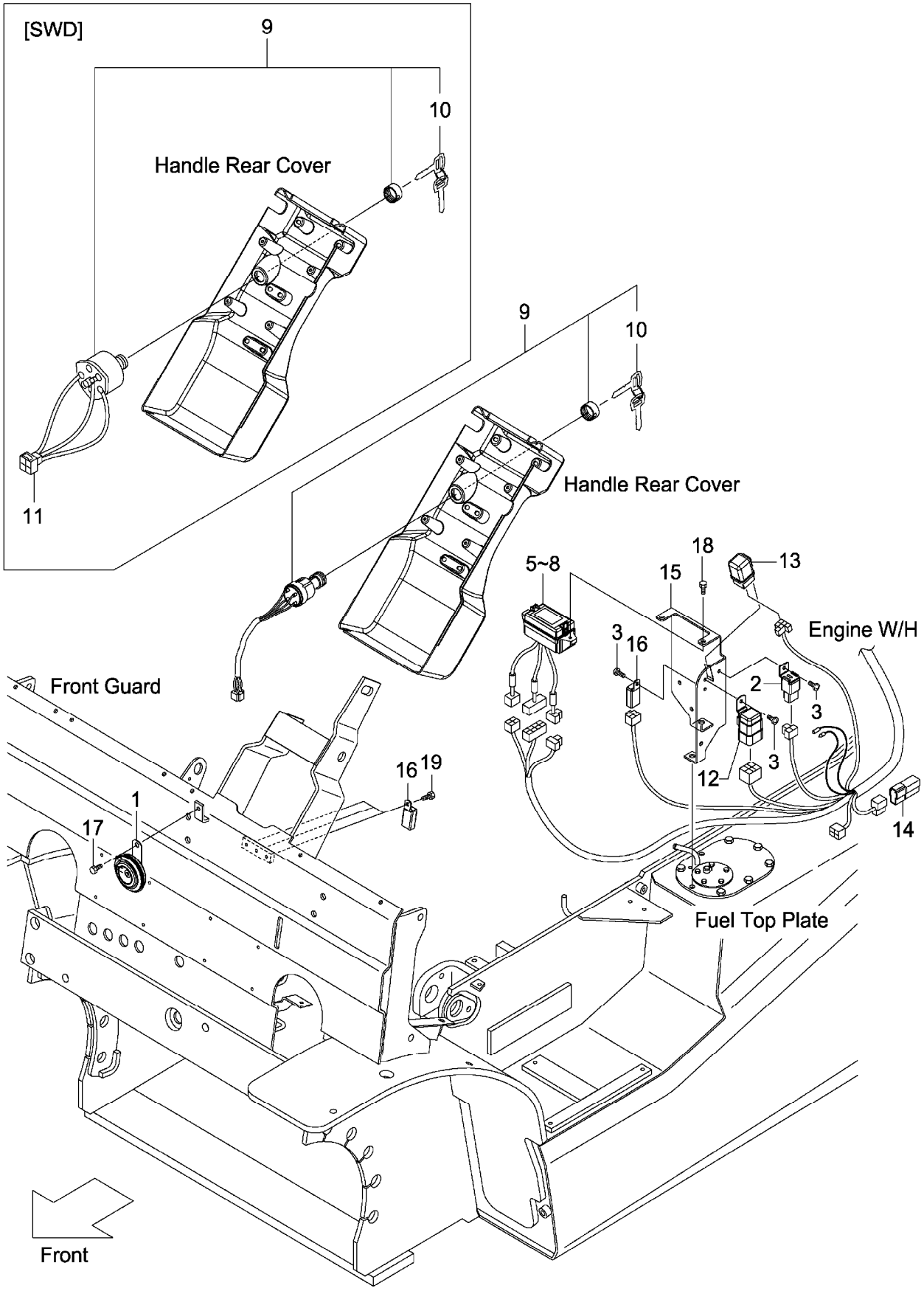

A:FG20T13 FG25T13
B:FG20T3 FG25T3

| Item No | Part No. | Mark | Description | | Req'd | Remarks : Serial No. |
|---|---|---|---|---|---|---|
| 1 | 216G2-43651 | | HORN | ﾎｰﾝ | 1 | |
| 2 | 216G2-43711 | | UNIT,FLASHER | ﾕﾆｯﾄ | 1 | |
| 3 | 214A2-42611 | | SCREW | ｽｸﾘｭ | 3 | |
| 4 | 04913-10200 | + | BAND | ﾊﾞﾝﾄﾞ | 4 | |
| 5 | 22N52-42101 | | BOX,FUSE | ﾎﾞｯｸｽ | 1 | INC.6-8 |
| 6 | 22N52-42311 | | FUSE,3A | ﾋｭｰｽﾞ | 5 | |
| 7 | 22N52-42321 | | FUSE,7.5A | ﾋｭｰｽﾞ | 5 | |
| 8 | 22N52-42331 | | FUSE,15A | ﾋｭｰｽﾞ | 3 | |
| 9 | 216G2-42311 | | SWITCH,STARTER | ｽｲｯﾁ | 1 | INC.10 |
| - | 24352-42521 | | SWITCH,STARTER | ｽｲｯﾁ | 1 | [SWD] INC.10 |
| 10 | 216G2-43401 | | KEY,SPARE,511323 | ｷｰ | 1 | (1SET=2PCS) |
| - | 216G2-43411 | | KEY,SPARE,512421 | ｷｰ | (1) | (1SET=2PCS) |
| - | 216G2-43421 | | KEY,SPARE,513454 | ｷｰ | (1) | (1SET=2PCS) |
| - | 93956-59279 | | KEY,SPARE,511323 | ｷｰ | 1 | [SWD](1SET=2PCS) |
| 11 | 534A7-72001 | | WIRE,LEAD | ﾜｲﾔ | 1 | [SWD] |
| 12 | 216G2-42321 | | RELAY,STARTER | ﾘﾚｰ | 1 | |
| 13 | 228F2-42131 | | RELAY,AUTO-CHOKE | ﾘﾚｰ | 1 | |
| 14 | 21152-42091 | | DIODE,MOLD-UNIT | ﾀﾞｲｵｰﾄﾞ | 1 | |
| 15 | 22N52-42021 | | BRACKET,ELECTRIC | ﾌﾞﾗｹｯﾄ | 1 | |
| 16 | 209K2-42351 | | RELAY,1A | ﾘﾚｰ | 4 | |
| 17 | 01185-08016 | | BOLT | ﾎﾞﾙﾄ | 1 | |
| 18 | 01185-06016 | | BOLT | ﾎﾞﾙﾄ | 2 | |
| 19 | 01183-06010 | | BOLT | ﾎﾞﾙﾄ | 3 | |

# FIG.33 ELECTRIC PARTS (DIESEL:CLUTCH & OIL CLUTCH)

(F7022480) エレクトリックパーツ

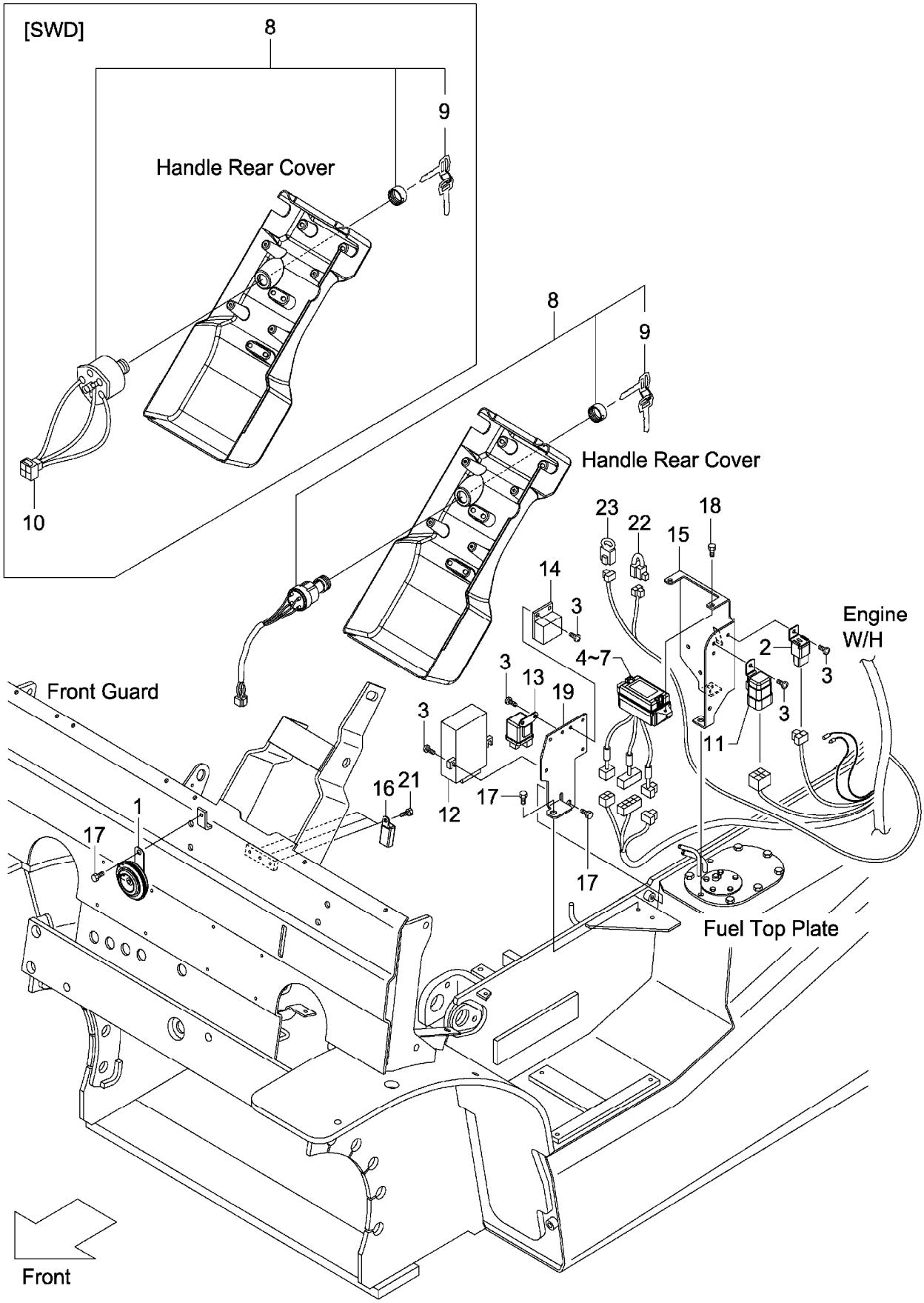

A:FD20C13 FD25C13
B:FD20C3 FD25C3 FD20W3 FD25W3

| Item No | Part No. | Mark | Description | | Req'd | Remarks : Serial No. |
|---|---|---|---|---|---|---|
| 1 | 216G2-43651 | | HORN | ﾎｰﾝ | 1 | |
| 2 | 216G2-43711 | | UNIT,FLASHER | ﾕﾆｯﾄ | 1 | |
| 3 | 214A2-42611 | | SCREW | ｽｸﾘｭ | 8 | |
| 4 | 22N52-42101 | | BOX,FUSE | ﾎﾞｯｸｽ | 1 | INC.5-7 |
| 5 | 22N52-42311 | | FUSE,3A | ﾋｭｰｽﾞ | 5 | |
| 6 | 22N52-42321 | | FUSE,7.5A | ﾋｭｰｽﾞ | 5 | |
| 7 | 22N52-42331 | | FUSE,15A | ﾋｭｰｽﾞ | 3 | |
| 8 | 216G2-42311 | | SWITCH,STARTER | ｽｲｯﾁ | 1 | INC.9 |
| - | 24352-42521 | | SWITCH,STARTER | ｽｲｯﾁ | 1 | [SWD] INC.9 |
| 9 | 216G2-43401 | | KEY,SPARE,511323 | ｷｰ | 1 | (1SET=2PCS) |
| - | 216G2-43411 | | KEY,SPARE,512421 | ｷｰ | (1) | (1SET=2PCS) |
| - | 216G2-43421 | | KEY,SPARE,513454 | ｷｰ | (1) | (1SET=2PCS) |
| - | 93956-59279 | | KEY,SPARE,511323 | ｷｰ | 1 | [SWD](1SET=2PCS) |
| 10 | 534A7-72001 | | WIRE,LEAD | ﾜｲﾔ | 1 | [SWD] |
| 11 | 216G2-42321 | | RELAY,STARTER | ﾘﾚｰ | 1 | |
| 12 | 242F2-42301 | | TIMER,QGS-CONTROLLER | ﾀｲﾏ | 1 | |
| 13 | 242F2-42311 | | RELAY,GLOW-PLUG | ﾘﾚｰ | 1 | |
| 14 | 242F2-42321 | | DETECTOR | ﾃﾞｨﾃｸﾀ | 1 | |
| 15 | 22N52-42021 | | BRACKET,ELECTRIC | ﾌﾞﾗｹｯﾄ | 1 | |
| 16 | 209K2-42351 | | RELAY,1A | ﾘﾚｰ | 3 | |
| 17 | 01185-08016 | | BOLT | ﾎﾞﾙﾄ | 3 | |
| 18 | 01185-06016 | | BOLT | ﾎﾞﾙﾄ | 2 | |
| 19 | 22N52-42031 | | BRACKET,ELECTRIC | ﾌﾞﾗｹｯﾄ | 1 | |
| 20 | 04913-10200 | + | BAND | ﾊﾞﾝﾄﾞ | 4 | |
| 21 | 01183-06010 | | BOLT | ﾎﾞﾙﾄ | 3 | |
| 22 | 26062-42881 | | RESISTOR | ﾚｼﾞｽﾀ | 1 | A:1-110 |
| | | | | | | B:1-180 |
| - | 22N52-42951 | | RESISTOR | ﾚｼﾞｽﾀ | 1 | A:111-114 |
| | | | | | | B:181-321 |
| - | 22N52-43001 | | RESISTOR | ﾚｼﾞｽﾀ | 1 | A:115- |
| | | | | | | B:322- |
| 23 | 21152-42091 | | DIODE | ﾀﾞｲｵｰﾄﾞ | 1 | A:111- |
| | | | | | | B:181- |

# FIG.34 ELECTRIC PARTS (DIESEL:TOR-CON)

(F7022490) エレクトリックパーツ

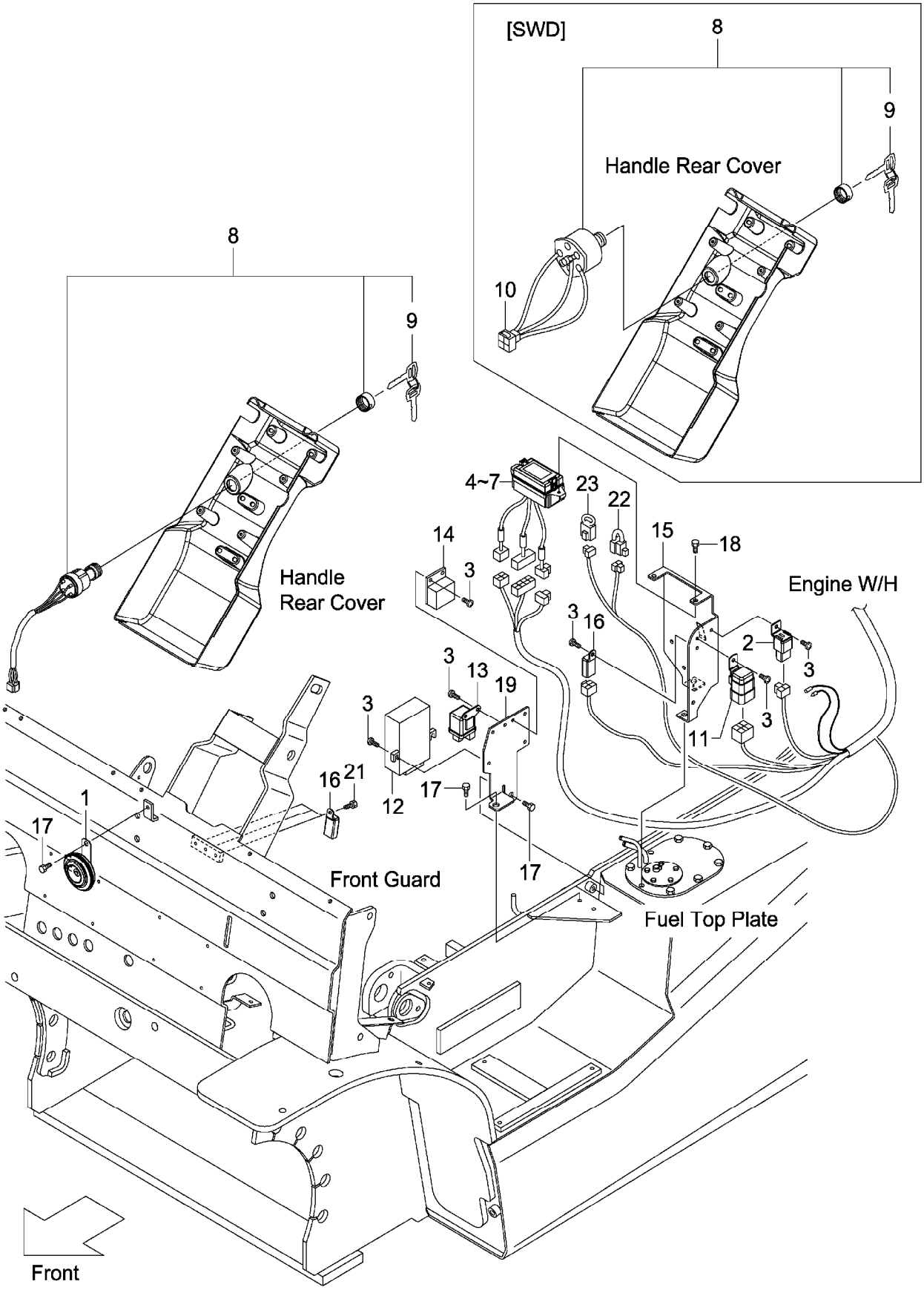

A:FD20T13 FD25T13
B:FD20T3 FD25T3

| Item No | Part No. | Mark | Description | | Req'd | Remarks : Serial No. |
|---|---|---|---|---|---|---|
| 1 | 216G2-43651 | | HORN | ﾎｰﾝ | 1 | |
| 2 | 216G2-43711 | | UNIT,FLASHER | ﾕﾆｯﾄ | 1 | |
| 3 | 214A2-42611 | | SCREW | ｽｸﾘｭ | 9 | |
| 4 | 22N52-42101 | | BOX,FUSE | ﾎﾞｯｸｽ | 1 | INC.5-7 |
| 5 | 22N52-42311 | | FUSE,3A | ﾋｭｰｽﾞ | 5 | |
| 6 | 22N52-42321 | | FUSE,7.5A | ﾋｭｰｽﾞ | 5 | |
| 7 | 22N52-42331 | | FUSE,15A | ﾋｭｰｽﾞ | 3 | |
| 8 | 216G2-42311 | | SWITCH,STARTER | ｽｲｯﾁ | 1 | INC.9 |
| - | 24352-42521 | | SWITCH,STARTER | ｽｲｯﾁ | 1 | [SWD] INC.9 |
| 9 | 216G2-43401 | | KEY,SPARE,511323 | ｷｰ | 1 | (1SET=2PCS) |
| - | 216G2-43411 | | KEY,SPARE,512421 | ｷｰ | (1) | (1SET=2PCS) |
| - | 216G2-43421 | | KEY,SPARE,513454 | ｷｰ | (1) | (1SET=2PCS) |
| - | 93956-59279 | | KEY,SPARE,511323 | ｷｰ | 1 | [SWD](1SET=2PCS) |
| 10 | 534A7-72001 | | WIRE,LEAD | ﾜｲﾔ | 1 | [SWD] |
| 11 | 216G2-42321 | | RELAY,STARTER | ﾘﾚｰ | 1 | |
| 12 | 242F2-42301 | | TIMER,QGS-CONTROLLER | ﾀｲﾏ | 1 | |
| 13 | 242F2-42311 | | RELAY,GLOW-PLUG | ﾘﾚｰ | 1 | |
| 14 | 242F2-42321 | | DETECTOR | ﾃﾞｨﾃｸﾀ | 1 | |
| 15 | 22N52-42021 | | BRACKET,ELECTRIC | ﾌﾞﾗｹｯﾄ | 1 | |
| 16 | 209K2-42351 | | RELAY,1A | ﾘﾚｰ | 4 | |
| 17 | 01185-08016 | | BOLT | ﾎﾞﾙﾄ | 3 | |
| 18 | 01185-06016 | | BOLT | ﾎﾞﾙﾄ | 2 | |
| 19 | 22N52-42031 | | BRACKET,ELECTRIC | ﾌﾞﾗｹｯﾄ | 1 | |
| 20 | 04913-10200 | + | BAND | ﾊﾞﾝﾄﾞ | 4 | |
| 21 | 01183-06010 | | BOLT | ﾎﾞﾙﾄ | 3 | |
| 22 | 26062-42881 | | RESISTOR | ﾚｼﾞｽﾀ | 1 | A:1-110 |
| | | | | | | B:1-180 |
| - | 22N52-42951 | | RESISTOR | ﾚｼﾞｽﾀ | 1 | A:111-114 |
| | | | | | | B:181-321 |
| - | 22N52-43001 | | RESISTOR | ﾚｼﾞｽﾀ | 1 | A:115- |
| | | | | | | B:322- |
| 23 | 21152-42091 | | DIODE | ﾀﾞｲｵｰﾄﾞ | 1 | A:111- |
| | | | | | | B:181- |

# ENGINE WIRE HARNESS
# FIG.35 (GASOLINE:CLUTCH & OIL CLUTCH)

(F70224A0) エンジンワイヤハーネス

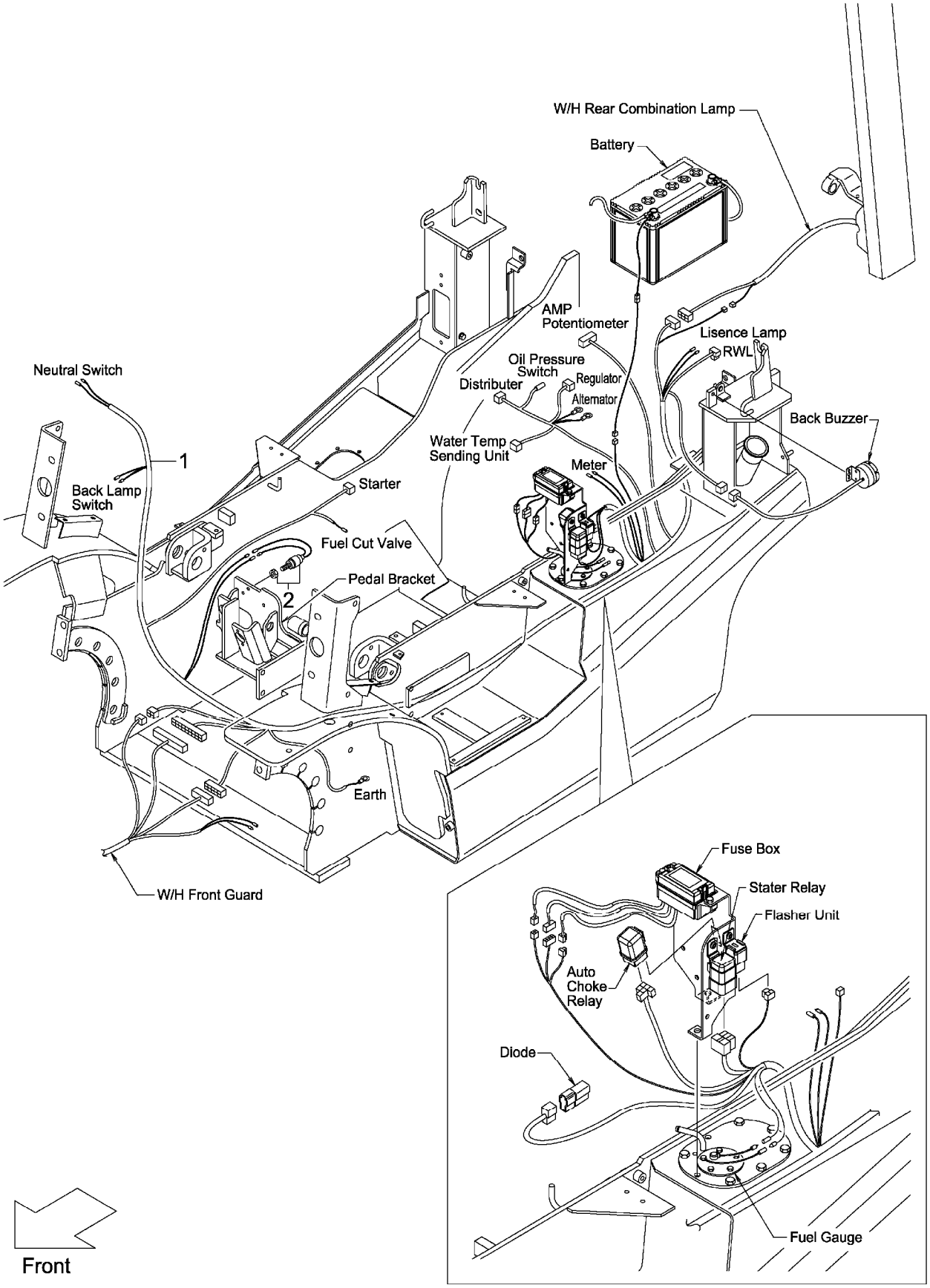

**FIG.35**

(F70224A0)

A:FG20C13 FG25C13
B:FG20C3 FG25C3 FG20W3 FG25W3

| Item No | Part No. | Mark | Description | Req'd | Remarks : Serial No. |
|---|---|---|---|---|---|
| 1 | 22B42-42212 | | WIRE-HARNESS,ENGINE ﾜｲﾔﾊｰﾈｽ | 1 | |
| - | 52B43-72001 | | WIRE-HARNESS,ENGINE ﾜｲﾔﾊｰﾈｽ | 1 | [FC] |
| 2 | 23232-42072 | | SWITCH,STOP-LAMP ｽｲｯﾁ | 1 | |

# FIG.36 ENGINE WIRE HARNESS (GASOLINE:TOR-CON)

(F70224B0) エンジンワイヤハーネス

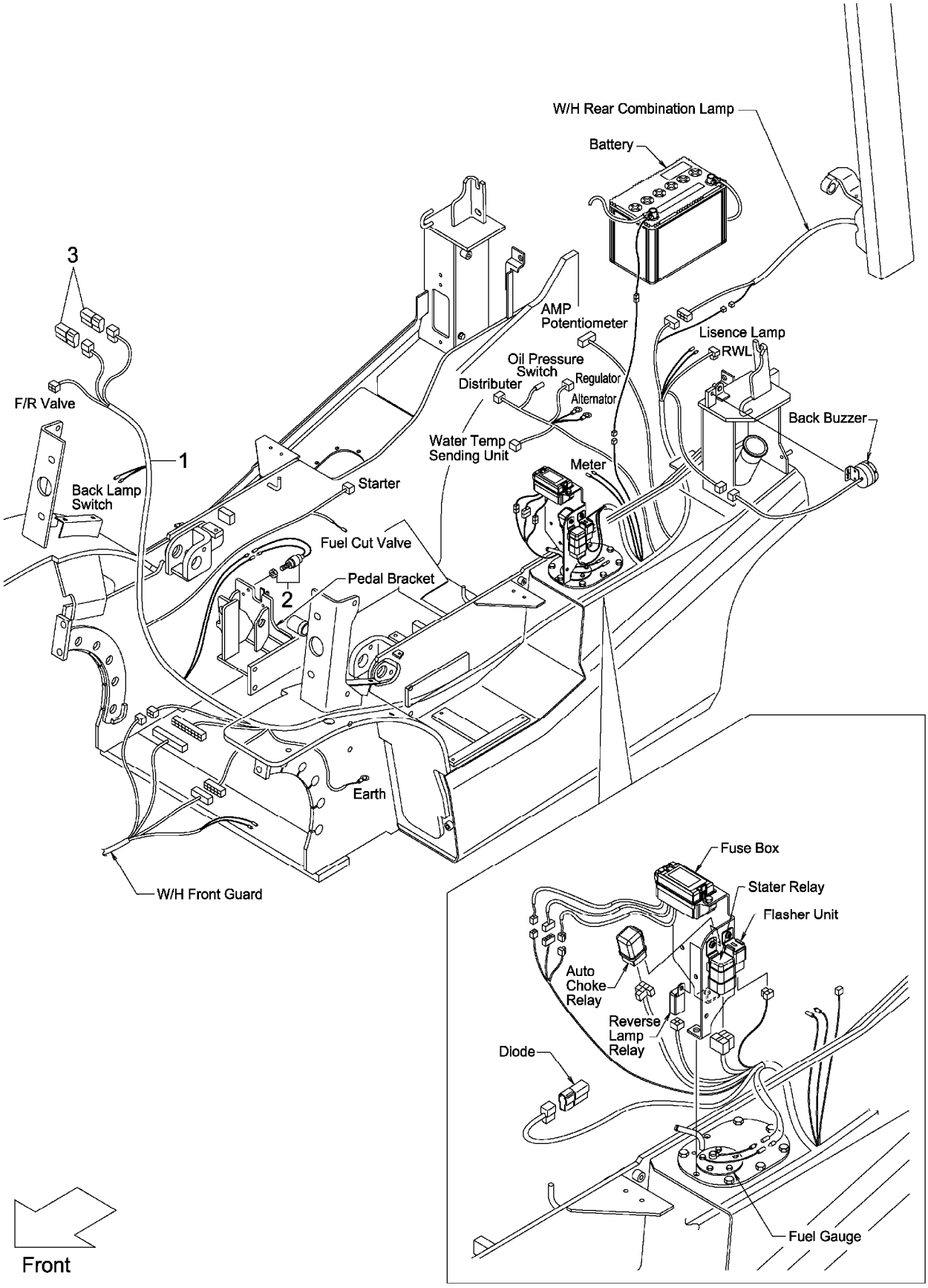

**FIG.36**

A:FG20T13 FG25T13
B:FG20T3 FG25T3

(F70224B0)

| Item No | Part No. | Mark | Description | Req'd | Remarks : Serial No. |
|---|---|---|---|---|---|
| 1 | 22B52-42212 | | WIRE-HARNESS,ENGINE ﾜｲﾔﾊｰﾈｽ | 1 | |
| - | 52B53-72001 | | WIRE-HARNESS,ENGINE ﾜｲﾔﾊｰﾈｽ | 1 | [FC] |
| 2 | 23232-42072 | | SWITCH,STOP-LAMP ｽｲｯﾁ | 1 | |
| 3 | 230C2-42201 | | DIODE,3A ﾀﾞｲｵｰﾄﾞ | 2 | |

# ENGINE WIRE HARNESS
# FIG.37 (DIESEL:CLUTCH & OIL CLUTCH)

(F70224C0) エンジンワイヤハーネス

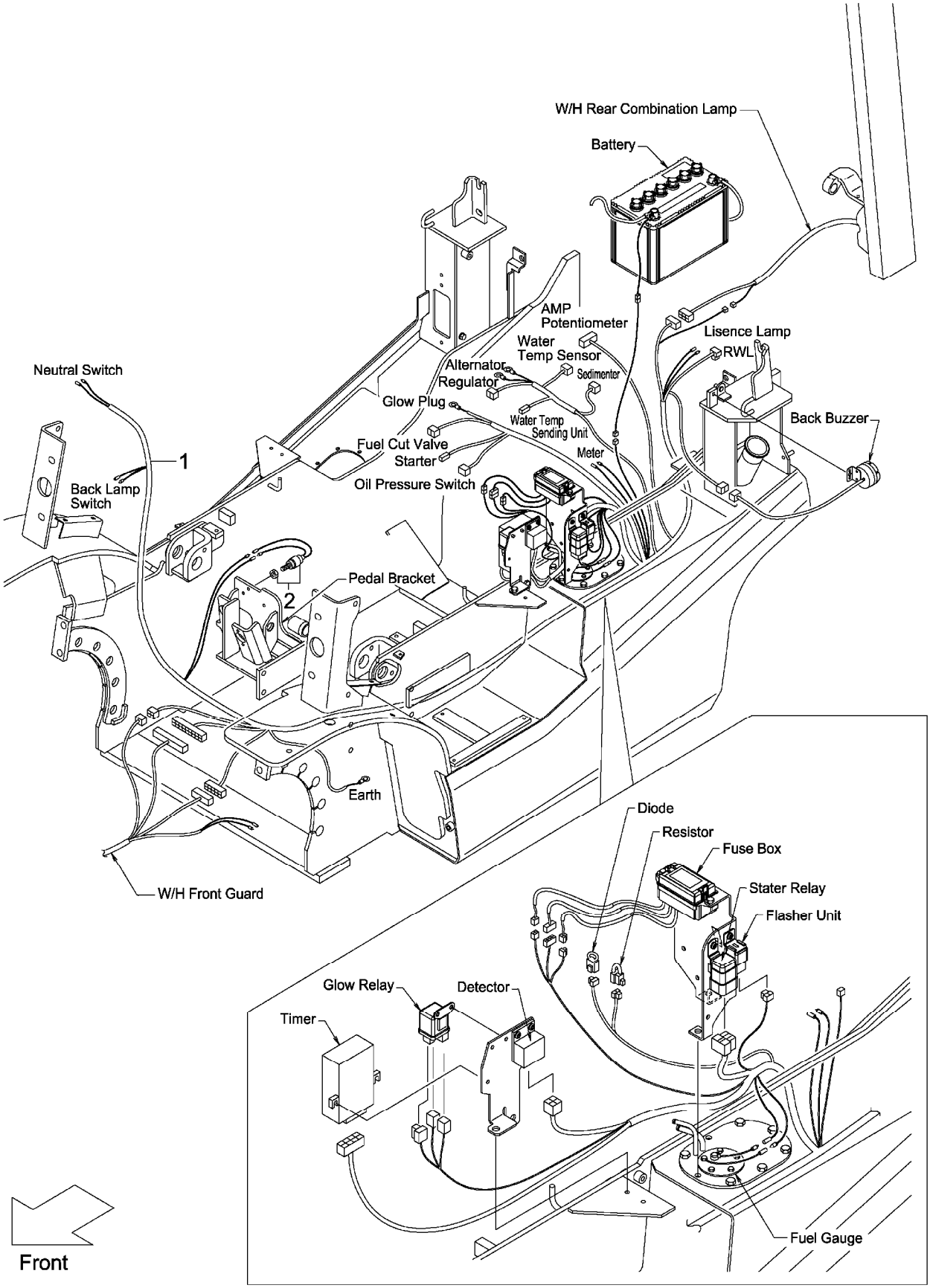

**FIG.37**

(F70224C0)

A:FD20C13 FD25C13
B:FD20C3 FD25C3 FD20W3 FD25W3

| Item No | Part No. | Mark | Description | Req'd | Remarks : Serial No. |
|---|---|---|---|---|---|
| 1 | 22N42-42212 | | WIRE-HARNESS,ENGINE ﾜｲﾔﾊｰﾈｽ | 1 | |
| - | 52N43-72001 | | WIRE-HARNESS,ENGINE ﾜｲﾔﾊｰﾈｽ | 1 | [FC] |
| 2 | 23232-42072 | | SWITCH,STOP-LAMP ｽｲｯﾁ | 1 | |

# FIG.38 ENGINE WIRE HARNESS (DIESEL:TOR-CON)

(F70224D0) エンジンワイヤハーネス

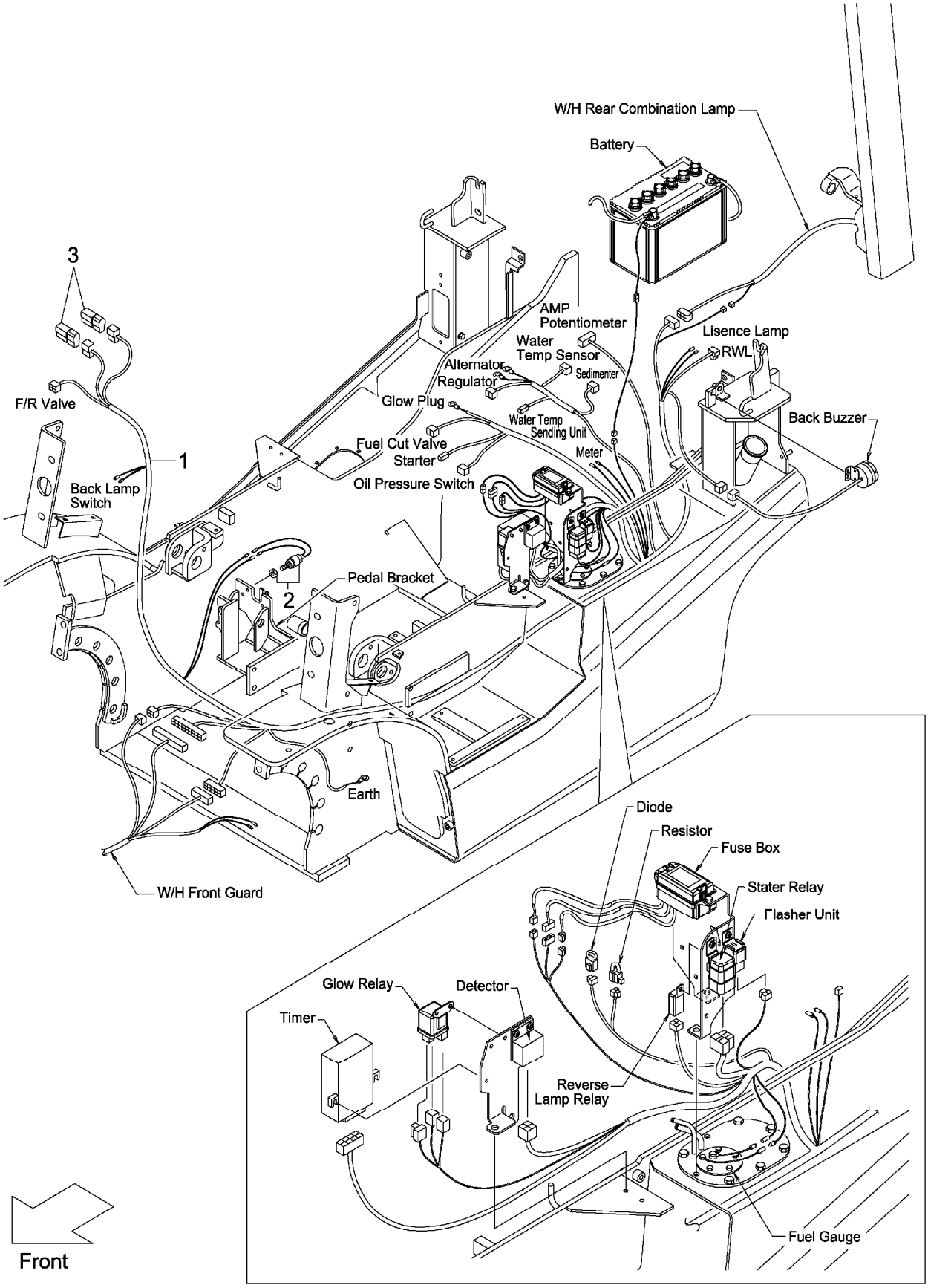

**FIG.38**

A:FD20T13 FD25T13
B:FD20T3 FD25T3

(F70224D0)

| Item No | Part No. | Mark | Description | Req'd | Remarks : Serial No. |
|---|---|---|---|---|---|
| 1 | 22N52-42212 | | WIRE-HARNESS,ENGINE ﾜｲﾔﾊｰﾈｽ | 1 | |
| - | 52N53-72001 | | WIRE-HARNESS,ENGINE ﾜｲﾔﾊｰﾈｽ | 1 | [FC] |
| 2 | 23232-42072 | | SWITCH,STOP-LAMP ｽｲｯﾁ | 1 | |
| 3 | 230C2-42201 | | DIODE,3A ﾀﾞｲｵｰﾄﾞ | 2 | |

# FIG.39 BATTERY (GASOLINE)

(F70224E0) ﾊﾞｯﾃﾘ

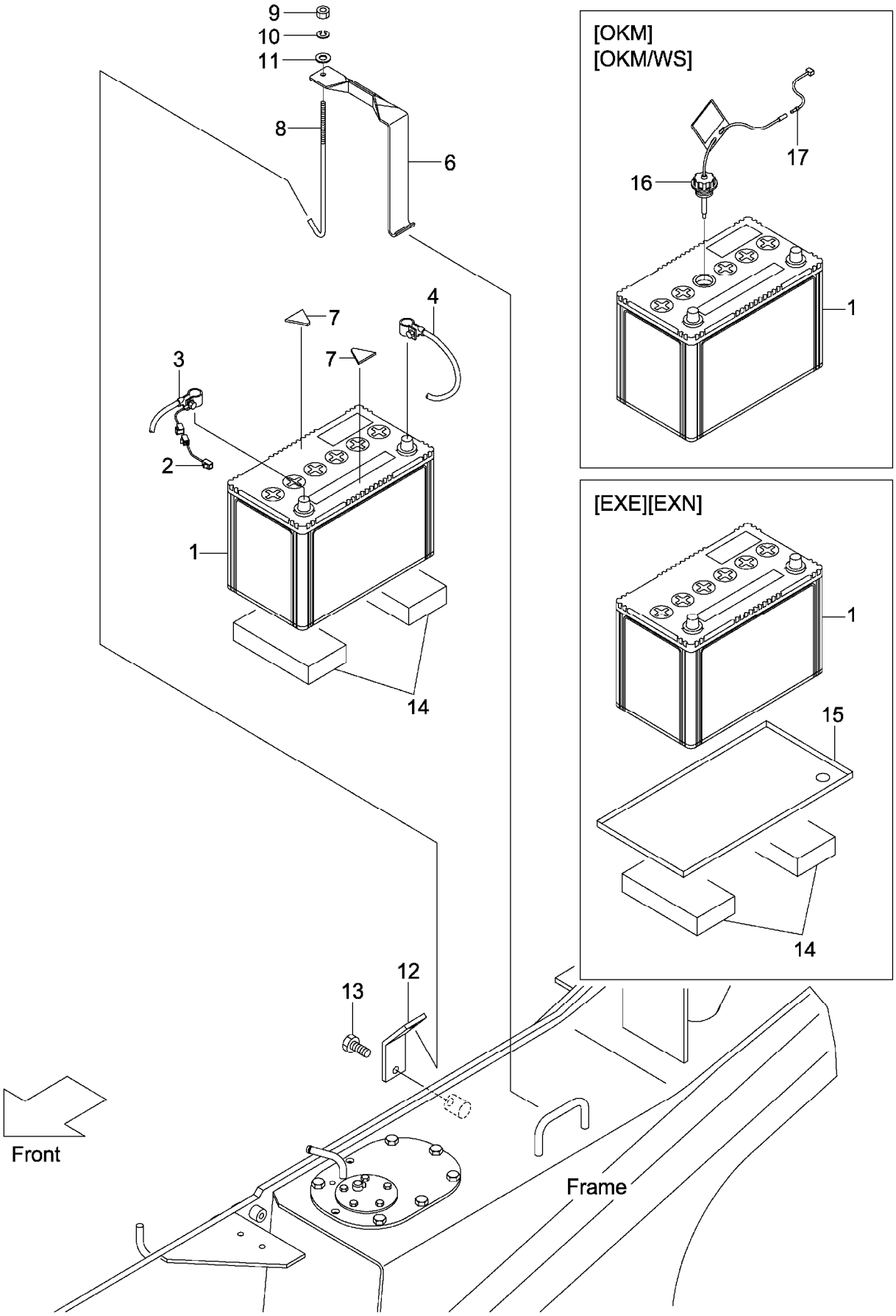

A:FG20C13 FG25C13 D:FG20T3 FG25T3
B:FG20T13 FG25T13 E:FG20W3 FG25W3
C:FG20C3 FG25C3

**FIG.39**
(F70224E0)

| Item No | Part No. | Mark | Description | | Req'd | Remarks : Serial No. |
|---|---|---|---|---|---|---|
| 1 | 225R2-42001 | | BATTERY,WET,55B24R | ﾊﾞｯﾃﾘ | 1 | |
| - | 217G2-42051 | | BATTERY,WET,65D23R | ﾊﾞｯﾃﾘ | 1 | [WS] |
| 2 | 25592-42081 | | WIRE,FUSIBLE-LINK | ﾜｲﾔ | 1 | |
| 3 | 22B52-42221 | | CABLE,BATTERY(+) | ｹｰﾌﾞﾙ | 1 | |
| - | 22S52-42221 | | CABLE,BATTERY(+) | ｹｰﾌﾞﾙ | 1 | [WS] |
| 4 | 212T2-42311 | | CABLE,BATTERY(-) | ｹｰﾌﾞﾙ | 1 | |
| - | 54612-72281 | | CABLE,BATTERY(-) | ｹｰﾌﾞﾙ | 1 | [WS] |
| - | 536G3-82201 | | CABLE,BATTERY(-) | ｹｰﾌﾞﾙ | 1 | D [EXE][EXN] |
| 5 | 516G3-82521 | + | TERMINAL,BATTERY | ﾀｰﾐﾅﾙ | 1 | D [EXE][EXN] |
| 6 | 216G2-42071 | | HOLDER,BATTERY | ﾎﾙﾀﾞ | 1 | |
| - | 217G2-42021 | | HOLDER,BATTERY | ﾎﾙﾀﾞ | 1 | [WS] |
| 7 | 216G2-43111 | | RUBBER | ﾗﾊﾞｰ | 2 | |
| 8 | 256C2-42231 | | BOLT,ANCHOR | ﾎﾞﾙﾄ | 1 | |
| 9 | 01420-00006 | | NUT | ﾅｯﾄ | 1 | (-2005.7.4) |
| - | 01400-00006 | | NUT | ﾅｯﾄ | 1 | (2005.7.5-) |
| 10 | 02010-00006 | | WASHER | ﾜｯｼｬ | 1 | |
| 11 | 23452-42181 | | WASHER | ﾜｯｼｬ | 1 | (-2005.7.4) |
| - | 02000-00006 | | WASHER | ﾜｯｼｬ | 1 | (2005.7.5-) |
| 12 | 22B52-42111 | | HOOK,ANCHOR-BOLT | ﾌｯｸ | 1 | |
| - | 22N52-42111 | | HOOK,ANCHOR-BOLT | ﾌｯｸ | 1 | [WS] |
| 13 | 01185-08016 | | BOLT | ﾎﾞﾙﾄ | 1 | |
| 14 | 22N52-42301 | | RUBBER | ﾗﾊﾞｰ | 2 | |
| 15 | 518G2-72121 | | CASE,BATTERY | ｹｰｽ | 1 | D [EXE][EXN] |
| 16 | 522A7-12211 | | CAP,BATTERY | ｷｬｯﾌﾟ | 1 | [OKM] |
| - | 521A2-42001 | | CAP,BATTERY | ｷｬｯﾌﾟ | 1 | [OKM/WS] |
| 17 | 539A6-22021 | | WIRE,LEAD | ﾜｲﾔ | 1 | [OKM][OKM/WS] |

# FIG.40 BATTERY (DIESEL)

(F70224F0) ﾊﾞｯﾃﾘ

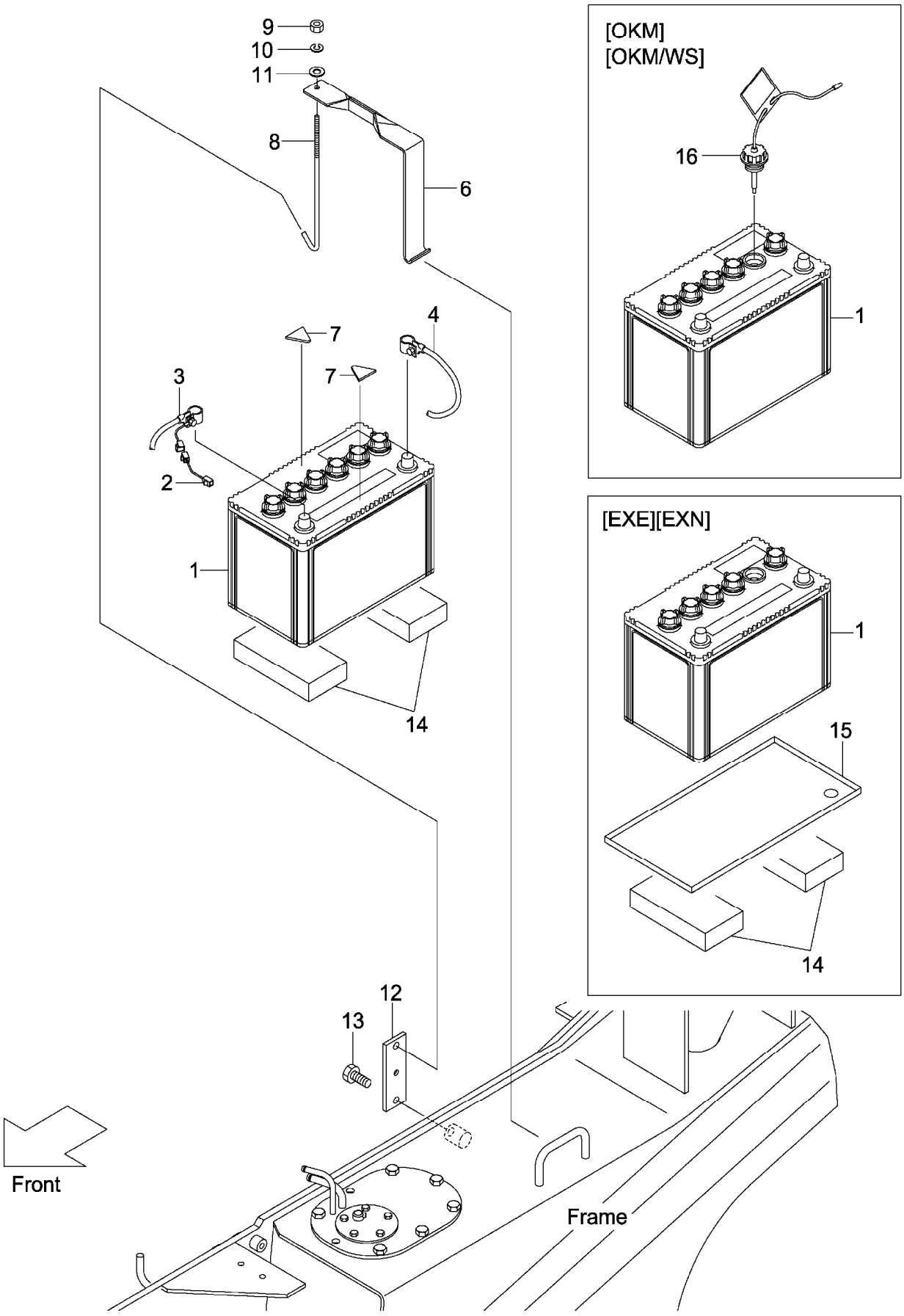

A:FD20C13 FD25C13 D:FD20T3 FD25T3
B:FD20T13 FD25T13 E:FD20W3 FD25W3
C:FD20C3 FD25C3

**FIG.40**
(F70224F0)

| Item No | Part No. | Mark | Description | | Req'd | Remarks : Serial No. |
|---|---|---|---|---|---|---|
| 1 | 230C2-42301 | | BATTERY,WET,95D31R | ﾊﾞｯﾃﾘ | 1 | |
| - | 534A7-02001 | | BATTERY,WET,115D31R | ﾊﾞｯﾃﾘ | 1 | [WS] |
| 2 | 25592-42081 | | WIRE,FUSIBLE-LINK | ﾜｲﾔ | 1 | |
| 3 | 242F2-42151 | | CABLE,BATTERY(+) | ｹｰﾌﾞﾙ | 1 | A,B:1-110<br>C,D,E:1-180 |
| - | 22N52-42221 | | CABLE,BATTERY(+) | ｹｰﾌﾞﾙ | 1 | A,B:111-157<br>C,D,E:181-963 |
| - | 242F2-42151 | | CABLE,BATTERY(+) | ｹｰﾌﾞﾙ | 1 | A,B:158-<br>C,D,E:964- |
| 4 | 238A2-42151 | | CABLE,BATTERY(-) | ｹｰﾌﾞﾙ | 1 | |
| - | 538G3-82201 | | CABLE,BATTERY(-) | ｹｰﾌﾞﾙ | 1 | D<br>[EXE][EXN] |
| 5 | 530C3-82361 | + | TERMINAL,BATTERY | ﾀｰﾐﾅﾙ | 1 | D<br>[EXE][EXN] |
| 6 | 217G2-42021 | | HOLDER,BATTERY | ﾎﾙﾀﾞ | 1 | |
| 7 | 216G2-43111 | | RUBBER | ﾗﾊﾞｰ | 2 | |
| 8 | 256C2-42231 | | BOLT,ANCHOR | ﾎﾞﾙﾄ | 1 | |
| 9 | 01420-00006 | | NUT | ﾅｯﾄ | 1 | (-2005.7.4) |
| - | 01400-00006 | | NUT | ﾅｯﾄ | 1 | (2005.7.5-) |
| 10 | 02010-00006 | | WASHER | ﾜｯｼｬ | 1 | |
| 11 | 23452-42181 | | WASHER | ﾜｯｼｬ | 1 | (-2005.7.4) |
| - | 02000-00006 | | WASHER | ﾜｯｼｬ | 1 | (2005.7.5-) |
| 12 | 22N52-42111 | | HOOK,ANCHOR-BOLT | ﾌｯｸ | 1 | |
| 13 | 01185-08016 | | BOLT | ﾎﾞﾙﾄ | 1 | |
| 14 | 22N52-42301 | | RUBBER | ﾗﾊﾞｰ | 2 | |
| 15 | 539A2-72121 | | CASE,BATTERY | ｹｰｽ | 1 | D<br>[EXE][EXN] |
| 16 | 522A2-42001 | | CAP,BATTERY | ｷｬｯﾌﾟ | 1 | [OKM][OKM/WS] |

# FIG.41 HEAD LAMP & FRONT COMBINATION LAMP

(F70224G0) ﾍｯﾄﾞﾗﾝﾌﾟ&ﾌﾛﾝﾄｺﾝﾋﾞﾈｰｼｮﾝﾗﾝﾌﾟ

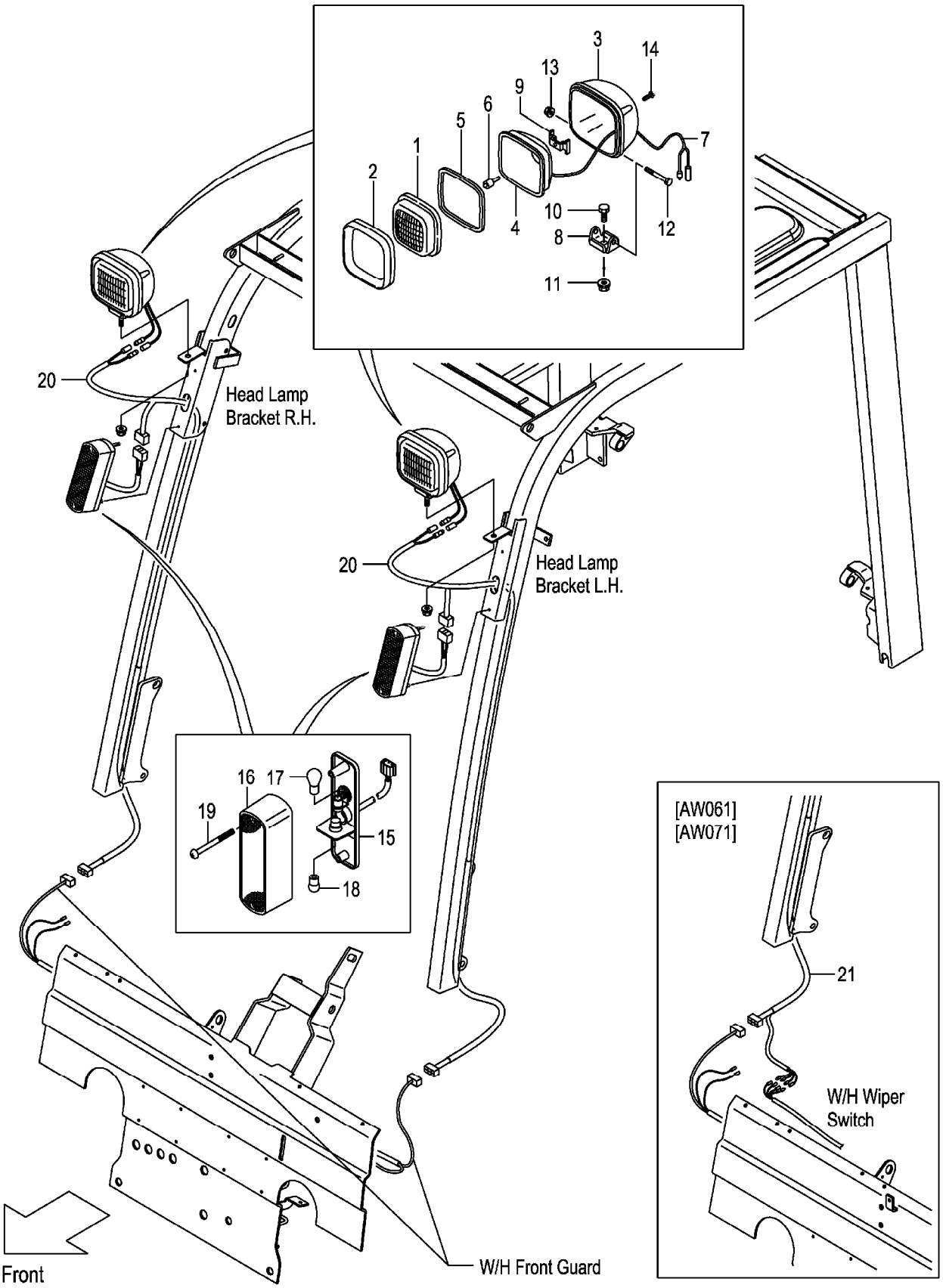

A:FG20C13 FG20T13 FG25C13 FG25T13 C:FD20C13 FD20T13 FD25C13 FD25T13 (F70224G0)
B:FG20C3 FG20T3 FG25C3 FG25T3 FG20W3 FG25W3 D:FD20C3 FD20T3 FD25C3 FD25T3 FD20W3 FD25W3

| Item No | Part No. | Mark | Description | | Req'd | Remarks : Serial No. |
|---|---|---|---|---|---|---|
| A1 | 216G2-40602 | | LAMP-ASSY,HEAD | ﾍｯﾄﾞﾗﾝﾌﾟｱｯｾﾝ | 2 | INC.1-14 |
| 1 | 216G2-43502 | | LENS | ﾚﾝｽﾞ | 2 | |
| 2 | 216G2-43631 | | RIM | ﾘﾑ | 2 | |
| 3 | NO PART NO. | # | HOUSING | ﾊｳｼﾞﾝｸﾞ | 2 | |
| 4 | NO PART NO. | # | REFLECTOR | ﾘﾌﾚｸﾀ | 2 | |
| 5 | 216G2-43531 | | GASKET | ｶﾞｽｹｯﾄ | 2 | |
| 6 | 216G2-43542 | | BULB,12V/55W | ﾊﾞﾙﾌﾞ | 2 | |
| 7 | 216G2-43551 | | WIRE,LEAD | ﾜｲﾔ | 2 | |
| 8 | 216G2-43562 | | BRACKET | ﾌﾞﾗｹｯﾄ | 2 | |
| 9 | 216G2-43571 | | SPRING | ｽﾌﾟﾘﾝｸﾞ | 2 | |
| 10 | 216G2-43582 | | BOLT | ﾎﾞﾙﾄ | 2 | |
| 11 | 216G2-43592 | | NUT | ﾅｯﾄ | 2 | |
| 12 | 216G2-43602 | | BOLT | ﾎﾞﾙﾄ | 2 | |
| 13 | 216G2-43611 | | NUT | ﾅｯﾄ | 2 | |
| 14 | 216G2-43622 | | SCREW | ｽｸﾘｭ | 8 | |
| A2 | 216G2-40701 | | LAMP-ASSY,FRONT-COMBINATION | ﾌﾛﾝﾄｺﾝﾋﾞﾈｰｼｮﾝﾗﾝﾌﾟｱｯｾﾝ | 2 | INC.15-19 |
| 15 | NO PART NO. | # | BODY | ﾎﾞﾃﾞｨ | 2 | |
| 16 | 216G2-40731 | | LENS | ﾚﾝｽﾞ | 2 | |
| 17 | 216G2-40711 | | BULB,12V/27W | ﾊﾞﾙﾌﾞ | 2 | |
| 18 | 216G2-40721 | | BULB,12V/10W | ﾊﾞﾙﾌﾞ | 2 | |
| 19 | NO PART NO. | | SCREW | ｽｸﾘｭ | 4 | |
| 20 | 239A2-42221 | | WIRE-HARNESS,H.GUARD | ﾜｲﾔﾊｰﾈｽ | 2 | |
| - | 534A9-22211 | | WIRE-HARNESS,H.GUARD | ﾜｲﾔﾊｰﾈｽ | 2 | [HL][BKH] |
| - | 239A2-42221 | | WIRE-HARNESS,H.GUARD | ﾜｲﾔﾊｰﾈｽ | 1 | [AW061][AW071] |
| 21 | 52N55-42301 | | WIRE-HARNESS,H.GUARD | ﾜｲﾔﾊｰﾈｽ | 1 | [AW061][AW071] |

# FIG.42 REAR COMBINATION LAMP

(F70224H0) ﾘﾔｰｺﾝﾋﾞﾈｰｼｮﾝﾗﾝﾌﾟ

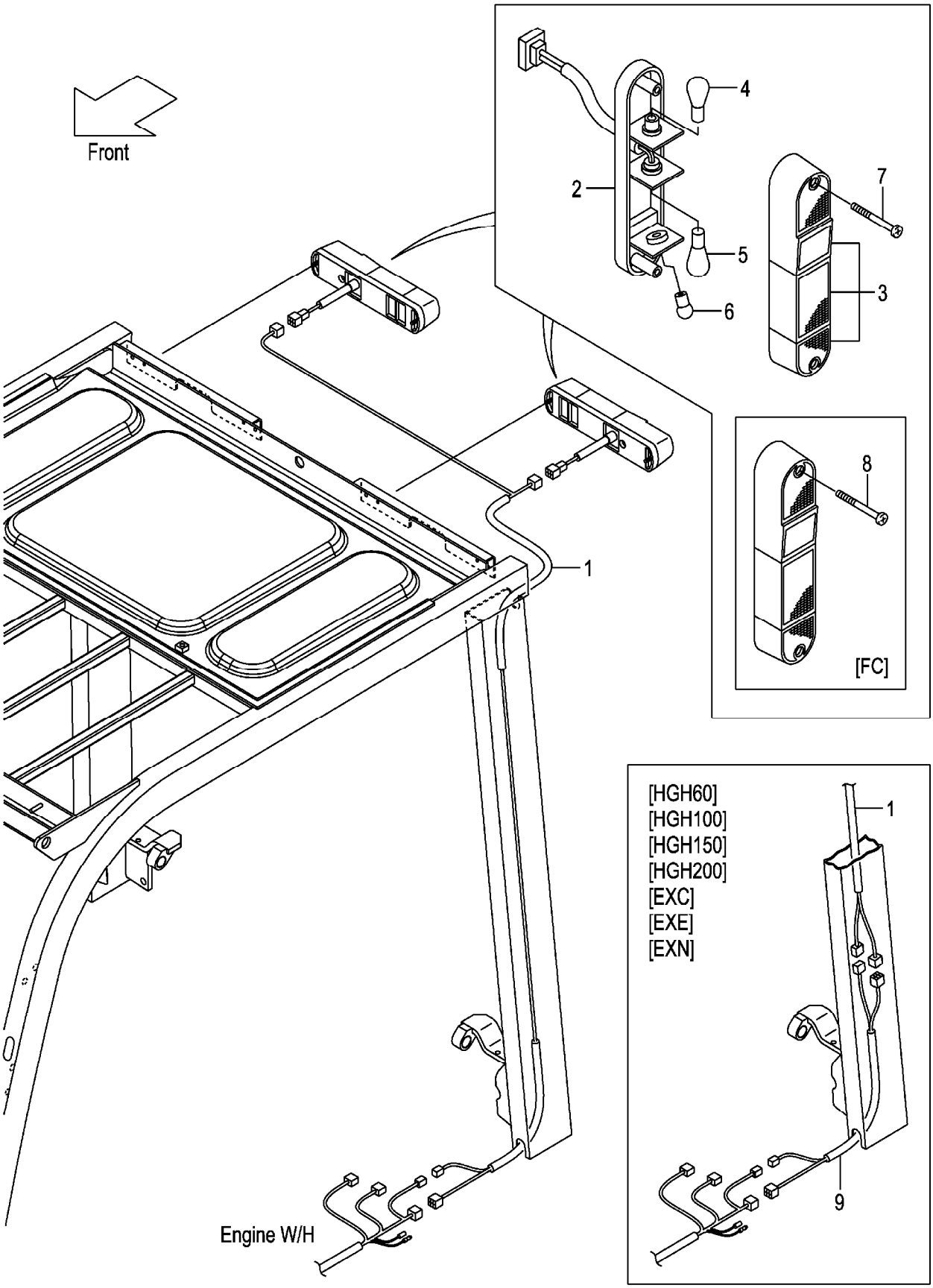

A:FG20C13 FG20T13 FG25C13 FG25T13 D:FD20C13 FD20T13 FD25C13 FD25T13
B:FG20C3 FG20T3 FG25C3 FG25T3 E:FD20C3 FD20T3 FD25C3 FD25T3
C:FG20W3 FG25W3 F:FD20W3 FD25W3

**FIG.42**
(F70224H0)

| Item No | Part No. | Mark | Description | | Req'd | Remarks : Serial No. |
|---|---|---|---|---|---|---|
| 1 | 22N52-42251 | | WIRE-HARNESS,R-COMBINATION | ﾜｲﾔﾊｰﾈｽ | 1 | |
| A1 | 209K2-42002 | | LAMP-ASSY,REAR-COMBINATION | ﾘﾔｰｺﾝﾋﾞﾈｰｼｮﾝﾗﾝﾌﾟｱｯｾﾝ | 2 | INC.2-7 |
| 2 | NO PART NO. | # | BODY | ﾎﾞﾃﾞｨ | 2 | |
| 3 | 209K2-42021 | | LENS,PLASTIC | ﾚﾝｽﾞ | 2 | |
| 4 | 210F2-42021 | | BULB,12V/23,8W | ﾊﾞﾙﾌﾞ | 2 | |
| 5 | 209K2-42041 | | BULB,12V/27W | ﾊﾞﾙﾌﾞ | 2 | |
| 6 | 210F2-42031 | | BULB,12V/10W | ﾊﾞﾙﾌﾞ | 2 | |
| 7 | 01030-05055 | | SCREW | ｽｸﾘｭ | 4 | (WITHOUT FC) |
| 8 | 514A3-72091 | | BOLT,PAN-HEAD | ﾎﾞﾙﾄ | 4 | [FC] |
| 9 | 52N55-02451 | | WIRE-HARNESS,JOINT | ﾜｲﾔﾊｰﾈｽ | 1 | [HGH060][HGH100][HGH150] [HGH200] |
| - | 52N55-02451 | | WIRE-HARNESS,JOINT | ﾜｲﾔﾊｰﾈｽ | 1 | B,E [EXC][EXE][EXN] |

# FIG.43 REAR COMBINATION LAMP [RRE][SCB001][SCBCR]

(F70224J0) リヤーコンビネーションランプ

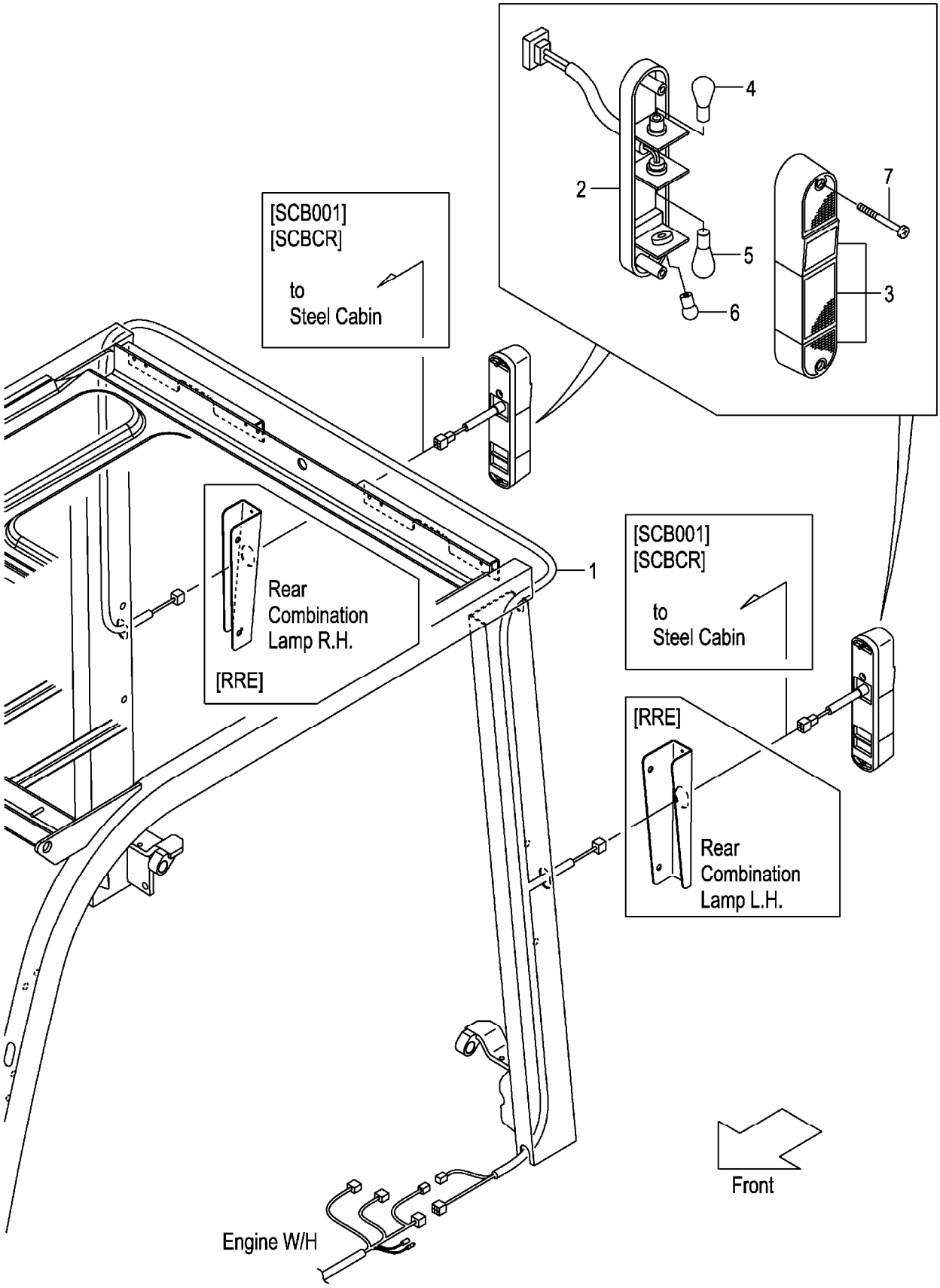

A:FG20C13 FG20T13 FG25C13 FG25T13 D:FD20C13 FD20T13 FD25C13 FD25T13
B:FG20C3 FG20T3 FG25C3 FG25T3 E:FD20C3 FD20T3 FD25C3 FD25T3
C:FG20W3 FG25W3 F:FD20W3 FD25W3

**FIG.43**
(F70224J0)

| Item No | Part No. | Mark | Description | Req'd | Remarks : Serial No. |
|---|---|---|---|---|---|
| 1 | 52N59-92201 | | WIRE-HARNESS,R-COMBINATION ﾜｲﾔﾊｰﾈｽ | 1 | [RRE] |
| - | 52N59-92201 | | WIRE-HARNESS,R-COMBINATION ﾜｲﾔﾊｰﾈｽ | 1 | B,C,E,F [SCB001] |
| - | 52N59-92201 | | WIRE-HARNESS,R-COMBINATION ﾜｲﾔﾊｰﾈｽ | 1 | B,C,E [SCBCR] |
| A1 | 209K2-42002 | | LAMP-ASSY,REAR-COMBINATION ﾘﾔｰｺﾝﾋﾞﾈｰｼｮﾝﾗﾝﾌﾟｱｯｾﾝ | 2 | [RRE] INC.2-7 |
| - | 209K2-42002 | | LAMP-ASSY,REAR-COMBINATION ﾘﾔｰｺﾝﾋﾞﾈｰｼｮﾝﾗﾝﾌﾟｱｯｾﾝ | 2 | B,C,E,F [SCB001] INC.2-7 |
| - | 209K2-42002 | | LAMP-ASSY,REAR-COMBINATION ﾘﾔｰｺﾝﾋﾞﾈｰｼｮﾝﾗﾝﾌﾟｱｯｾﾝ | 2 | B,C,E [SCBCR] INC.2-7 |
| 2 | NO PART NO. | # | BODY ﾎﾞﾃﾞｨ | 2 | [RRE] |
| - | NO PART NO. | # | BODY ﾎﾞﾃﾞｨ | 2 | B,C,E,F [SCB001] |
| - | NO PART NO. | # | BODY ﾎﾞﾃﾞｨ | 2 | B,C,E [SCBCR] |
| 3 | 209K2-42021 | | LENS,PLASTIC ﾚﾝｽﾞ | 2 | [RRE] |
| - | 209K2-42021 | | LENS,PLASTIC ﾚﾝｽﾞ | 2 | B,C,E,F [SCB001] |
| - | 209K2-42021 | | LENS,PLASTIC ﾚﾝｽﾞ | 2 | B,C,E [SCBCR] |
| 4 | 210F2-42021 | | BULB,12V/23,8W ﾊﾞﾙﾌﾞ | 2 | [RRE] |
| - | 210F2-42021 | | BULB,12V/23,8W ﾊﾞﾙﾌﾞ | 2 | B,C,E,F [SCB001] |
| - | 210F2-42021 | | BULB,12V/23,8W ﾊﾞﾙﾌﾞ | 2 | B,C,E [SCBCR] |
| 5 | 209K2-42041 | | BULB,12V/27W ﾊﾞﾙﾌﾞ | 2 | [RRE] |
| - | 209K2-42041 | | BULB,12V/27W ﾊﾞﾙﾌﾞ | 2 | B,C,E,F [SCB001] |
| - | 209K2-42041 | | BULB,12V/27W ﾊﾞﾙﾌﾞ | 2 | B,C,E [SCBCR] |
| 6 | 210F2-42031 | | BULB,12V/10W ﾊﾞﾙﾌﾞ | 2 | [RRE] |
| - | 210F2-42031 | | BULB,12V/10W ﾊﾞﾙﾌﾞ | 2 | B,C,E,F [SCB001] |
| - | 210F2-42031 | | BULB,12V/10W ﾊﾞﾙﾌﾞ | 2 | B,C,E [SCBCR] |
| 7 | 01030-05055 | | SCREW ｽｸﾘｭ | 4 | [RRE] |
| - | 01030-05055 | | SCREW ｽｸﾘｭ | 4 | B,C,E,F [SCB001] |
| - | 01030-05055 | | SCREW ｽｸﾘｭ | 4 | B,C,E [SCBCR] |

## FIG.44 LICENSE LAMP [RRE]

(F70224K0) ﾗｲｾﾝｽﾗﾝﾌﾟ

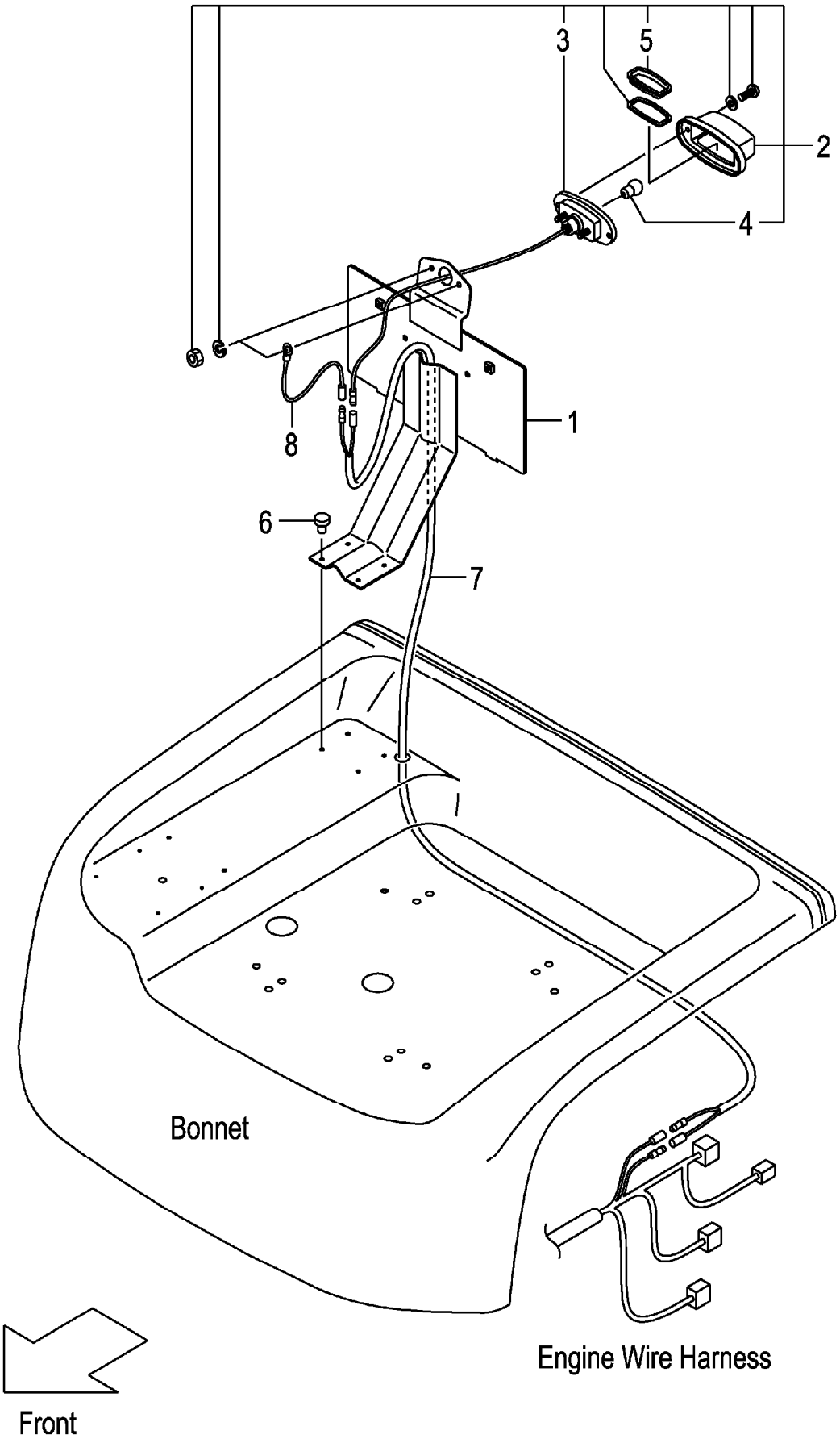

A:FG20C13 FG20T13 FG25C13 FG25T13 C:FD20C13 FD20T13 FD25C13 FD25T13 (F70224K0)
B:FG20C3 FG20T3 FG25C3 FG25T3 FG20W3 FG25W3 D:FD20C3 FD20T3 FD25C3 FD25T3 FD20W3 FD25W3

| Item No | Part No. | Mark | Description | | Req'd | Remarks : Serial No. |
|---|---|---|---|---|---|---|
| 1 | 52N59-92101 | | BRACKET,NUMBER-PLATE | ﾌﾞﾗｹｯﾄ | 1 | [RRE] |
| 2 | 22132-40202 | | LAMP,LICENCE | ﾗﾝﾌﾟ | 1 | [RRE] INC.3-5 |
| 3 | NO PART NO. | # | BODY | ﾎﾞﾃﾞｨ | 1 | [RRE] |
| 4 | 22132-40041 | | BULB,12V/10W | ﾊﾞﾙﾌﾞ | 1 | [RRE] |
| 5 | 22192-42411 | | LENS,PLASTIC | ﾚﾝｽﾞ | 1 | [RRE] |
| 6 | 22256-42001 | | RIVET | ﾘﾍﾞｯﾄ | 4 | [RRE] |
| 7 | 558A9-92001 | | WIRE-HARNESS,LICENCE | ﾜｲﾔﾊｰﾈｽ | 1 | [RRE] |
| 8 | 222A2-42511 | | WIRE,LEAD | ﾜｲﾔ | 1 | [RRE] |

# FIG.45 LICENSE LAMP [SCB001/RRE][SCBCR/RRE]

(F70224L0) ﾗｲｾﾝｽﾗﾝﾌﾟ

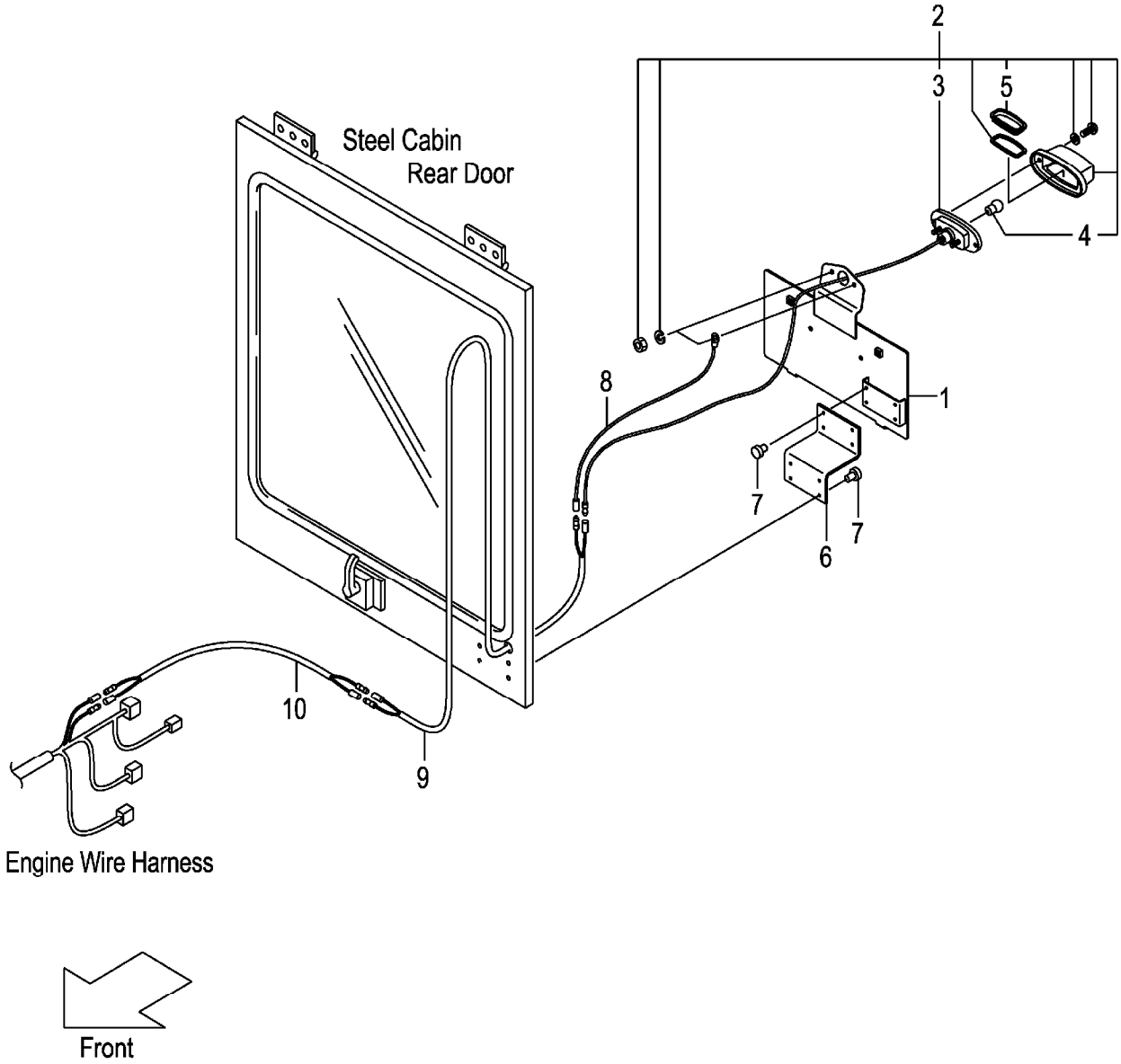

A:FG20C3 FG20T3 FG25C3 FG25T3 C:FD20C3 FD20T3 FD25C3 FD25T3
B:FG20W3 FG25W3 D:FD20W3 FD25W3

| Item No | Part No. | Mark | Description | | Req'd | Remarks : Serial No. |
|---|---|---|---|---|---|---|
| 1 | 531A0-52521 | | BRACKET,NUMBER-PLATE | ﾌﾞﾗｹｯﾄ | 1 | [SCB001/RRE] |
| - | 531A0-52521 | | BRACKET,NUMBER-PLATE | ﾌﾞﾗｹｯﾄ | 1 | A,B,C |
| | | | | | | [SCBCR/RRE] |
| 2 | 22132-40202 | | LAMP,LICENCE | ﾗﾝﾌﾟ | 1 | [SCB001/RRE] INC.3-5 |
| - | 22132-40202 | | LAMP,LICENCE | ﾗﾝﾌﾟ | 1 | A,B,C |
| | | | | | | [SCBCR/RRE] INC.3-5 |
| 3 | NO PART NO. | # | BODY | ﾎﾞﾃﾞｨ | 1 | [SCB001/RRE] |
| - | NO PART NO. | # | BODY | ﾎﾞﾃﾞｨ | 1 | A,B,C |
| | | | | | | [SCBCR/RRE] |
| 4 | 22132-40041 | | BULB,12V/10W | ﾊﾞﾙﾌﾞ | 1 | [SCB001/RRE] |
| - | 22132-40041 | | BULB,12V/10W | ﾊﾞﾙﾌﾞ | 1 | A,B,C |
| | | | | | | [SCBCR/RRE] |
| 5 | 22192-42411 | | LENS,PLASTIC | ﾚﾝｽﾞ | 1 | [SCB001/RRE] |
| - | 22192-42411 | | LENS,PLASTIC | ﾚﾝｽﾞ | 1 | A,B,C |
| | | | | | | [SCBCR/RRE] |
| 6 | 539A5-32361 | | BRACKET | ﾌﾞﾗｹｯﾄ | 1 | [SCB001/RRE] |
| - | 539A5-32361 | | BRACKET | ﾌﾞﾗｹｯﾄ | 1 | A,B,C |
| | | | | | | [SCBCR/RRE] |
| 7 | 22256-42001 | | RIVET | ﾘﾍﾞｯﾄ | 8 | [SCB001/RRE] |
| - | 22256-42001 | | RIVET | ﾘﾍﾞｯﾄ | 8 | A,B,C |
| | | | | | | [SCBCR/RRE] |
| 8 | 222A2-42511 | | WIRE,LEAD | ﾜｲﾔ | 1 | [SCB001/RRE] |
| - | 222A2-42511 | | WIRE,LEAD | ﾜｲﾔ | 1 | A,B,C |
| | | | | | | [SCBCR/RRE] |
| 9 | 534A9-92131 | | WIRE-HARNESS,LICENCE | ﾜｲﾔﾊｰﾈｽ | 1 | [SCB001/RRE] |
| - | 534A9-92131 | | WIRE-HARNESS,LICENCE | ﾜｲﾔﾊｰﾈｽ | 1 | A,B,C |
| | | | | | | [SCBCR/RRE] |
| 10 | 558A9-92001 | | WIRE-HARNESS,LICENCE | ﾜｲﾔﾊｰﾈｽ | 1 | [SCB001/RRE] |
| - | 558A9-92001 | | WIRE-HARNESS,LICENCE | ﾜｲﾔﾊｰﾈｽ | 1 | A,B,C |
| | | | | | | [SCBCR/RRE] |

# FIG.46 LICENSE LAMP [RRE/LPG][RRE/LPO]

(F70224M0) ﾗｲｾﾝｽﾗﾝﾌﾟ

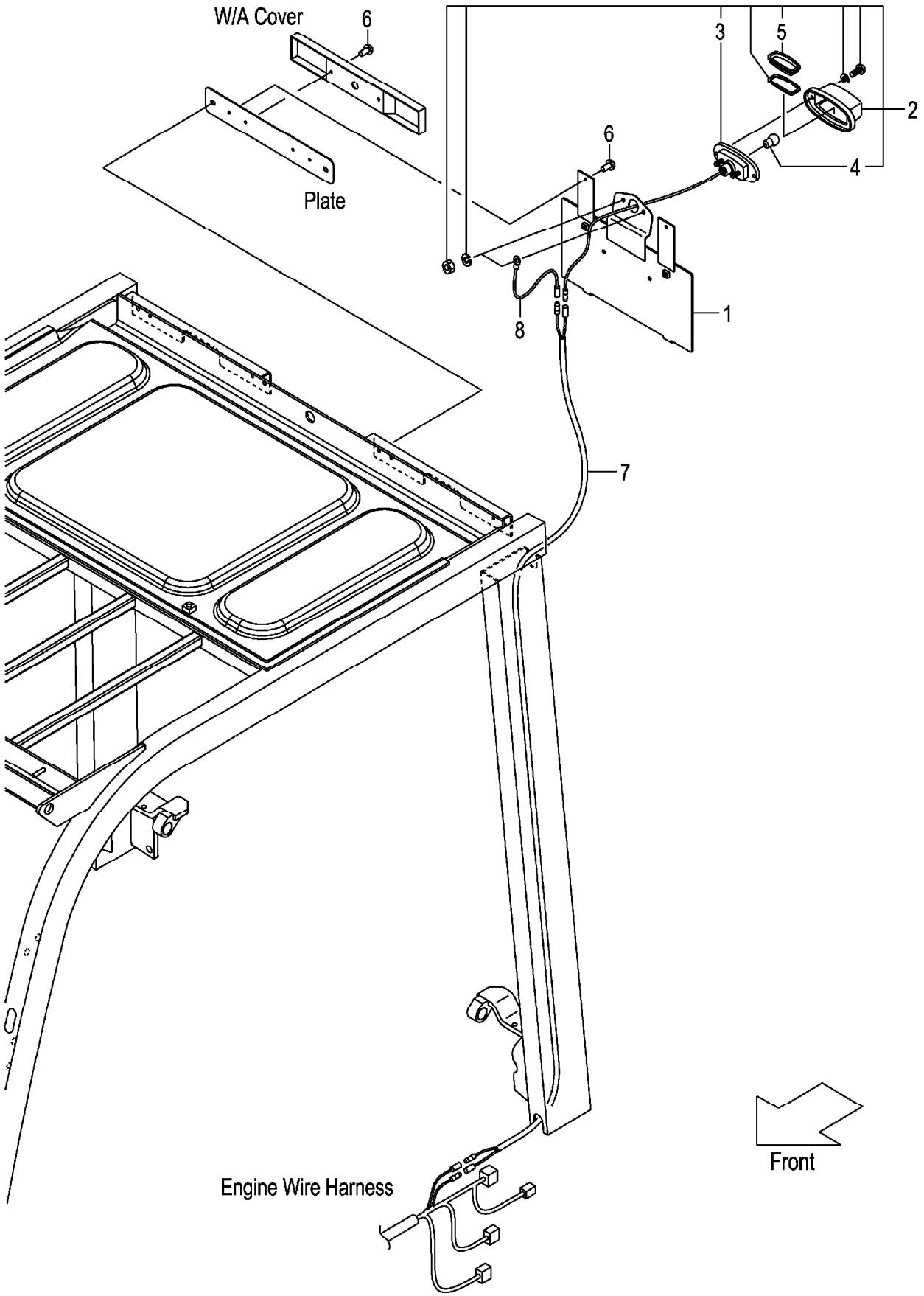

**FIG.46**

A:FG20C13 FG20T13 FG25C13 FG25T13
B:FG20C3 FG20T3 FG25C3 FG25T3 FG20W3 FG25W3

(F70224M0)

| Item No | Part No. | Mark | Description | | Req'd | Remarks : Serial No. |
|---|---|---|---|---|---|---|
| 1 | 535C9-92011 | | BRACKET,NUMBER-PLATE | ﾌﾞﾗｹｯﾄ | 1 | [RRE/LPG][RRE/LPO] |
| 2 | 22132-40202 | | LAMP,LICENCE | ﾗﾝﾌﾟ | 1 | [RRE/LPG][RRE/LPO] INC.3-5 |
| 3 | NO PART NO. | # | BODY | ﾎﾞﾃﾞｨ | 1 | [RRE/LPG][RRE/LPO] |
| 4 | 22132-40041 | | BULB,12V/10W | ﾊﾞﾙﾌﾞ | 1 | [RRE/LPG][RRE/LPO] |
| 5 | 22192-42411 | | LENS,PLASTIC | ﾚﾝｽﾞ | 1 | [RRE/LPG][RRE/LPO] |
| 6 | 22256-42001 | | RIVET | ﾘﾍﾞｯﾄ | 4 | [RRE/LPG][RRE/LPO] |
| 7 | 558A9-92001 | | WIRE-HARNESS,LICENCE | ﾜｲﾔﾊｰﾈｽ | 1 | [RRE/LPG][RRE/LPO] |
| 8 | 222A2-42511 | | WIRE,LEAD | ﾜｲﾔ | 1 | [RRE/LPG][RRE/LPO] |

# FIG.47 LICENSE LAMP [LP]

(F70224N0) ﾗｲｾﾝｽﾗﾝﾌﾟ

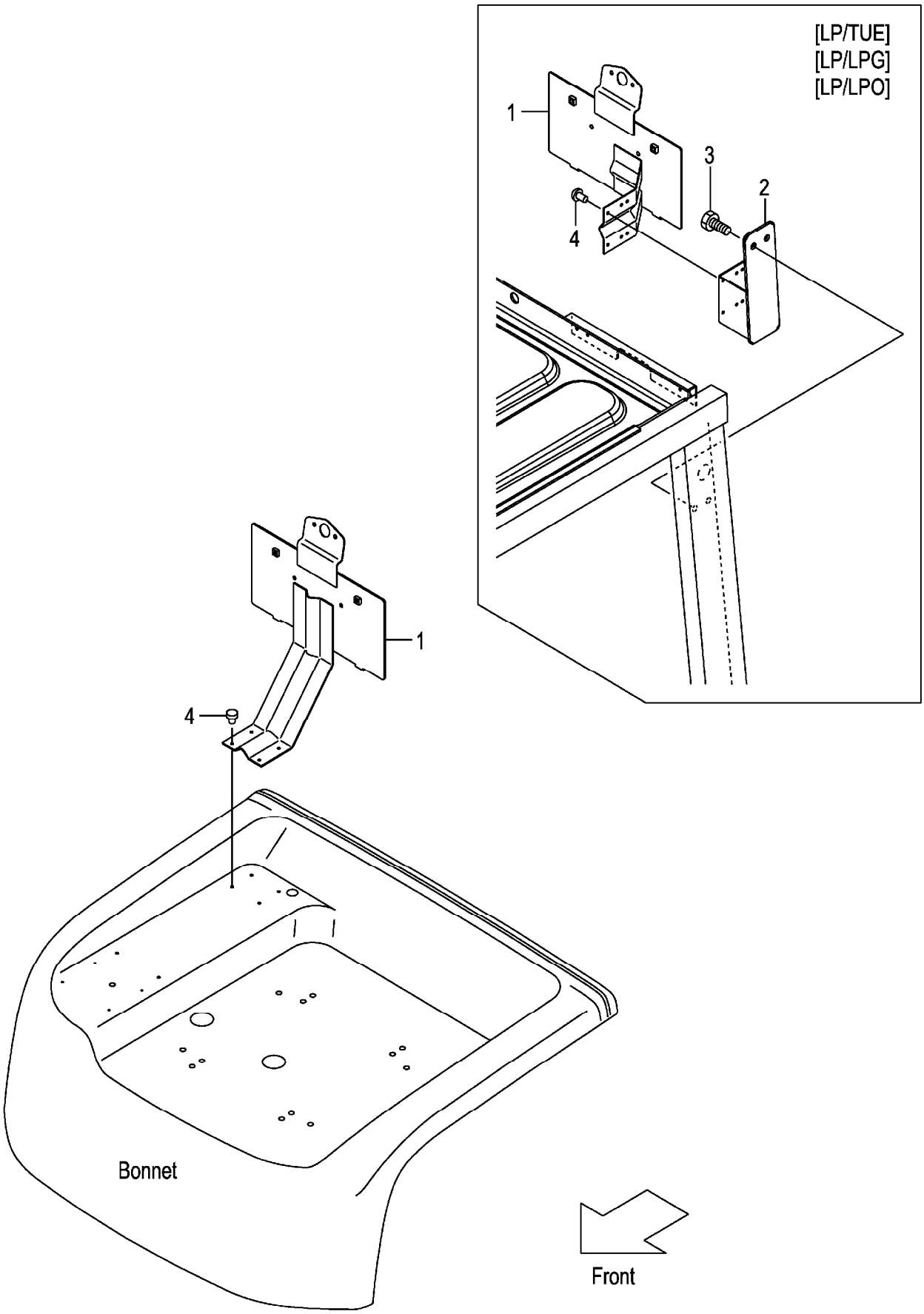

A:FG20C13 FG20T13 FG25C13 FG25T13 C:FD20C13 FD20T13 FD25C13 FD25T13 (F70224N0)
B:FG20C3 FG20T3 FG25C3 FG25T3 FG20W3 FG25W3 D:FD20C3 FD20T3 FD25C3 FD25T3 FD20W3 FD25W3

| Item No | Part No. | Mark | Description | Req'd | Remarks : Serial No. |
|---|---|---|---|---|---|
| 1 | 52N59-92101 | | BRACKET,NUMBER-PLATE ﾌﾞﾗｹｯﾄ | 1 | [LP] |
| - | 509P9-90101 | | BRACKET,NUMBER-PLATE ﾌﾞﾗｹｯﾄ | 1 | [LP/TUE] |
| - | 509P9-90101 | | BRACKET,NUMBER-PLATE ﾌﾞﾗｹｯﾄ | 1 | A,B |
| | | | | | [LP/LPG][LP/LPO] |
| 2 | 52N59-92501 | | BRACKET,LP ﾌﾞﾗｹｯﾄ | 1 | [LP/TUE] |
| - | 52N59-92501 | | BRACKET,LP ﾌﾞﾗｹｯﾄ | 1 | A,B |
| | | | | | [LP/LPG][LP/LPO] |
| 3 | 01185-08016 | | BOLT ﾎﾞﾙﾄ | 2 | [LP/TUE] |
| - | 01185-08016 | | BOLT ﾎﾞﾙﾄ | 2 | A,B |
| | | | | | [LP/LPG][LP/LPO] |
| 4 | 22256-42001 | | RIVET ﾘﾍﾞｯﾄ | 4 | [LP] |

# FIG.48 REAR WORKING LIGHT [RWLR]

(F70224P0) リヤーワーキング゛ライト

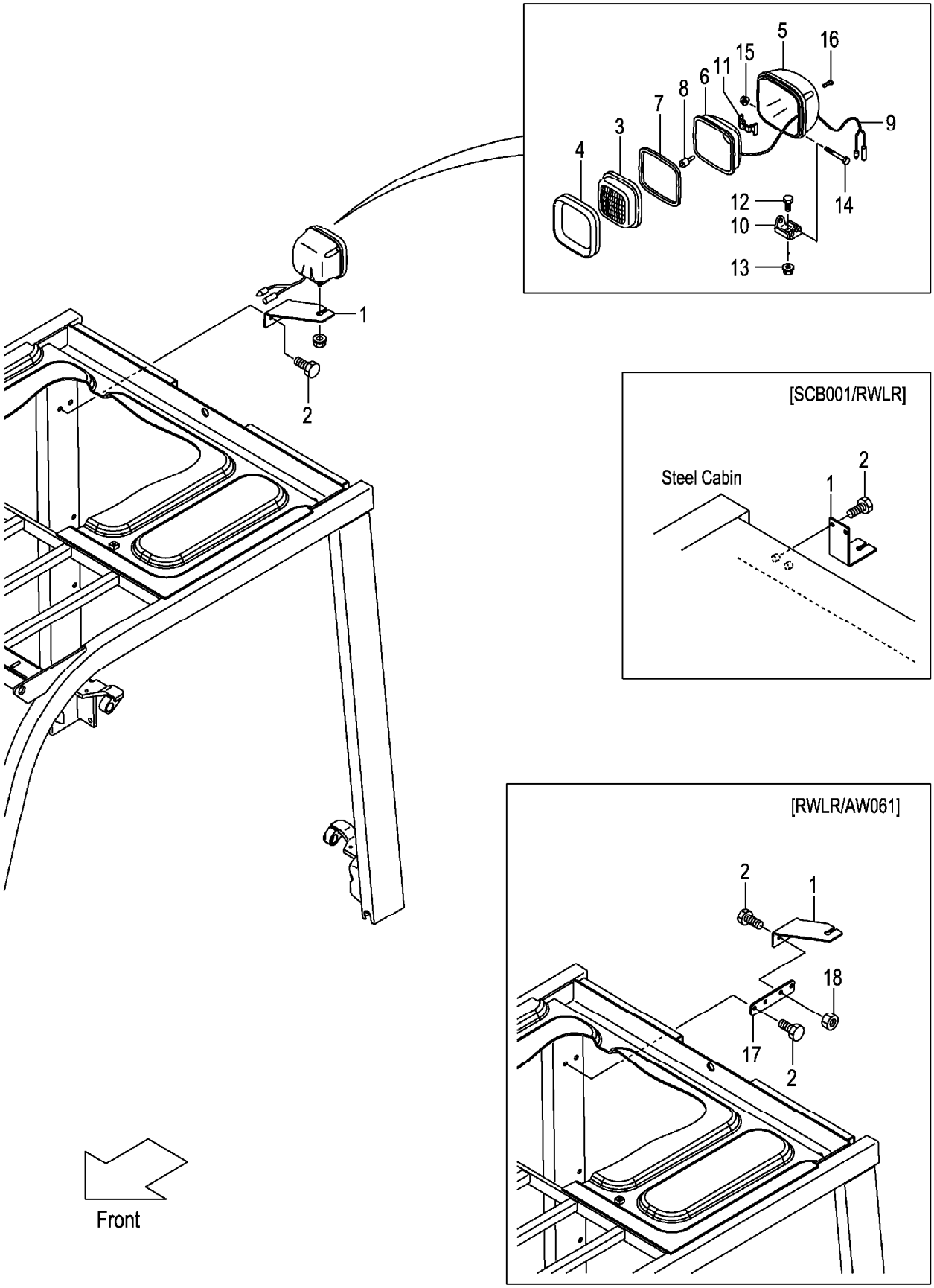

A:FG20C13 FG20T13 FG25C13 FG25T13 C:FD20C13 FD20T13 FD25C13 FD25T13 (F70224P0)
B:FG20C3 FG20T3 FG25C3 FG25T3 FG20W3 FG25W3 D:FD20C3 FD20T3 FD25C3 FD25T3 FD20W3 FD25W3

| Item No | Part No. | Mark | Description | | Req'd | Remarks : Serial No. |
|---|---|---|---|---|---|---|
| 1 | 52N51-42161 | | BRACKET,RWL,RH | ﾌﾞﾗｹｯﾄ | 1 | [RWLR] |
| - | 530C1-42001 | | BRACKET,RWL | ﾌﾞﾗｹｯﾄ | 1 | B,D |
| | | | | | | [SCB001/RWLR] |
| 2 | 01185-08016 | | BOLT | ﾎﾞﾙﾄ | 2 | [RWLR] |
| - | 01185-08016 | | BOLT | ﾎﾞﾙﾄ | 4 | [RWLR/AW061] |
| - | 01185-08020 | | BOLT | ﾎﾞﾙﾄ | 2 | B,D |
| | | | | | | [SCB001/RWLR] |
| A1 | 216G2-40602 | | LAMP-ASSY,HEAD | ﾍｯﾄﾞﾗﾝﾌﾟｱｯｾﾝ | 1 | [RWLR] INC.3-16 |
| 3 | 216G2-43502 | | LENS | ﾚﾝｽﾞ | 1 | [RWLR] |
| 4 | 216G2-43631 | | RIM | ﾘﾑ | 1 | [RWLR] |
| 5 | NO PART NO. | # | HOUSING | ﾊｳｼﾞﾝｸﾞ | 1 | [RWLR] |
| 6 | NO PART NO. | # | REFLECTOR | ﾘﾌﾚｸﾀ | 1 | [RWLR] |
| 7 | 216G2-43531 | | GASKET | ｶﾞｽｹｯﾄ | 1 | [RWLR] |
| 8 | 216G2-43542 | | BULB,12V/55W | ﾊﾞﾙﾌﾞ | 1 | [RWLR] |
| 9 | 216G2-43551 | | WIRE,LEAD | ﾜｲﾔ | 1 | [RWLR] |
| 10 | 216G2-43562 | | BRACKET | ﾌﾞﾗｹｯﾄ | 1 | [RWLR] |
| 11 | 216G2-43571 | | SPRING | ｽﾌﾟﾘﾝｸﾞ | 1 | [RWLR] |
| 12 | 216G2-43582 | | BOLT | ﾎﾞﾙﾄ | 1 | [RWLR] |
| 13 | 216G2-43592 | | NUT | ﾅｯﾄ | 1 | [RWLR] |
| 14 | 216G2-43602 | | BOLT | ﾎﾞﾙﾄ | 1 | [RWLR] |
| 15 | 216G2-43611 | | NUT | ﾅｯﾄ | 1 | [RWLR] |
| 16 | 216G2-43622 | | SCREW | ｽｸﾘｭ | 4 | [RWLR] |
| 17 | 52N51-42301 | | PLATE | ﾌﾟﾚｰﾄ | 1 | [RWLR/AW061] |
| 18 | 01400-00008 | | NUT | ﾅｯﾄ | 2 | [RWLR/AW061] |

# FIG.49 REAR WORKING LIGHT [RWLL]

(F70224Q0) リヤーワーキング゛ライト

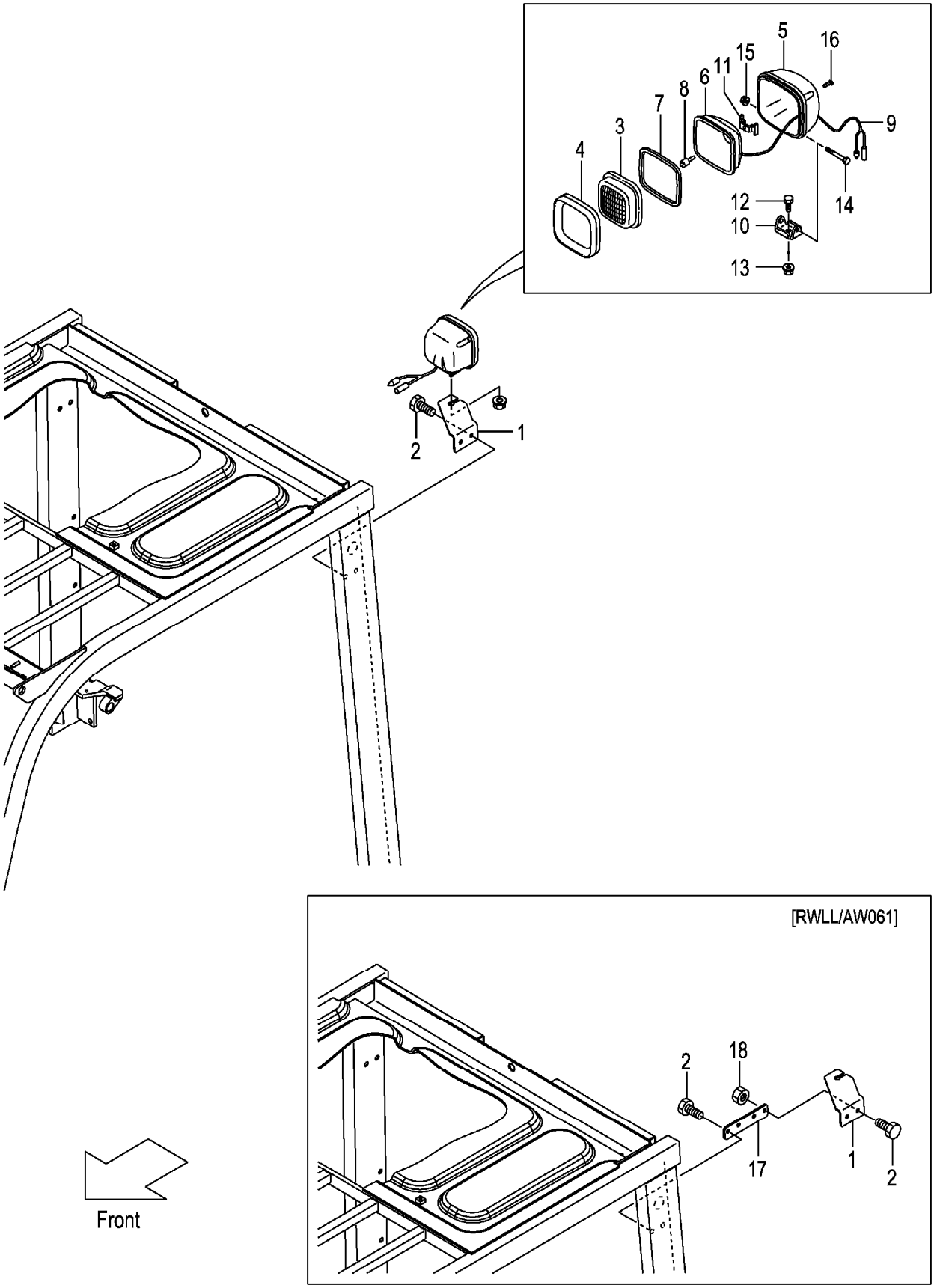

A:FG20C13 FG20T13 FG25C13 FG25T13 C:FD20C13 FD20T13 FD25C13 FD25T13 (F70224Q0)
B:FG20C3 FG20T3 FG25C3 FG25T3 FG20W3 FG25W3 D:FD20C3 FD20T3 FD25C3 FD25T3 FD20W3 FD25W3

| Item No | Part No. | Mark | Description | | Req'd | Remarks : Serial No. |
|---|---|---|---|---|---|---|
| 1 | 52N51-42151 | | BRACKET,RWL,LH | ﾌﾞﾗｹｯﾄ | 1 | [RWLL] |
| 2 | 01185-08016 | | BOLT | ﾎﾞﾙﾄ | 2 | [RWLL] |
| - | 01185-08016 | | BOLT | ﾎﾞﾙﾄ | 4 | [RWLL/AW061] |
| A1 | 216G2-40602 | | LAMP-ASSY,HEAD | ﾍｯﾄﾞﾗﾝﾌﾟｱｯｾﾝ | 1 | [RWLL] INC.3-16 |
| 3 | 216G2-43502 | | LENS | ﾚﾝｽﾞ | 1 | [RWLL] |
| 4 | 216G2-43631 | | RIM | ﾘﾑ | 1 | [RWLL] |
| 5 | NO PART NO. | # | HOUSING | ﾊｳｼﾞﾝｸﾞ | 1 | [RWLL] |
| 6 | NO PART NO. | # | REFLECTOR | ﾘﾌﾚｸﾀ | 1 | [RWLL] |
| 7 | 216G2-43531 | | GASKET | ｶﾞｽｹｯﾄ | 1 | [RWLL] |
| 8 | 216G2-43542 | | BULB,12V/55W | ﾊﾞﾙﾌﾞ | 1 | [RWLL] |
| 9 | 216G2-43551 | | WIRE,LEAD | ﾜｲﾔ | 1 | [RWLL] |
| 10 | 216G2-43562 | | BRACKET | ﾌﾞﾗｹｯﾄ | 1 | [RWLL] |
| 11 | 216G2-43571 | | SPRING | ｽﾌﾟﾘﾝｸﾞ | 1 | [RWLL] |
| 12 | 216G2-43582 | | BOLT | ﾎﾞﾙﾄ | 1 | [RWLL] |
| 13 | 216G2-43592 | | NUT | ﾅｯﾄ | 1 | [RWLL] |
| 14 | 216G2-43602 | | BOLT | ﾎﾞﾙﾄ | 1 | [RWLL] |
| 15 | 216G2-43611 | | NUT | ﾅｯﾄ | 1 | [RWLL] |
| 16 | 216G2-43622 | | SCREW | ｽｸﾘｭ | 4 | [RWLL] |
| 17 | 52N51-42301 | | PLATE | ﾌﾟﾚｰﾄ | 1 | [RWLL/AW061] |
| 18 | 01400-00008 | | NUT | ﾅｯﾄ | 2 | [RWLL/AW061] |

# FIG.50 REAR WORKING LIGHT [RWL2]

(F70224R0) リヤーワーキング゛ライト

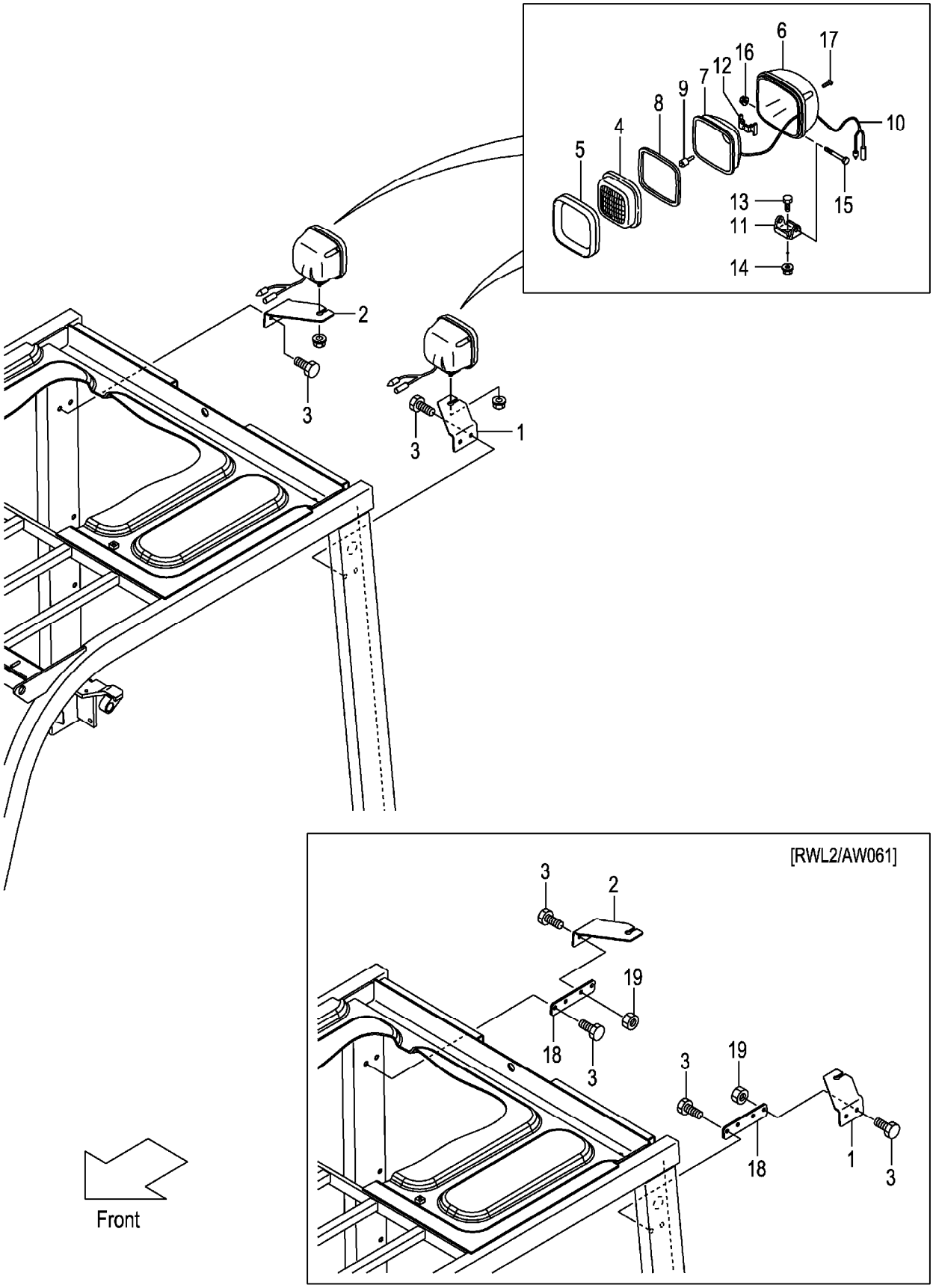

A:FG20C13 FG20T13 FG25C13 FG25T13 C:FD20C13 FD20T13 FD25C13 FD25T13 (F70224R0)
B:FG20C3 FG20T3 FG25C3 FG25T3 FG20W3 FG25W3 D:FD20C3 FD20T3 FD25C3 FD25T3 FD20W3 FD25W3

| Item No | Part No. | Mark | Description | | Req'd | Remarks : Serial No. |
|---|---|---|---|---|---|---|
| 1 | 52N51-42151 | | BRACKET,RWL,LH | ﾌﾞﾗｹｯﾄ | 1 | [RWL2] |
| 2 | 52N51-42161 | | BRACKET,RWL,RH | ﾌﾞﾗｹｯﾄ | 1 | [RWL2] |
| 3 | 01185-08016 | | BOLT | ﾎﾞﾙﾄ | 4 | [RWL2] |
| - | 01185-08016 | | BOLT | ﾎﾞﾙﾄ | 8 | [RWL2/AW061] |
| A1 | 216G2-40602 | | LAMP-ASSY,HEAD | ﾍｯﾄﾞﾗﾝﾌﾟｱｯｾﾝ | 2 | [RWL2] INC.4-17 |
| 4 | 216G2-43502 | | LENS | ﾚﾝｽﾞ | 2 | [RWL2] |
| 5 | 216G2-43631 | | RIM | ﾘﾑ | 2 | [RWL2] |
| 6 | NO PART NO. | # | HOUSING | ﾊｳｼﾞﾝｸﾞ | 2 | [RWL2] |
| 7 | NO PART NO. | # | REFLECTOR | ﾘﾌﾚｸﾀ | 2 | [RWL2] |
| 8 | 216G2-43531 | | GASKET | ｶﾞｽｹｯﾄ | 2 | [RWL2] |
| 9 | 216G2-43542 | | BULB,12V/55W | ﾊﾞﾙﾌﾞ | 2 | [RWL2] |
| 10 | 216G2-43551 | | WIRE,LEAD | ﾜｲﾔ | 2 | [RWL2] |
| 11 | 216G2-43562 | | BRACKET | ﾌﾞﾗｹｯﾄ | 2 | [RWL2] |
| 12 | 216G2-43571 | | SPRING | ｽﾌﾟﾘﾝｸﾞ | 2 | [RWL2] |
| 13 | 216G2-43582 | | BOLT | ﾎﾞﾙﾄ | 2 | [RWL2] |
| 14 | 216G2-43592 | | NUT | ﾅｯﾄ | 2 | [RWL2] |
| 15 | 216G2-43602 | | BOLT | ﾎﾞﾙﾄ | 2 | [RWL2] |
| 16 | 216G2-43611 | | NUT | ﾅｯﾄ | 2 | [RWL2] |
| 17 | 216G2-43622 | | SCREW | ｽｸﾘｭ | 8 | [RWL2] |
| 18 | 52N51-42301 | | PLATE | ﾌﾟﾚｰﾄ | 2 | [RWL2/AW061] |
| 19 | 01400-00008 | | NUT | ﾅｯﾄ | 4 | [RWL2/AW061] |

# FIG.51 REAR WORKING LIGHT WIRE HARNESS [RWL]

(F70224S0) リヤーワーキング゛ライトワイヤハーネス

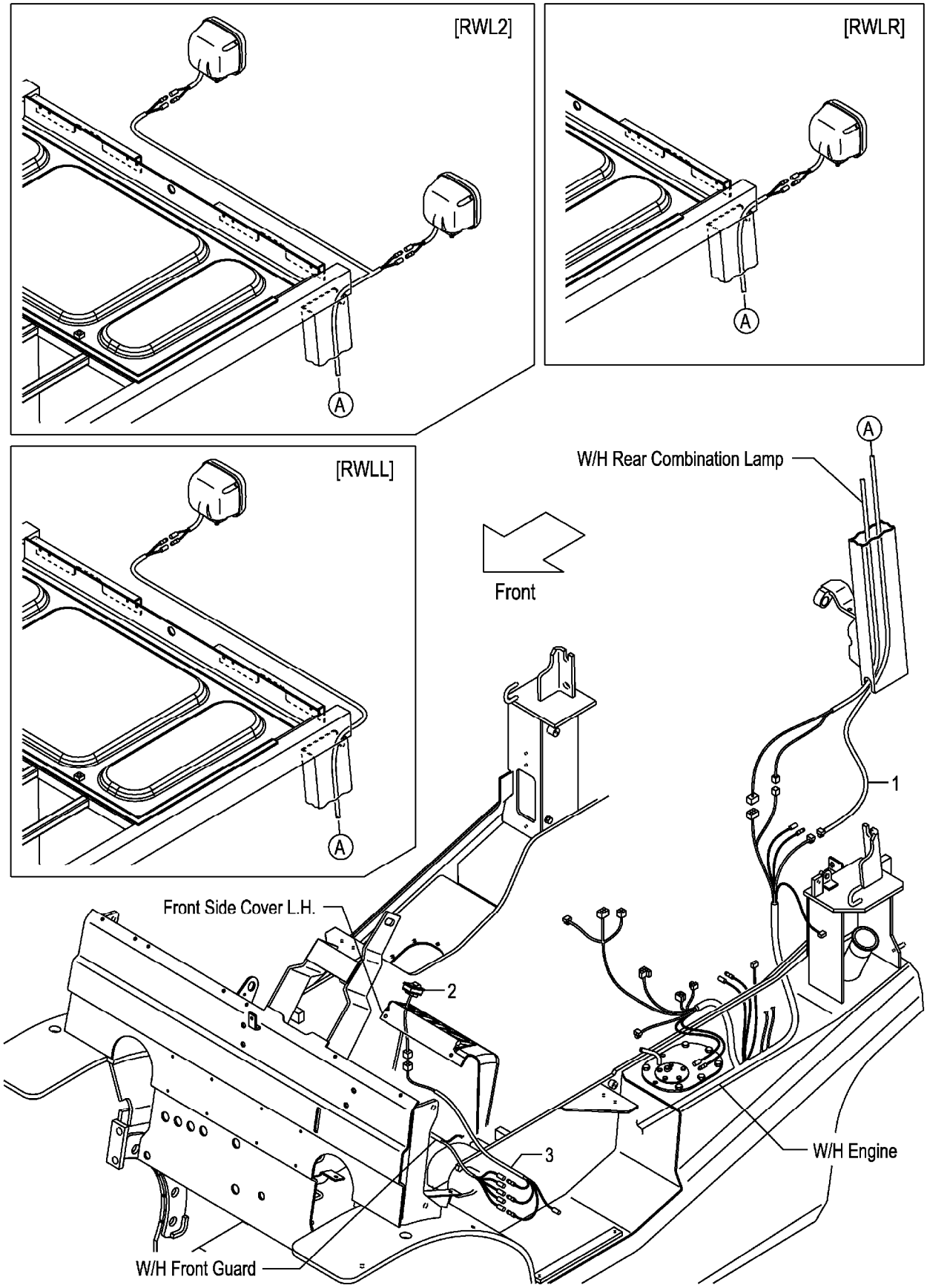

A:FG20C13 FG20T13 FG25C13 FG25T13 C:FD20C13 FD20T13 FD25C13 FD25T13 (F70224S0)
B:FG20C3 FG20T3 FG25C3 FG25T3 FG20W3 FG25W3 D:FD20C3 FD20T3 FD25C3 FD25T3 FD20W3 FD25W3

| Item No | Part No. | Mark | Description | | Req'd | Remarks : Serial No. |
|---|---|---|---|---|---|---|
| 1 | 52N51-42101 | | WIRE,LEAD,RWL | ﾜｲﾔ | 1 | [RWLR] |
| - | 52N51-42111 | | WIRE,LEAD,RWL | ﾜｲﾔ | 1 | [RWLL] |
| - | 52N51-42121 | | WIRE,LEAD,RWL | ﾜｲﾔ | 1 | [RWL2] |
| 2 | 52N51-42401 | | SWITCH,RWL | ｽｲｯﾁ | 1 | [RWLR][RWLL][RWL2] |
| 3 | 52N51-42411 | | WIRE-HARNESS,SWITCH | ﾜｲﾔﾊｰﾈｽ | 1 | [RWLR][RWLL][RWL2] |
| - | 52N51-42511 | | WIRE-HARNESS,SWITCH | ﾜｲﾔﾊｰﾈｽ | 1 | [RWLR/PLR][RWLL/PLR] |
| | | | | | | [RWL2/PLR] |

# FIG.52 REAR WORKING LIGHT WIRE HARNESS [RWL/BBR]

(F70224T0) リヤーワーキング゛ライトワイヤハーネス

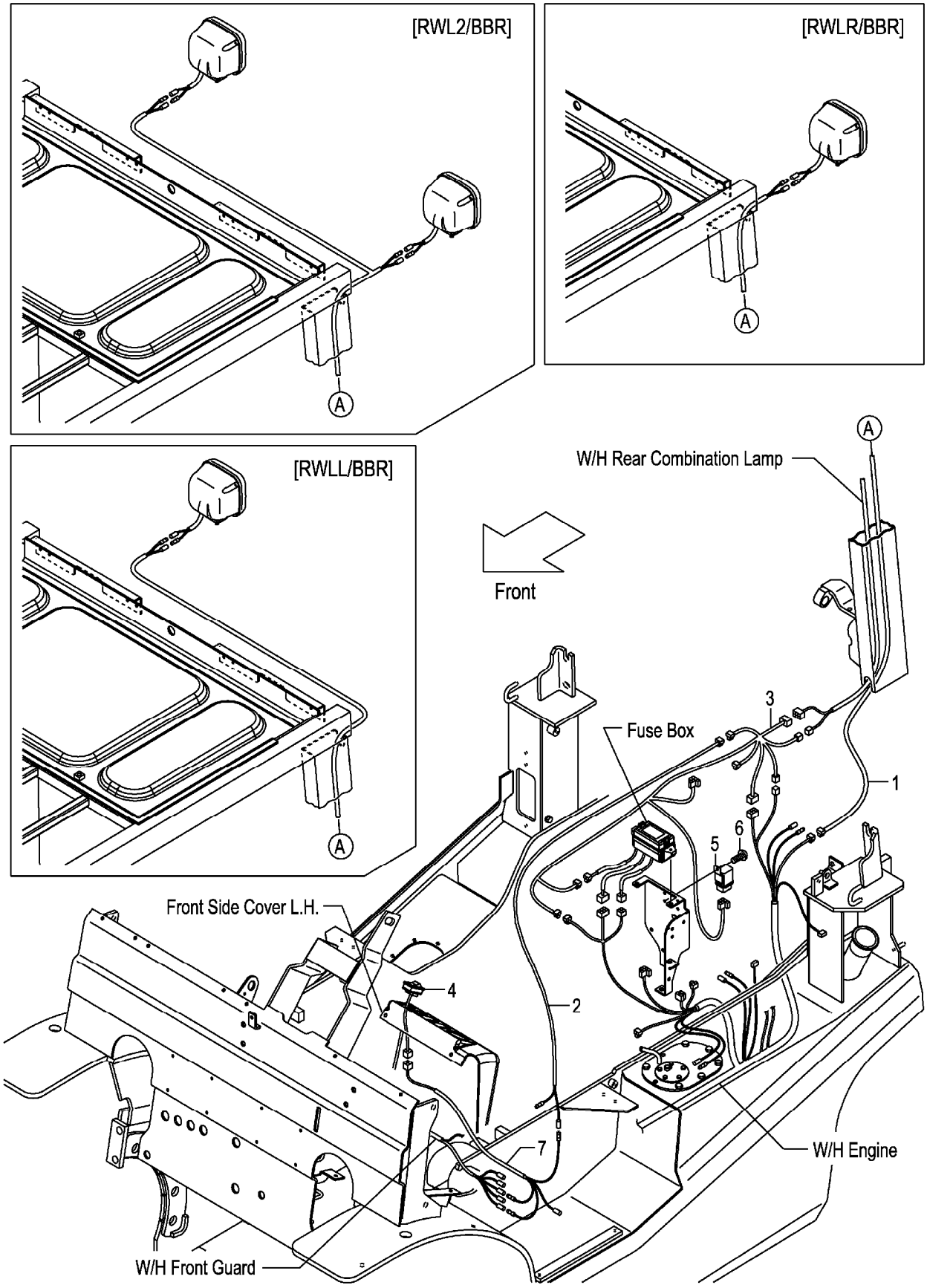

A:FG20C13 FG20T13 FG25C13 FG25T13 C:FD20C13 FD20T13 FD25C13 FD25T13 (F70224T0)
B:FG20C3 FG20T3 FG25C3 FG25T3 FG20W3 FG25W3 D:FD20C3 FD20T3 FD25C3 FD25T3 FD20W3 FD25W3

| Item No | Part No. | Mark | Description | | Req'd | Remarks : Serial No. |
|---|---|---|---|---|---|---|
| 1 | 52N51-42101 | | WIRE,LEAD,RWL | ﾜｲﾔ | 1 | [RWLR/BBR] |
| - | 52N51-42111 | | WIRE,LEAD,RWL | ﾜｲﾔ | 1 | [RWLL/BBR] |
| - | 52N51-42121 | | WIRE,LEAD,RWL | ﾜｲﾔ | 1 | [RWL2/BBR] |
| 2 | 516G1-42111 | | WIRE,LEAD,RWL | ﾜｲﾔ | 1 | [RWLR/BBR][RWLL/BBR] [RWL2/BBR] |
| 3 | 52N58-92111 | | WIRE-HARNESS,BEARING | ﾜｲﾔﾊｰﾈｽ | 1 | [RWLR/BBR][RWLL/BBR] [RWL2/BBR] |
| 4 | 52N51-42401 | | SWITCH,RWL | ｽｲｯﾁ | 1 | [RWLR/BBR][RWLL/BBR] [RWL2/BBR] |
| 5 | 26062-42881 | | RELAY,12V | ﾘﾚｰ | 1 | [RWLR/BBR][RWLL/BBR] [RWL2/BBR] |
| 6 | 214A2-42611 | | SCREW | ｽｸﾘｭ | 1 | [RWLR/BBR][RWLL/BBR] [RWL2/BBR] |
| 7 | 52N51-42411 | | WIRE-HARNESS,SWITCH | ﾜｲﾔﾊｰﾈｽ | 1 | [RWLR/BBR][RWLL/BBR] [RWL2/BBR] |
| - | 52N51-42511 | | WIRE-HARNESS,SWITCH | ﾜｲﾔﾊｰﾈｽ | 1 | [RWLR/BBR/PLR][RWLL/BBR/PLR] [RWL2/BBR/PLR] |

# FIG.53 REVOLVING LIGHT [RLY][RLR]

(F70224U0) ﾘﾎﾞﾙﾋﾞﾝｸﾞﾗｲﾄ

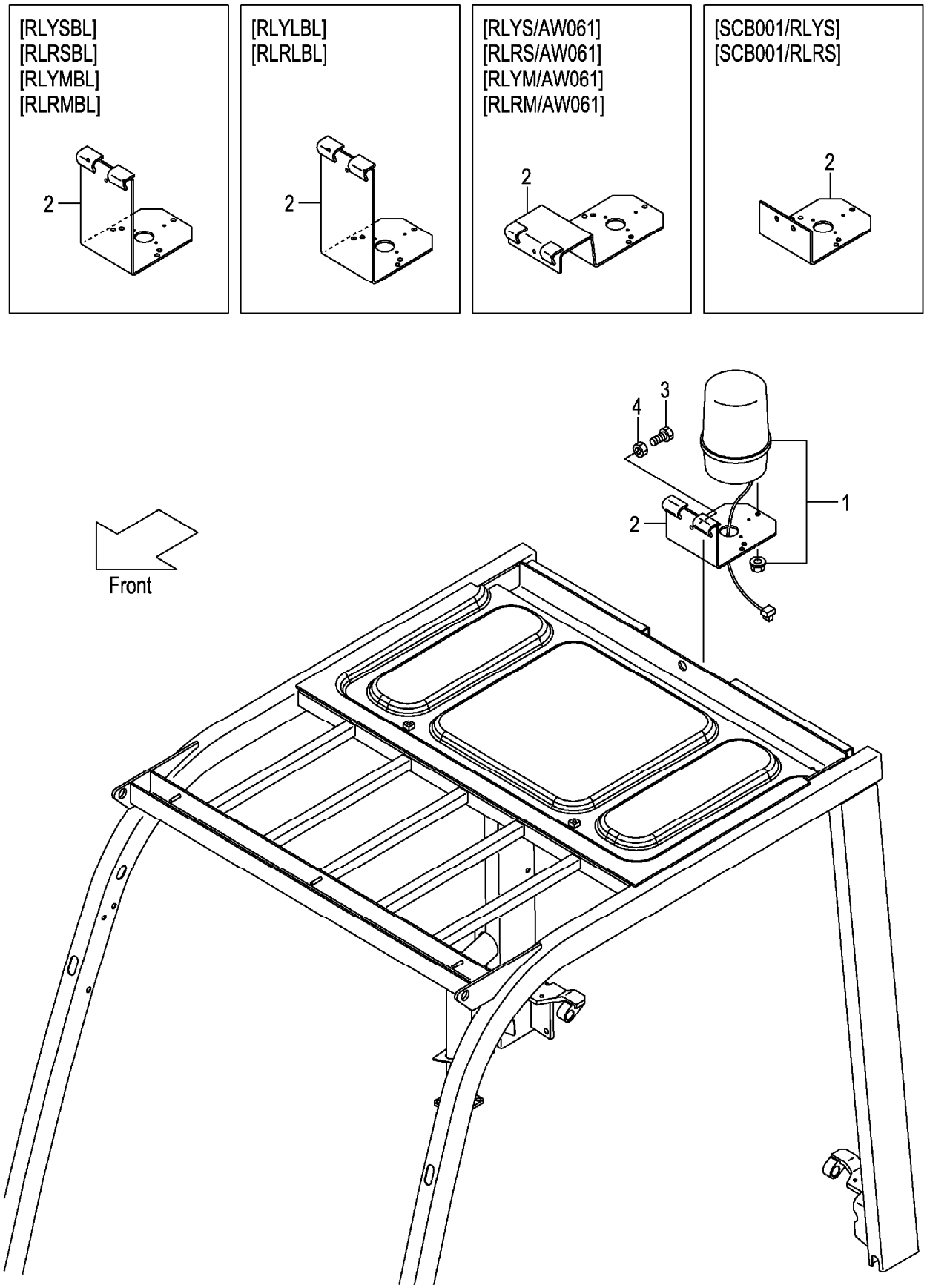

A:FG20C13 FG20T13 FG25C13 FG25T13 C:FD20C13 FD20T13 FD25C13 FD25T13 (F70224U0)
B:FG20C3 FG20T3 FG25C3 FG25T3 FG20W3 FG25W3 D:FD20C3 FD20T3 FD25C3 FD25T3 FD20W3 FD25W3

| Item No | Part No. | Mark | Description | | Req'd | Remarks : Serial No. |
|---|---|---|---|---|---|---|
| 1 | 514A1-41001 | | LIGHT,REVOLVING | ﾗｲﾄ | 1 | [RLYS][RLYSBL] |
| - | 514A1-41011 | | LIGHT,REVOLVING | ﾗｲﾄ | 1 | [RLRS][RLRSBL] |
| - | 514A1-41021 | | LIGHT,REVOLVING | ﾗｲﾄ | 1 | [RLYM][RLYMBL] |
| - | 514A1-41031 | | LIGHT,REVOLVING | ﾗｲﾄ | 1 | [RLRM][RLRMBL] |
| - | 52N58-92201 | | LIGHT,REVOLVING | ﾗｲﾄ | 1 | [RLYL][RLYLBL] |
| - | 52N58-92211 | | LIGHT,REVOLVING | ﾗｲﾄ | 1 | [RLRL][RLRLBL] |
| 2 | 529F1-42251 | | BRACKET,REVOLVING | ﾌﾞﾗｹｯﾄ | 1 | [RLYS][RLRS][RLYM][RLRM] [RLYL][RLRL] |
| - | 529F1-42201 | | BRACKET,REVOLVING | ﾌﾞﾗｹｯﾄ | 1 | [RLYSBL][RLRSBL][RLYMBL] [RLRMBL] |
| - | 52N58-92251 | | BRACKET,REVOLVING | ﾌﾞﾗｹｯﾄ | 1 | [RLYLBL][RLRLBL] |
| - | 539A8-92251 | | BRACKET,REVOLVING | ﾌﾞﾗｹｯﾄ | 1 | [RLYS/AW061][RLRS/AW061] [RLYM/AW061][RLRM/AW061] |
| - | 535C8-92051 | | BRACKET,REVOLVING | ﾌﾞﾗｹｯﾄ | 1 | B,D [SCB001/RLYS][SCB001/RLRS] |
| 3 | 01100-08020 | | BOLT | ﾎﾞﾙﾄ | 3 | [RLYS][RLYM][RLYL] |
| - | 01100-08020 | | BOLT | ﾎﾞﾙﾄ | 3 | [RLRS][RLRM][RLRL] |
| - | 01100-08020 | | BOLT | ﾎﾞﾙﾄ | 3 | [RLYSBL][RLRSBL][RLYMBL] [RLRMBL][RLYLBL][RLRLBL] |
| - | 01185-08020 | | BOLT | ﾎﾞﾙﾄ | 2 | B,D [SCB001/RLYS][SCB001/RLRS] |
| 4 | 01400-00008 | | NUT | ﾅｯﾄ | 3 | [RLYS][RLYM][RLYL] (WITHOUT SCB001/RLYS) |
| - | 01400-00008 | | NUT | ﾅｯﾄ | 3 | [RLRS][RLRM][RLRL] (WITHOUT SCB001/RLRS) |
| - | 01400-00008 | | NUT | ﾅｯﾄ | 3 | [RLYSBL][RLRSBL][RLYMBL] [RLRMBL][RLYLBL][RLRLBL] |

# FIG.54 REVOLVING LIGHT WIRE HARNESS [RLY][RLR]

(F70224W0) ﾘﾎﾞﾙﾋﾞﾝｸﾞﾗｲﾄﾜｲﾔﾊｰﾈｽ

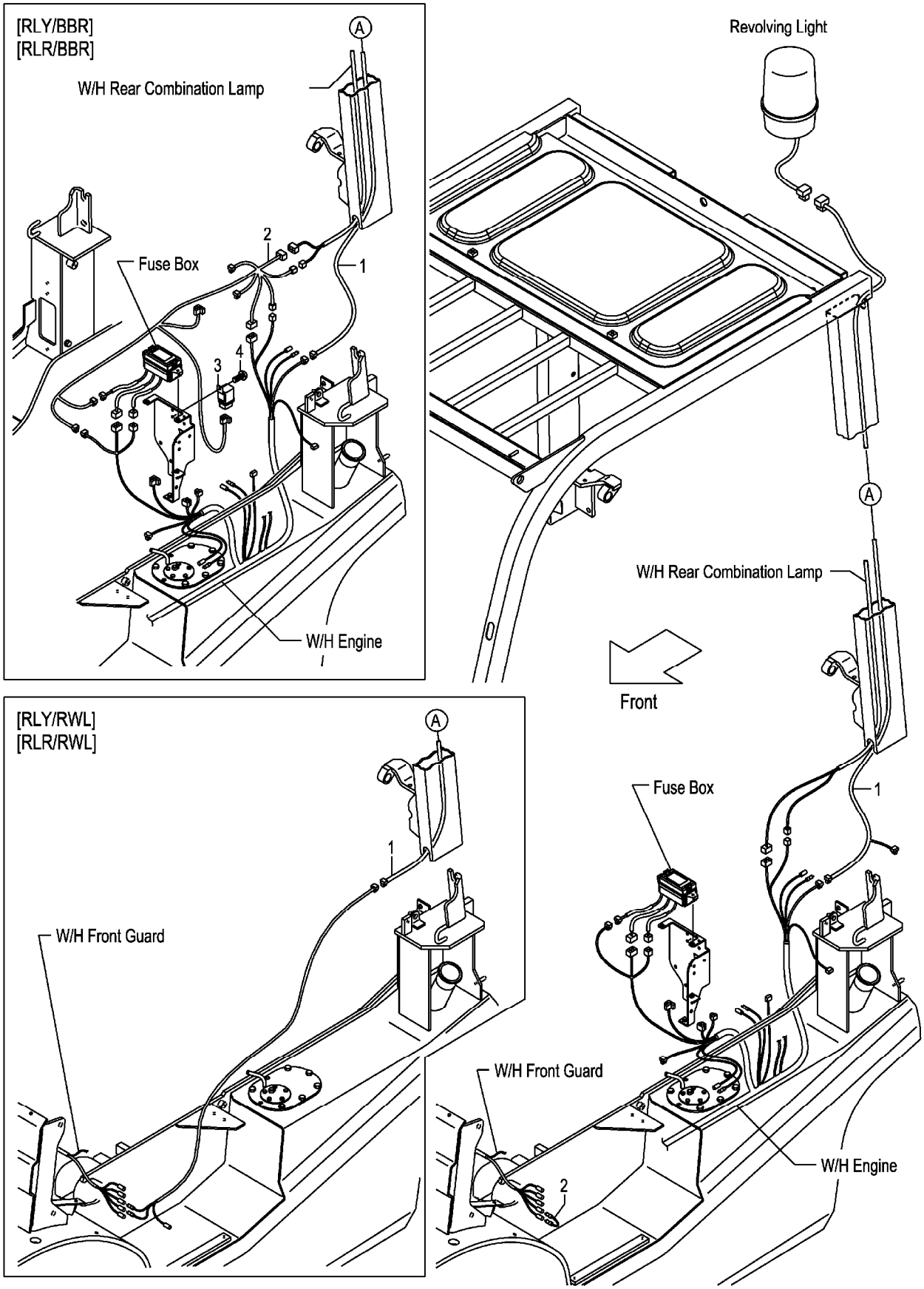

A:FG20C13 FG20T13 FG25C13 FG25T13 C:FD20C13 FD20T13 FD25C13 FD25T13 (F70224W0)
B:FG20C3 FG20T3 FG25C3 FG25T3 FG20W3 FG25W3 D:FD20C3 FD20T3 FD25C3 FD25T3 FD20W3 FD25W3

| Item No | Part No. | Mark | Description | | Req'd | Remarks : Serial No. |
|---|---|---|---|---|---|---|
| 1 | 52N58-92001 | | WIRE,LEAD | ﾜｲﾔ | 1 | [RLY][RLR] |
| - | 52N58-92021 | | WIRE,LEAD | ﾜｲﾔ | 1 | [RLY/BBR][RLR/BBR][RLY/RWL] [RLR/RWL] |
| 2 | 516G1-42211 | | WIRE,LEAD | ﾜｲﾔ | 1 | [RLY][RLR] |
| - | 52N58-92111 | | WIRE-HARNESS,BEARING | ﾜｲﾔﾊｰﾈｽ | 1 | [RLY/BBR][RLR/BBR] |
| - | 52N58-92041 | | WIRE,LEAD | ﾜｲﾔ | 1 | [RLY/RWL][RLR/RWL] |
| 3 | 26062-42881 | | RELAY,12V | ﾘﾚｰ | 1 | [RLY/BBR][RLR/BBR] |
| 4 | 214A2-42611 | | SCREW | ｽｸﾘｭ | 1 | [RLY/BBR][RLR/BBR] |

# FIG.55 BACK BUZZER

(F70224X0) ﾊﾞｯｸﾌﾞｻﾞｰ

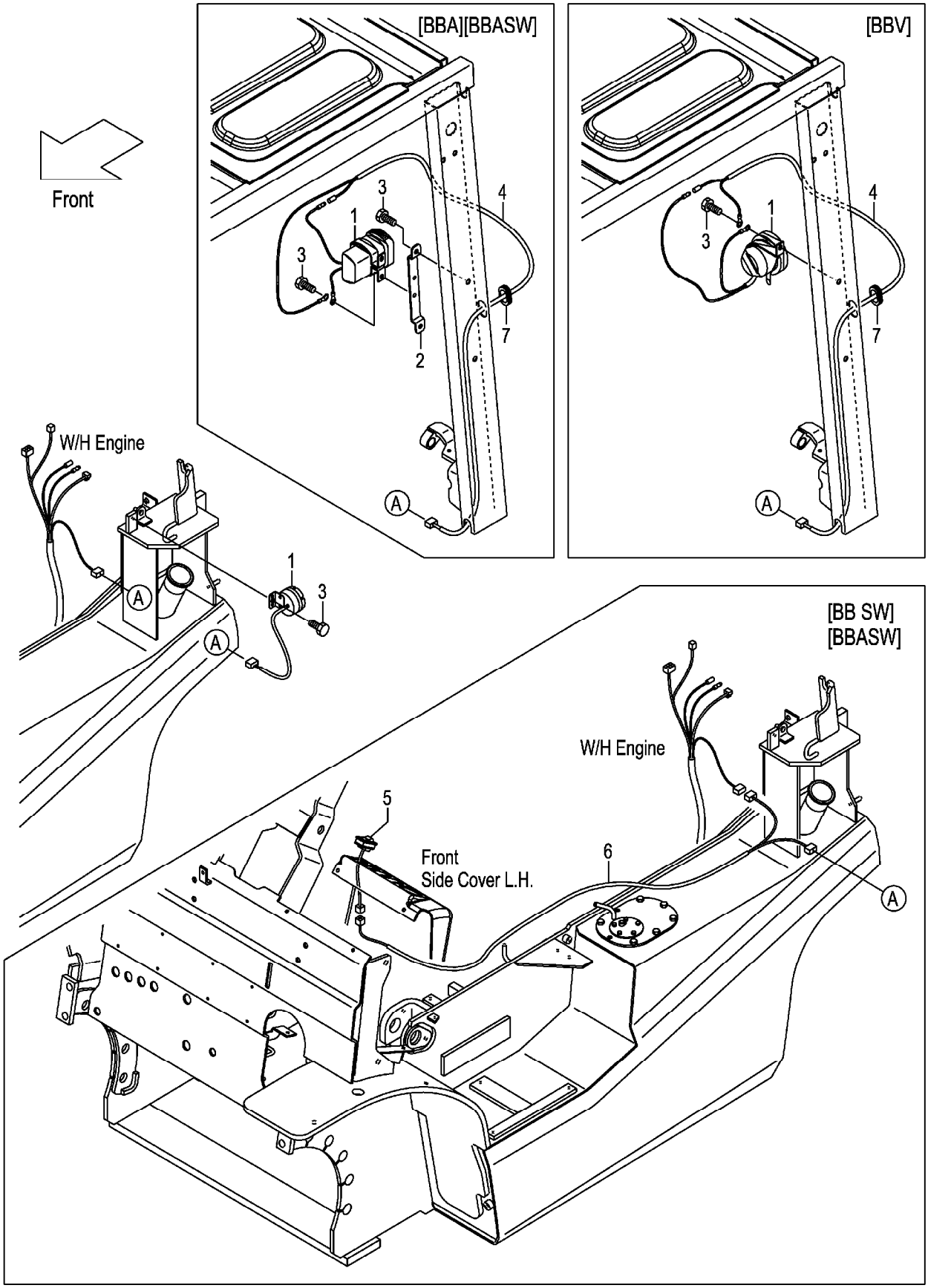

A:FG20C13 FG20T13 FG25C13 FG25T13 C:FD20C13 FD20T13 FD25C13 FD25T13 (F70224X0)
B:FG20C3 FG20T3 FG25C3 FG25T3 FG20W3 FG25W3 D:FD20C3 FD20T3 FD25C3 FD25T3 FD20W3 FD25W3

| Item No | Part No. | Mark | Description | | Req'd | Remarks : Serial No. |
|---|---|---|---|---|---|---|
| 1 | 234A2-42301 | | BUZZER,BACK,12V | ﾌﾞｻﾞｰ | 1 | |
| - | 214A2-44001 | | BUZZER,BACK,12V | ﾌﾞｻﾞｰ | 1 | [BBA][BBASW] |
| - | 52N51-30201 | | ALARM,VOICE | ｱﾗｰﾑ | 1 | [BBV] |
| 2 | 52N51-31001 | | BRACKET,BBA | ﾌﾞﾗｹｯﾄ | 1 | [BBA][BBASW] |
| 3 | 01185-08016 | | BOLT | ﾎﾞﾙﾄ | 1 | A,C:1-110<br>B:1-121<br>D:1-180 |
| - | 01183-08012 | | BOLT | ﾎﾞﾙﾄ | 1 | A,C:111-<br>B:122-<br>D:181- |
| - | 01183-08016 | | BOLT | ﾎﾞﾙﾄ | 4 | [BBA][BBASW] |
| - | 01183-08016 | | BOLT | ﾎﾞﾙﾄ | 1 | [BBV] |
| 4 | 52N51-32011 | | WIRE,LEAD,BBA | ﾜｲﾔ | 1 | [BBA][BBASW][BBV] |
| 5 | 52N51-32101 | | SWITCH,ON/OFF | ｽｲｯﾁ | 1 | [BB SW][BBASW] |
| 6 | 52N51-32001 | | WIRE,LEAD,BBSW | ﾜｲﾔ | 1 | [BB SW][BBASW] |
| 7 | 54315-32561 | | GROMMET | ｸﾞﾛﾒｯﾄ | 1 | A,C:111-<br>B:122-<br>D:181-<br>[BBA][BBASW][BBV] |

# FIG.56 HEATER UNIT [HR]

(F70224Y0) ヒータユニット

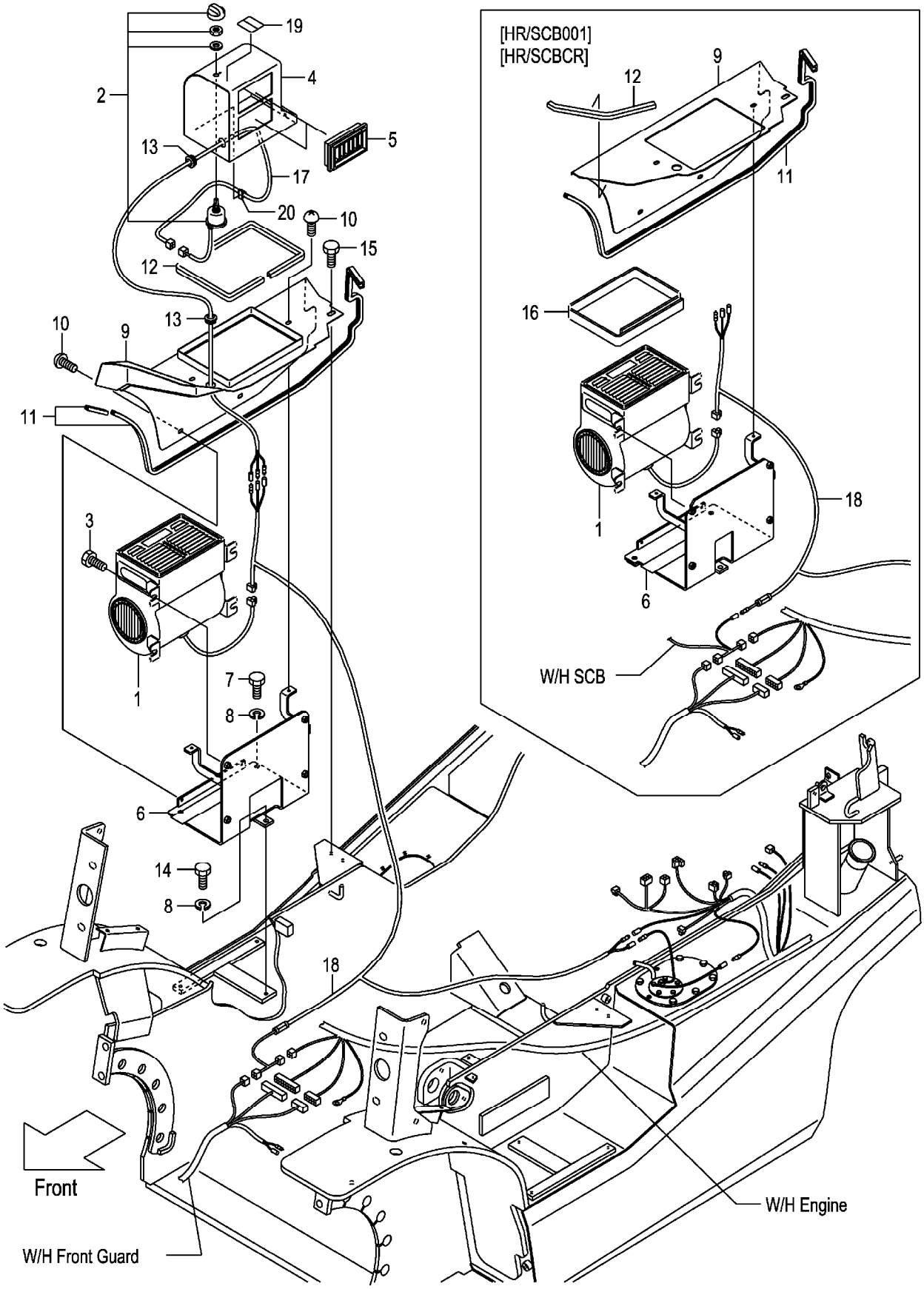

A:FG20C13 FG20T13 FG25C13 FG25T13 D:FD20C13 FD20T13 FD25C13 FD25T13
B:FG20C3 FG20T3 FG25C3 FG25T3 E:FD20C3 FD20T3 FD25C3 FD25T3
C:FG20W3 FG25W3 F:FD20W3 FD25W3

**FIG.56**
(F70224Y0)

| Item No | Part No. | Mark | Description | | Req'd | Remarks : Serial No. |
|---|---|---|---|---|---|---|
| 1 | 52N57-20301 | | UNIT,HEATER | ﾕﾆｯﾄ | 1 | [HR] |
| 2 | 52N57-20311 | | SWITCH,HEATER | ｽｲｯﾁ | 1 | [HR] |
| 3 | 01186-08020 | | BOLT | ﾎﾞﾙﾄ | 4 | [HR] |
| 4 | 52N57-20201 | | DUCT | ﾀﾞｸﾄ | 1 | [HR] |
| 5 | 25369-47031 | | GRILLE | ｸﾞﾘﾙ | 2 | [HR] |
| 6 | 52N57-20221 | | BRACKET,HEATER | ﾌﾞﾗｹｯﾄ | 1 | [HR] |
| - | 52N57-20521 | | BRACKET,HEATER | ﾌﾞﾗｹｯﾄ | 1 | B,C,E,F [HR/SCB001] |
| - | 52N57-20521 | | BRACKET,HEATER | ﾌﾞﾗｹｯﾄ | 1 | B,C,E [HR/SCBCR] |
| 7 | 01100-08020 | | BOLT | ﾎﾞﾙﾄ | 2 | [HR] |
| 8 | 02010-00008 | | WASHER | ﾜｯｼｬ | 3 | [HR] |
| 9 | 52N57-20211 | | COVER,HEATER | ｶﾊﾞｰ | 1 | [HR] |
| - | 52N57-22381 | | COVER,HEATER | ｶﾊﾞｰ | 1 | B,C,E,F [HR/SCB001] |
| - | 52N57-22381 | | COVER,HEATER | ｶﾊﾞｰ | 1 | B,C,E [HR/SCBCR] |
| 10 | 214A6-42252 | | SCREW | ｽｸﾘｭ | 4 | [HR] |
| 11 | 222A6-42381 | | EDGING | ｴｯｼﾞﾝｸﾞ | 1 | [HR] |
| 12 | 256C5-12631 | | SEAL,RUBBER | ｼｰﾙ | 1 | [HR] |
| - | 509S3-92261 | | SEAL,RUBBER | ｼｰﾙ | 1 | B,C,E,F [HR/SCB001] |
| - | 509S3-92261 | | SEAL,RUBBER | ｼｰﾙ | 1 | B,C,E [HR/SCBCR] |
| 13 | 221A2-42031 | | GROMMET | ｸﾞﾛﾒｯﾄ | 2 | [HR] |
| 14 | 01100-08016 | | BOLT | ﾎﾞﾙﾄ | 1 | [HR] |
| 15 | 01185-08016 | | BOLT | ﾎﾞﾙﾄ | 1 | [HR] |
| 16 | 57045-42141 | | RUBBER | ﾗﾊﾞｰ | 1 | B,C,E,F [HR/SCB001] |
| - | 57045-42141 | | RUBBER | ﾗﾊﾞｰ | 1 | B,C,E [HR/SCBCR] |
| 17 | 52N57-22231 | | WIRE-HARNESS,SWITCH | ﾜｲﾔﾊｰﾈｽ | 1 | [HR] |
| 18 | 52N57-22241 | | WIRE-HARNESS,HEATER | ﾜｲﾔﾊｰﾈｽ | 1 | [HR] |
| - | 52N57-22351 | | WIRE-HARNESS,HEATER | ﾜｲﾔﾊｰﾈｽ | 1 | B,C,E,F [HR/SCB001] |
| - | 52N57-22351 | | WIRE-HARNESS,HEATER | ﾜｲﾔﾊｰﾈｽ | 1 | B,C,E [HR/SCBCR] |
| 19 | 52N57-22341 | | DECAL,HEATER-SWITCH | ﾃﾞｶﾙ | 1 | [HR] |
| 20 | 27732-42311 | | CLAMP,HARNESS | ｸﾗﾝﾌﾟ | 1 | [HR] |

# FIG.57 HEATER VALVE & ELBOW [HR]

(F70224Z0) ﾋｰﾀﾊﾞﾙﾌﾞ&ｴﾙﾎﾞ

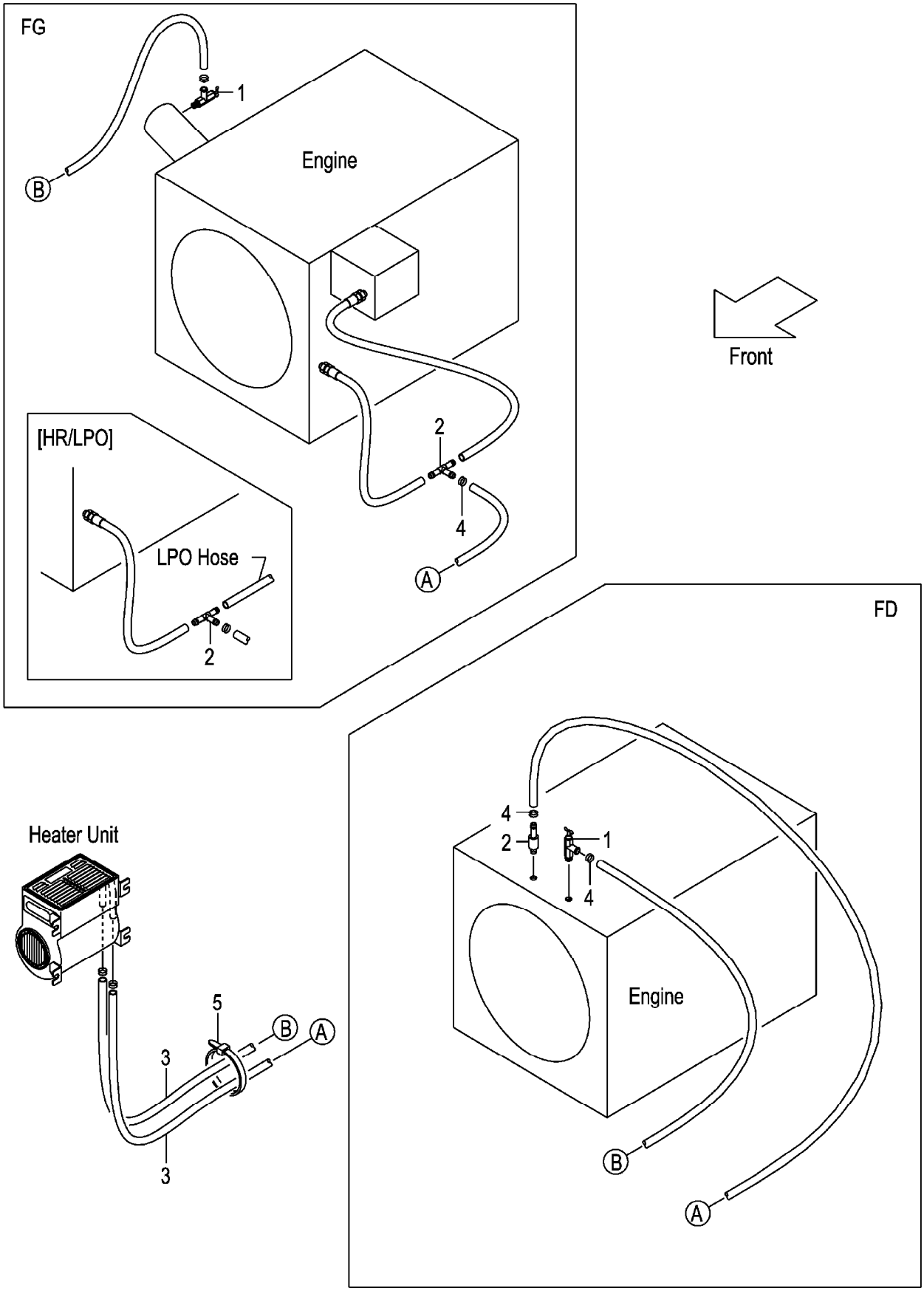

A:FG20C13 FG20T13 FG25C13 FG25T13 C:FD20C13 FD20T13 FD25C13 FD25T13
B:FG20C3 FG20T3 FG25C3 FG25T3 FG20W3 FG25W3 D:FD20C3 FD20T3 FD25C3 FD25T3 FD20W3 FD25W3

| Item No | Part No. | Mark | Description | | Req'd | Remarks : Serial No. |
|---|---|---|---|---|---|---|
| 1 | 56110-63521 | | VALVE,WATER | ﾊﾞﾙﾌﾞ | 1 | [HR] |
| 2 | 23679-45051 | | THREE-WAY | ｽﾘｰｳｴｲ | 1 | A,B |
| | | | | | | [HR] |
| - | 529F7-22001 | | ADAPTER | ｱﾀﾞﾌﾟﾀ | 1 | C,D |
| | | | | | | [HR] |
| - | 516G7-22001 | | THREE-WAY | ｽﾘｰｳｴｲ | 1 | A,B |
| | | | | | | [HR/LPO] |
| 3 | 522A7-22011 | | HOSE,WATER | ﾎｰｽ | 2 | [HR] |
| 4 | 04911-00022 | | CLIP | ｸﾘｯﾌﾟ | 4 | [HR] |
| 5 | 04913-11200 | | BAND | ﾊﾞﾝﾄﾞ | 10 | [HR] |

# FIG.58 DRIVE UNIT MOUNT (CLUTCH)

(F7022510) ﾄﾞﾗｲﾌﾞﾕﾆｯﾄﾏｳﾝﾄ

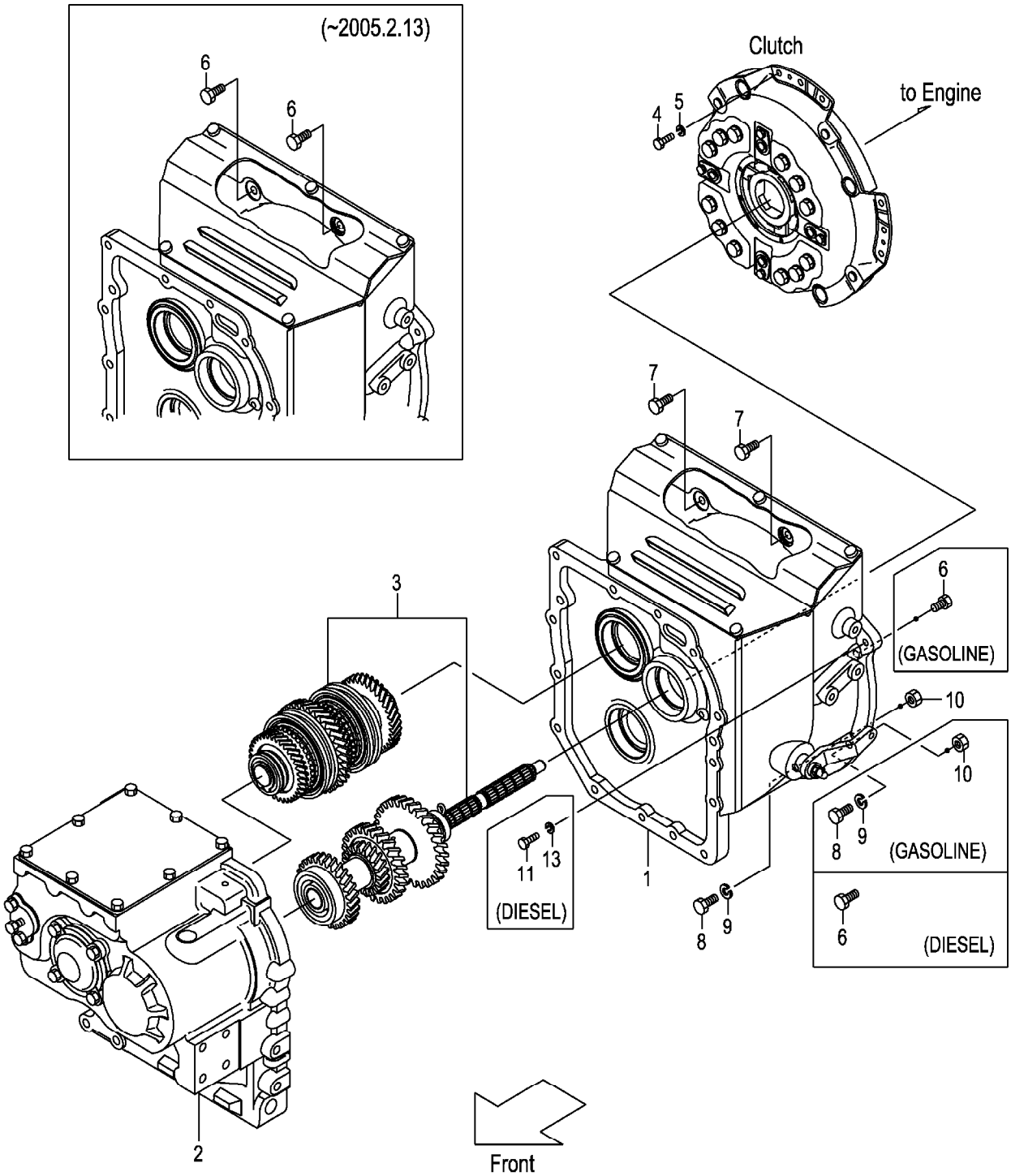

A:FG20C13 FG25C13 C:FD20C13 FD25C13
B:FG20C3 FG25C3 D:FD20C3 FD25C3

| Item No | Part No. | Mark | Description | | Req'd | Remarks : Serial No. |
|---|---|---|---|---|---|---|
| A1 | 10A62-50201 | | UNIT-ASSY,DRIVE | ﾄﾞﾗｲﾌﾞﾕﾆｯﾄｱｯｾﾝ | 1 | A,C<br>INC.1-3 |
| - | 12N42-50201 | | UNIT-ASSY,DRIVE | ﾄﾞﾗｲﾌﾞﾕﾆｯﾄｱｯｾﾝ | 1 | B,D<br>INC.1-3 |
| - | 10A62-50401 | | UNIT-ASSY,DRIVE | ﾄﾞﾗｲﾌﾞﾕﾆｯﾄｱｯｾﾝ | 1 | A,C<br>[PC] INC.1-3 |
| - | 12N42-50401 | | UNIT-ASSY,DRIVE | ﾄﾞﾗｲﾌﾞﾕﾆｯﾄｱｯｾﾝ | 1 | B,D<br>[PC] INC.1-3 |
| 1 | NO PART NO. | | CLUTCH | ｸﾗｯﾁ | 1 | SEE FIG.62:1-17 |
| - | NO PART NO. | | CLUTCH | ｸﾗｯﾁ | 1 | [PC]SEE FIG.62:1-17 |
| 2 | NO PART NO. | | CASE,T/M | ｹｰｽ | 1 | SEE FIG.63 |
| 3 | NO PART NO. | | GEAR,T/M | ｷﾞﾔｰ | 1 | A,C<br>SEE FIG.64 |
| - | NO PART NO. | | GEAR,T/M | ｷﾞﾔｰ | 1 | B,D<br>SEE FIG.64 |
| 4 | 01103-08016 | | BOLT | ﾎﾞﾙﾄ | 12 | |
| 5 | 02011-00008 | | WASHER | ﾜｯｼｬ | 12 | |
| 6 | 01183-10035 | | BOLT | ﾎﾞﾙﾄ | 3 | A,B<br>(-2005.2.13) |
| - | 01183-10035 | | BOLT | ﾎﾞﾙﾄ | 1 | A,B<br>(2005.2.14-) |
| - | 01183-10035 | | BOLT | ﾎﾞﾙﾄ | 3 | C,D<br>(-2005.2.13) |
| - | 01183-10035 | | BOLT | ﾎﾞﾙﾄ | 1 | C,D<br>(2005.2.14-) |
| 7 | 01183-10030 | | BOLT | ﾎﾞﾙﾄ | 2 | A,B<br>(2005.2.14-) |
| - | 01183-10030 | | BOLT | ﾎﾞﾙﾄ | 2 | C,D<br>(2005.2.14-) |
| 8 | 01100-10050 | | BOLT | ﾎﾞﾙﾄ | 5 | A,B |
| - | 01100-10050 | | BOLT | ﾎﾞﾙﾄ | 4 | C,D |
| 9 | 02010-00010 | | WASHER | ﾜｯｼｬ | 5 | A,B |
| - | 02010-00010 | | WASHER | ﾜｯｼｬ | 4 | C,D |
| 10 | 01400-00010 | | NUT | ﾅｯﾄ | 5 | A,B |
| - | 01400-00010 | | NUT | ﾅｯﾄ | 4 | C,D |
| 11 | 01103-08040 | | BOLT | ﾎﾞﾙﾄ | 1 | C:1-125<br>D:1-505 |
| - | 01103-08035 | | BOLT | ﾎﾞﾙﾄ | 1 | C:126-<br>D:506- |
| 12 | 01103-08040 | + | BOLT | ﾎﾞﾙﾄ | 1 | C,D |
| 13 | 02010-00008 | | WASHER | ﾜｯｼｬ | 2 | C,D |

# FIG.59 DRIVE UNIT MOUNT (TOR-CON)

(F7022520) ﾄﾞﾗｲﾌﾞﾕﾆｯﾄﾏｳﾝﾄ

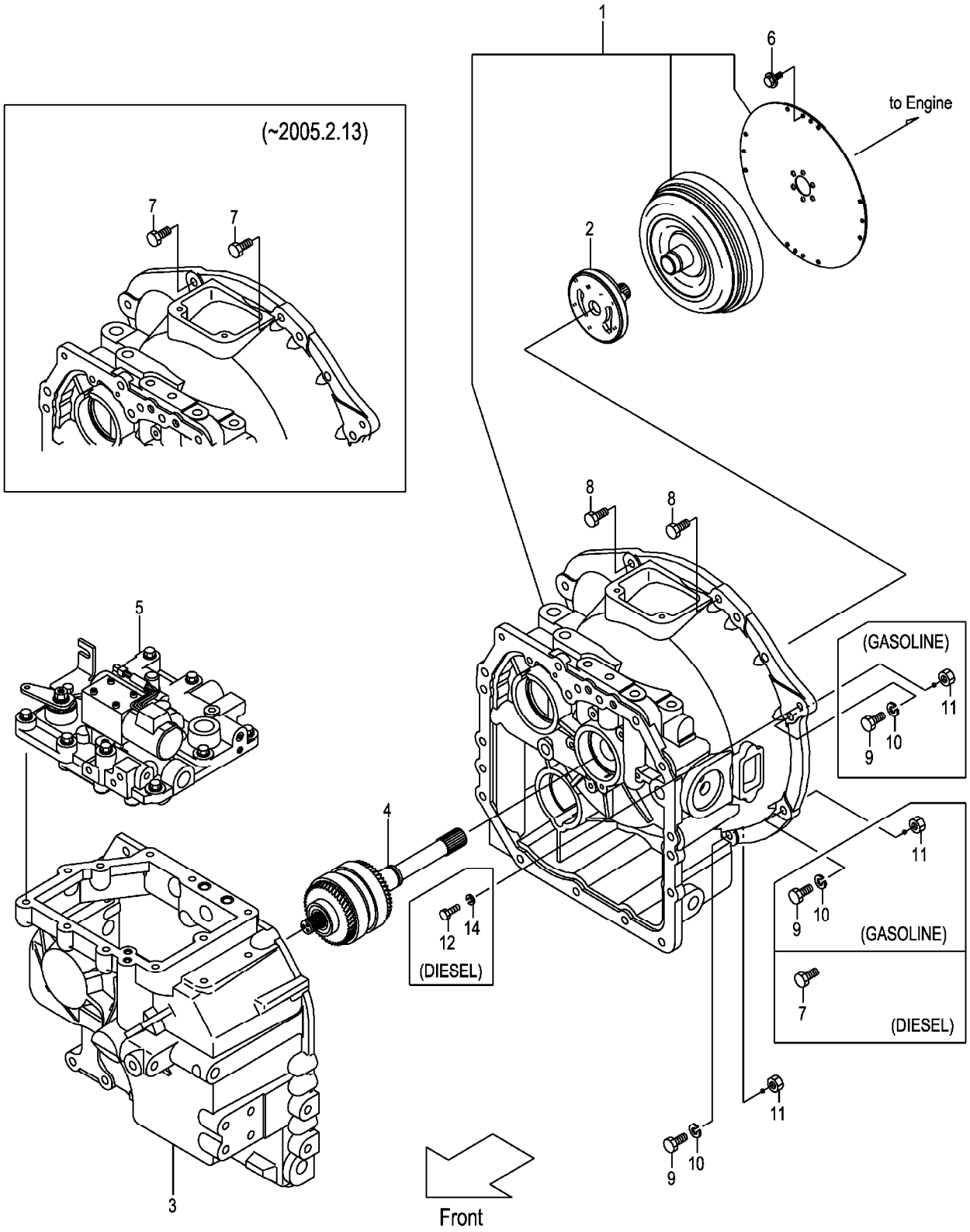

A:FG20T13 FG25T13 C:FD20T13 FD25T13
B:FG20T3 FG25T3 D:FD20T3 FD25T3

| Item No | Part No. | Mark | Description | | Req'd | Remarks : Serial No. |
|---|---|---|---|---|---|---|
| A1 | 12N52-50201 | | UNIT-ASSY,DRIVE | ﾄﾞﾗｲﾌﾞﾕﾆｯﾄｱｯｾﾝ | 1 | INC.1-5 |
| 1 | NO PART NO. | | CASE,T/C | ｹｰｽ | 1 | SEE FIG.65 |
| 2 | NO PART NO. | | PUMP | ﾎﾟﾝﾌﾟ | 1 | SEE FIG.66 |
| 3 | NO PART NO. | | CASE,T/M | ｹｰｽ | 1 | SEE FIG.67 |
| 4 | NO PART NO. | | PACK,CLUTCH | ﾊﾟｯｸ | 1 | SEE FIG.68 |
| 5 | NO PART NO. | | VALVE,CONTROL | ﾊﾞﾙﾌﾞ | 1 | SEE FIG.69 |
| 6 | 12N53-82621 | | BOLT,FLANGE | ﾎﾞﾙﾄ | 12 | |
| 7 | 01183-10035 | | BOLT | ﾎﾞﾙﾄ | 2 | A,B |
| | | | | | | (-2005.2.13) |
| - | 01183-10035 | | BOLT | ﾎﾞﾙﾄ | 3 | C,D |
| | | | | | | (-2005.2.13) |
| - | 01183-10035 | | BOLT | ﾎﾞﾙﾄ | 1 | C,D |
| | | | | | | (2005.2.14-) |
| 8 | 01183-10030 | | BOLT | ﾎﾞﾙﾄ | 2 | A,B |
| | | | | | | (2005.2.14-) |
| - | 01183-10030 | | BOLT | ﾎﾞﾙﾄ | 2 | C,D |
| | | | | | | (2005.2.14-) |
| 9 | 01100-10050 | | BOLT | ﾎﾞﾙﾄ | 6 | A,B |
| - | 01100-10050 | | BOLT | ﾎﾞﾙﾄ | 4 | C,D |
| 10 | 02010-00010 | | WASHER | ﾜｯｼｬ | 6 | A,B |
| - | 02010-00010 | | WASHER | ﾜｯｼｬ | 4 | C,D |
| 11 | 01400-00010 | | NUT | ﾅｯﾄ | 6 | A,B |
| - | 01400-00010 | | NUT | ﾅｯﾄ | 4 | C,D |
| 12 | 01103-08040 | | BOLT | ﾎﾞﾙﾄ | 2 | C:1-125 |
| | | | | | | D:1-505 |
| - | 01103-08035 | | BOLT | ﾎﾞﾙﾄ | 1 | C:126- |
| | | | | | | D:506- |
| 13 | 01103-08040 | + | BOLT | ﾎﾞﾙﾄ | 1 | C,D |
| 14 | 02010-00008 | | WASHER | ﾜｯｼｬ | 2 | C,D |

# FIG.60 DRIVE UNIT MOUNT (OIL CLUTCH)

(F7022530) ﾄﾞﾗｲﾌﾞﾕﾆｯﾄﾏｳﾝﾄ

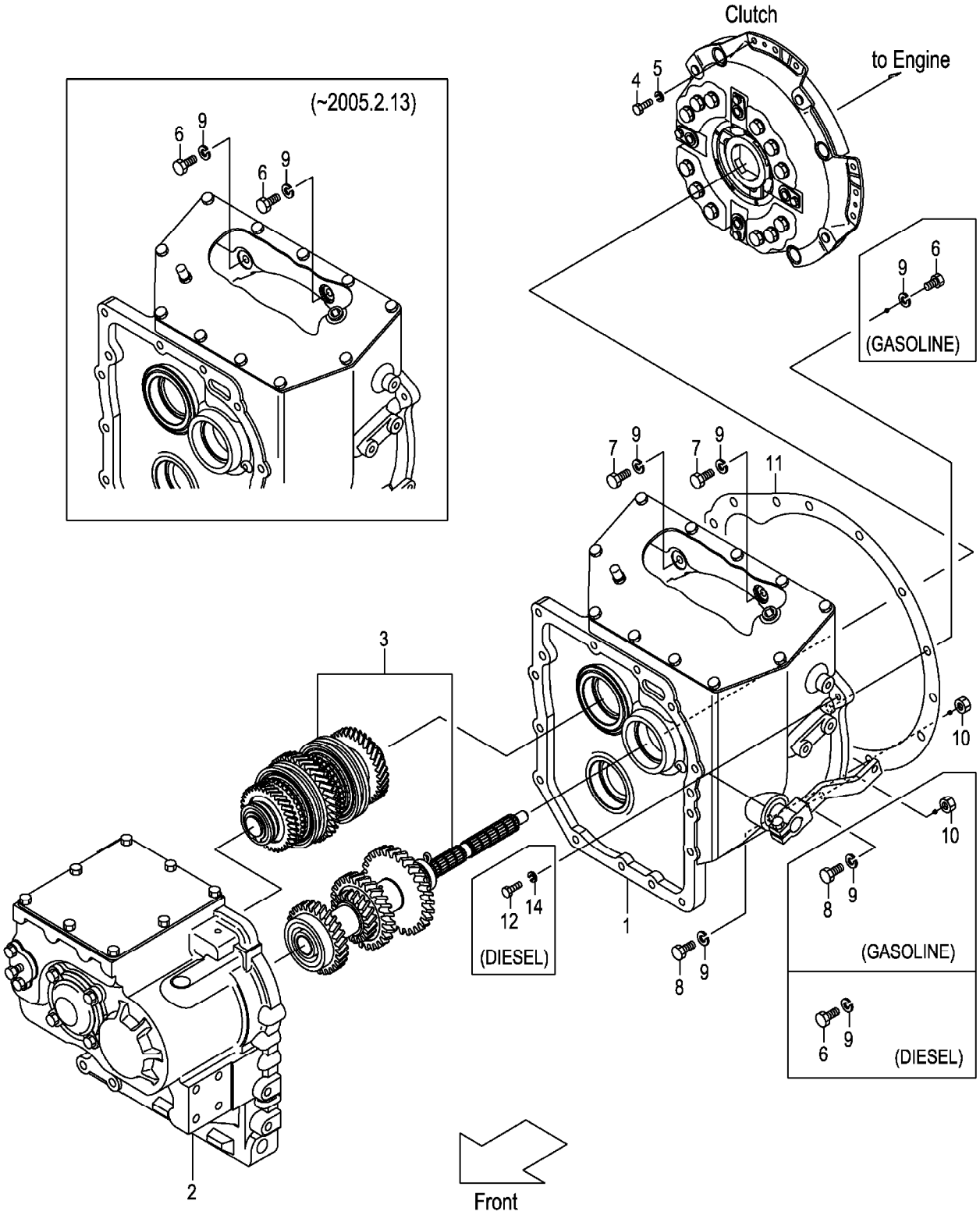

A:FG20W3 FG25W3
B:FD20W3 FD25W3

| Item No | Part No. | Mark | Description | | Req'd | Remarks : Serial No. |
|---|---|---|---|---|---|---|
| A1 | 12P42-50201 | | UNIT-ASSY,DRIVE | ﾄﾞﾗｲﾌﾞﾕﾆｯﾄｱｯｾﾝ | 1 | INC.1-3 |
| 1 | NO PART NO. | | CLUTCH | ｸﾗｯﾁ | 1 | SEE FIG.70:1-28 |
| 2 | NO PART NO. | | CASE,T/M | ｹｰｽ | 1 | SEE FIG.63 |
| 3 | NO PART NO. | | GEAR,T/M | ｷﾞﾔｰ | 1 | SEE FIG.64 |
| 4 | 01103-08016 | | BOLT | ﾎﾞﾙﾄ | 12 | |
| 5 | 02011-00008 | | WASHER | ﾜｯｼｬ | 12 | |
| 6 | 01103-10035 | | BOLT | ﾎﾞﾙﾄ | 3 | A (-2005.2.13) |
| - | 01103-10035 | | BOLT | ﾎﾞﾙﾄ | 1 | A (2005.2.14-) |
| - | 01103-10035 | | BOLT | ﾎﾞﾙﾄ | 3 | B (-2005.2.13) |
| - | 01103-10035 | | BOLT | ﾎﾞﾙﾄ | 1 | B (2005.2.14-) |
| 7 | 01103-10030 | | BOLT | ﾎﾞﾙﾄ | 2 | A (2005.2.14-) |
| - | 01103-10030 | | BOLT | ﾎﾞﾙﾄ | 2 | B (2005.2.14-) |
| 8 | 01100-10050 | | BOLT | ﾎﾞﾙﾄ | 5 | A |
| - | 01100-10050 | | BOLT | ﾎﾞﾙﾄ | 4 | B |
| 9 | 02010-00010 | | WASHER | ﾜｯｼｬ | 8 | A |
| - | 02010-00010 | | WASHER | ﾜｯｼｬ | 7 | B |
| 10 | 01400-00010 | | NUT | ﾅｯﾄ | 5 | A |
| - | 01400-00010 | | NUT | ﾅｯﾄ | 4 | B |
| 11 | 213L2-52001 | | GASKET | ｶﾞｽｹｯﾄ | 1 | A |
| - | 242S2-52001 | | GASKET | ｶﾞｽｹｯﾄ | 1 | B |
| 12 | 01103-08040 | | BOLT | ﾎﾞﾙﾄ | 2 | B:1-505 |
| - | 01103-08035 | | BOLT | ﾎﾞﾙﾄ | 1 | B:506- |
| 13 | 01103-08040 | + | BOLT | ﾎﾞﾙﾄ | 1 | B |
| 14 | 02010-00008 | | WASHER | ﾜｯｼｬ | 2 | B |

# FIG.61 CHANGE LEVER (CLUTCH)(OIL CLUTCH)

(F7022540) チェンジレバー

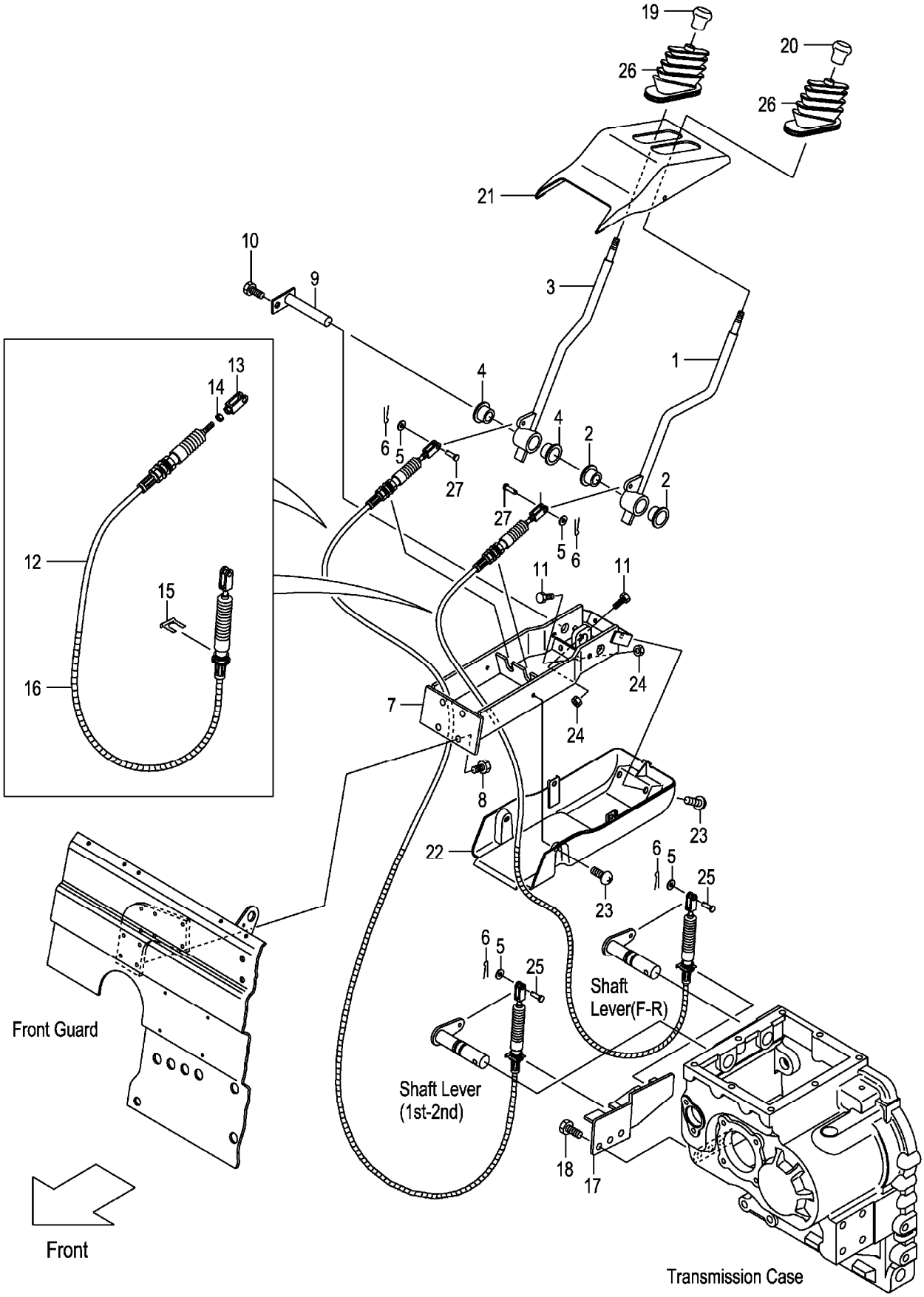

A:FG20C13 FG25C13 C:FD20C13 FD25C13
B:FG20C3 FG25C3 FG20W3 FG25W3 D:FD20C3 FD25C3 FD20W3 FD25W3

| Item No | Part No. | Mark | Description | | Req'd | Remarks : Serial No. |
|---|---|---|---|---|---|---|
| A1 | 22N43-90201 | | LEVER-ASSY,DIRECTION | ﾃﾞｨﾚｸｼｮﾝﾚﾊﾞｰｱｯｾﾝ | 1 | INC.1,2 |
| 1 | NO PART NO. | # | LEVER,DIRECTION | ﾚﾊﾞｰ | 1 | |
| 2 | 214A7-42071 | | BUSHING | ﾌﾞｯｼﾝｸﾞ | 2 | |
| A2 | 22N43-90211 | | LEVER-ASSY,SPEED | ｽﾋﾟｰﾄﾞﾚﾊﾞｰｱｯｾﾝ | 1 | INC.3,4 |
| 3 | NO PART NO. | # | LEVER,SPEED | ﾚﾊﾞｰ | 1 | |
| 4 | 214A7-42071 | | BUSHING | ﾌﾞｯｼﾝｸﾞ | 2 | |
| 5 | 02000-00006 | | WASHER | ﾜｯｼｬ | 4 | |
| 6 | 02200-16010 | | PIN,COTTER | ﾋﾟﾝ | 4 | |
| 7 | 22N43-90301 | | BRACKET | ﾌﾞﾗｹｯﾄ | 1 | |
| 8 | 01185-08020 | | BOLT | ﾎﾞﾙﾄ | 4 | |
| 9 | 22N43-92201 | | SHAFT | ｼｬﾌﾄ | 1 | |
| 10 | 01183-08012 | | BOLT | ﾎﾞﾙﾄ | 1 | |
| 11 | 01100-08025 | | BOLT | ﾎﾞﾙﾄ | 4 | |
| A3 | 22N43-90511 | | CABLE-ASSY | ｹｰﾌﾞﾙｱｯｾﾝ | 2 | INC.12-16 |
| 12 | 22N43-93001 | | CABLE | ｹｰﾌﾞﾙ | 2 | |
| 13 | 22N43-93021 | | END | ｴﾝﾄﾞ | 2 | |
| 14 | 01402-00006 | | NUT | ﾅｯﾄ | 2 | |
| 15 | 22N43-93011 | | CLAMP | ｸﾗﾝﾌﾟ | 2 | |
| 16 | 22N43-93031 | | PROTECTOR | ﾌﾟﾛﾃｸﾀ | 2 | |
| 17 | 22N43-92301 | | BRACKET | ﾌﾞﾗｹｯﾄ | 1 | |
| 18 | 01213-10025 | | BOLT | ﾎﾞﾙﾄ | 3 | |
| 19 | 214A2-52002 | | KNOB,SPEED | ﾉﾌﾞ | 1 | |
| 20 | 214A2-52012 | | KNOB,DIRECTION | ﾉﾌﾞ | 1 | |
| 21 | 22N43-92701 | + | COVER,LH | ｶﾊﾞｰ | 1 | A,C:1-109<br>B,D:1-110 |
| - | 22N43-92901 | | COVER,UPPER | ｶﾊﾞｰ | 1 | A,C:110-<br>B,D:111- |
| 22 | 22N43-92711 | + | COVER,RH | ｶﾊﾞｰ | 1 | A,C:1-109<br>B,D:1-110 |
| - | 22N43-92911 | | COVER,UNDER | ｶﾊﾞｰ | 1 | A,C:110-<br>B,D:111- |
| 23 | 01033-06012 | | SCREW | ｽｸﾘｭ | 4 | A,C:1-110<br>B:1-121<br>D:1-180 |
| - | 225R6-42031 | | SCREW | ｽｸﾘｭ | 4 | A,C:111-<br>B:122-<br>D:181- |
| 24 | 01402-00008 | | NUT | ﾅｯﾄ | 4 | |
| 25 | 02262-06015 | | PIN,CLEVIS | ﾋﾟﾝ | 2 | |
| 26 | 22N43-92731 | | BOOT | ﾌﾞｰﾂ | 2 | |
| 27 | 02262-06020 | | PIN,CLEVIS | ﾋﾟﾝ | 2 | |

# FIG.62 CLUTCH (CLUTCH)

(F7022550) クラッチ

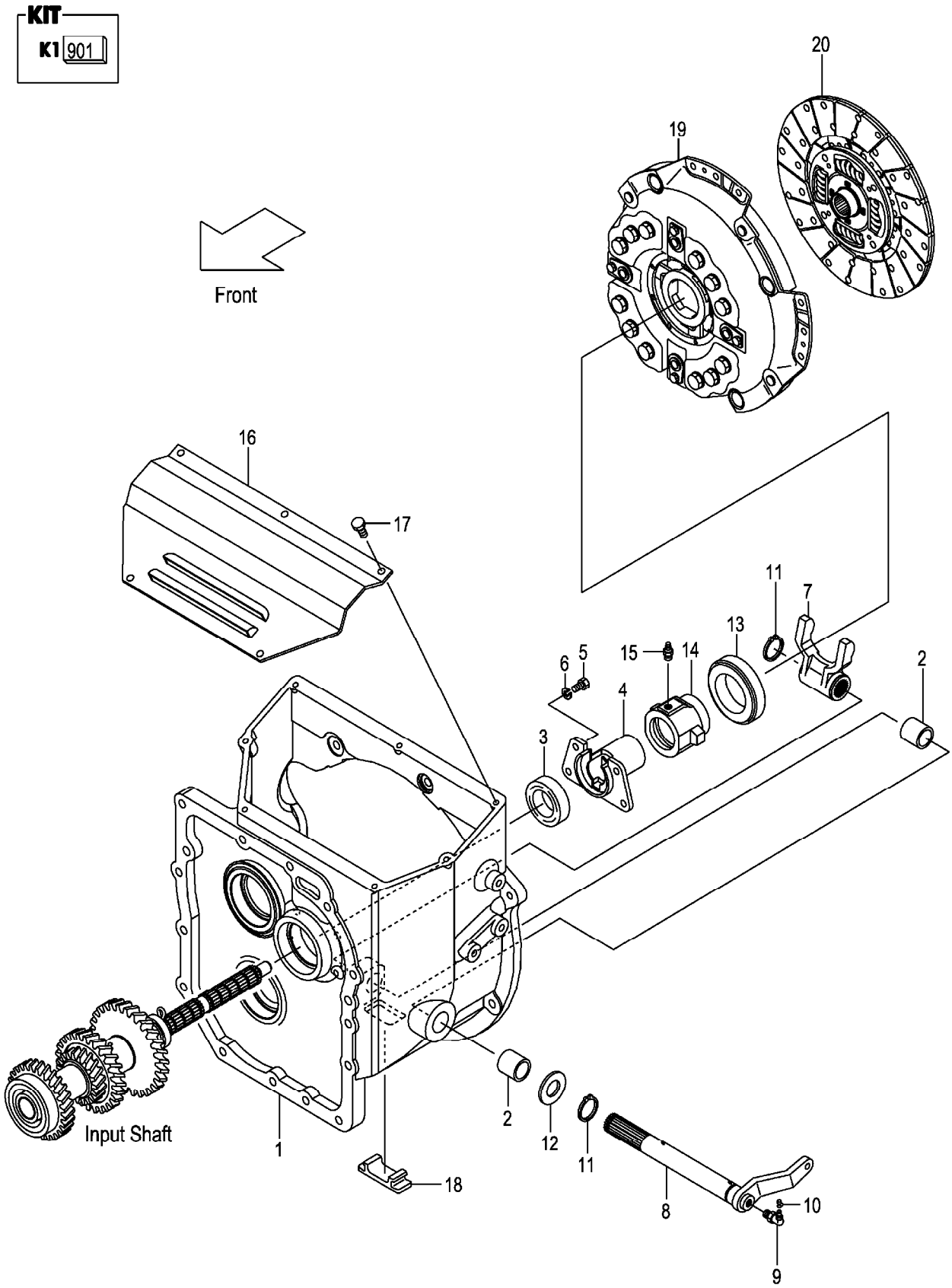

A:FG20C13 FG25C13 C:FD20C13 FD25C13
B:FG20C3 FG25C3 D:FD20C3 FD25C3

| Item No | Part No. | Mark | Description | | Req'd | Remarks : Serial No. |
|---|---|---|---|---|---|---|
| 901 | 12N43-19801 | K1 | KIT,REPAIR,T/M | ﾘﾍﾟｱｷｯﾄ | 1 | INC.3,11,FIG.64:3,5,13, 17,19,27,28,30 |
| 1 | 12N43-12001 | | HOUSING,CLUTCH | ﾊｳｼﾞﾝｸﾞ | 1 | |
| 2 | 12003-12021 | | BUSHING | ﾌﾞｯｼﾝｸﾞ | 2 | |
| 3 | 12N43-12011 | * | SEAL,OIL | ｼｰﾙ | 1 | |
| 4 | 12N43-12021 | | SUPPORT,RETAINER | ｻﾎﾟｰﾄ | 1 | |
| 5 | 01103-08016 | | BOLT | ﾎﾞﾙﾄ | 4 | |
| 6 | 02011-00008 | | WASHER | ﾜｯｼｬ | 4 | |
| 7 | 12N43-12101 | | YOKE | ﾖｰｸ | 1 | |
| 8 | 12N43-12111 | | SHAFT | ｼｬﾌﾄ | 1 | |
| - | 52N42-12001 | | SHAFT | ｼｬﾌﾄ | 1 | [PC] |
| 9 | 04901-00190 | | FITTING | ﾌｨｯﾃｨﾝｸﾞ | 1 | |
| 10 | 22199-12401 | | CAP,NIPPLE | ｷｬｯﾌﾟ | 1 | |
| 11 | 02100-00025 | * | RING,SNAP | ｽﾅｯﾌﾟﾘﾝｸﾞ | 2 | |
| 12 | 02000-00024 | | WASHER | ﾜｯｼｬ | 1 | |
| 13 | 135C3-12081 | | BEARING,THRUST | ﾍﾞｱﾘﾝｸﾞ | 1 | |
| 14 | 12N43-12201 | | RETAINER,BEARING | ﾘﾃｰﾅ | 1 | |
| 15 | 04901-00100 | | FITTING | ﾌｨｯﾃｨﾝｸﾞ | 1 | |
| 16 | 12N43-12151 | | COVER,CLUTCH-HOUSING | ｶﾊﾞｰ | 1 | |
| 17 | 01183-08016 | | BOLT | ﾎﾞﾙﾄ | 5 | |
| 18 | 12N53-82061 | | COVER,UNDER | ｶﾊﾞｰ | 1 | |
| 19 | 12N43-10201 | | COVER,CLUTCH | ｶﾊﾞｰ | 1 | |
| 20 | 10A63-10211 | | DISK,CLUTCH | ﾃﾞｨｽｸ | 1 | A,B |
| - | 12N43-10211 | | DISK,CLUTCH | ﾃﾞｨｽｸ | 1 | C,D |

# FIG.63 MISSION CASE (CLUTCH)(OIL CLUTCH)

(F7022560) ミッションケース

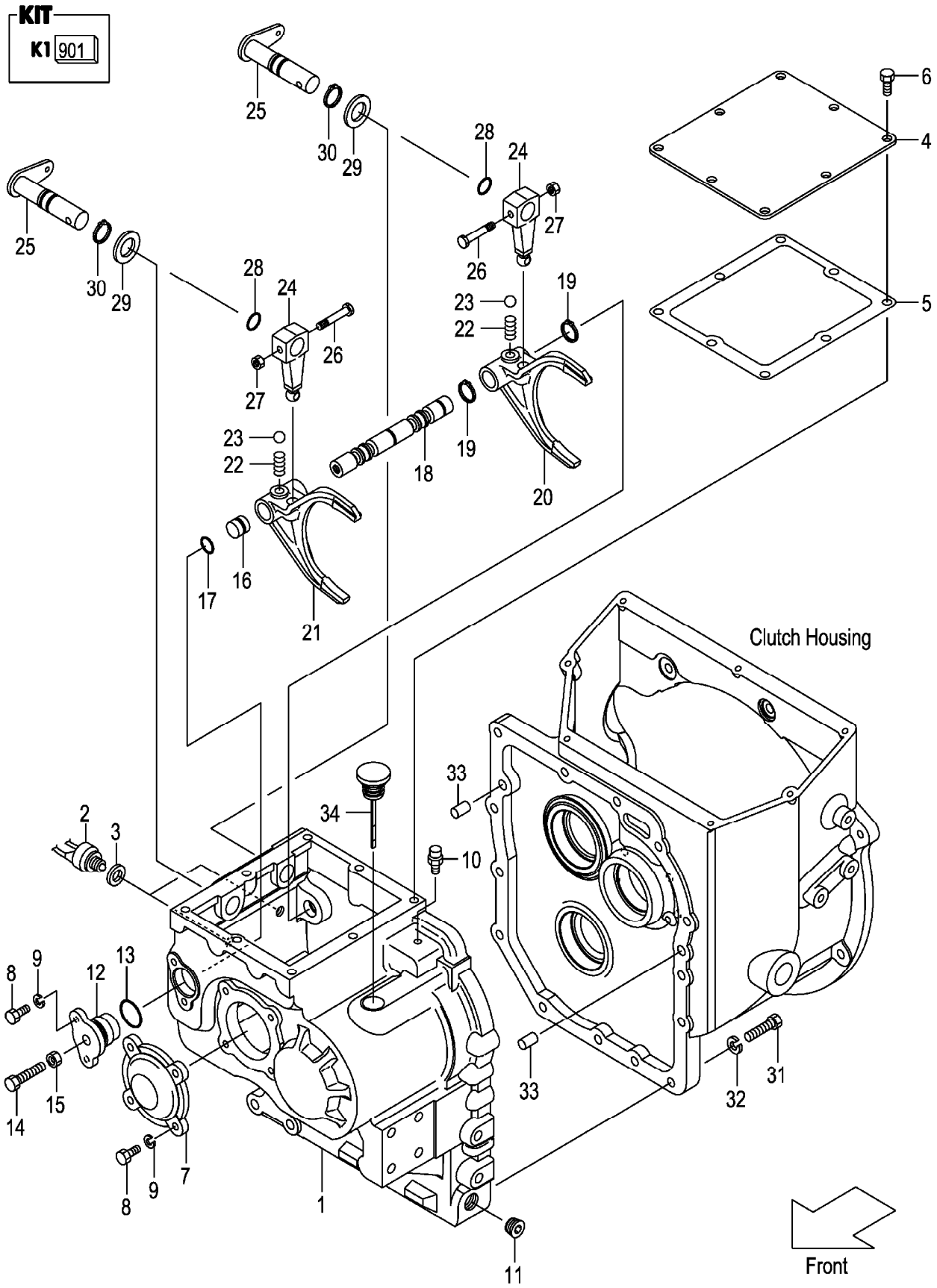

A:FG20C13 FG25C13 C:FD20C13 FD25C13
B:FG20C3 FG25C3 FG20W3 FG25W3 D:FD20C3 FD25C3 FD20W3 FD25W3

(F7022560)

| Item No | Part No. | Mark | Description | | Req'd | Remarks : Serial No. |
|---|---|---|---|---|---|---|
| 901 | 12N43-19811 | K1 | KIT,REPAIR,SHIFT-ROD | ﾘﾍﾟｱｷｯﾄ | 1 | INC.3,5,13,17,19,27,28,30 |
| 1 | 12N43-42001 | | CASE,T/M | ｹｰｽ | 1 | |
| 2 | 12003-42451 | | SWITCH,BACK-LAMP | ｽｲｯﾁ | 2 | |
| 3 | 12003-42461 | * | PACKING,BACK-LAMP | ﾊﾟｯｷﾝｸﾞ | 2 | |
| 4 | 12N43-42511 | | COVER,CASE | ｶﾊﾞｰ | 1 | |
| 5 | 12N43-42521 | * | GASKET,CASE-COVER | ｶﾞｽｹｯﾄ | 1 | |
| 6 | 01184-10016 | | BOLT | ﾎﾞﾙﾄ | 8 | |
| 7 | 12N43-42031 | | COVER,BEARING | ｶﾊﾞｰ | 1 | |
| 8 | 01103-08020 | | BOLT | ﾎﾞﾙﾄ | 6 | |
| 9 | 02011-00008 | | WASHER | ﾜｯｼｬ | 6 | |
| 10 | 15573-42151 | | BREATHER,AIR | ﾌﾞﾘｰｻﾞ | 1 | |
| 11 | 12163-82541 | | PLUG | ﾌﾟﾗｸﾞ | 1 | |
| 12 | 12003-42052 | | SUPPORT,ARM-SHAFT | ｻﾎﾟｰﾄ | 1 | |
| 13 | 03310-00300 | * | O-RING | Oﾘﾝｸﾞ | 1 | |
| 14 | 01123-10045 | | BOLT | ﾎﾞﾙﾄ | 1 | |
| 15 | 01400-00010 | | NUT | ﾅｯﾄ | 1 | |
| 16 | 12003-42061 | | SPACER | ｽﾍﾟｰｻ | 1 | |
| 17 | 03300-00160 | * | O-RING | Oﾘﾝｸﾞ | 1 | |
| 18 | 12N43-42401 | | ROD,SHIFT | ﾛｯﾄﾞ | 1 | |
| 19 | 02100-00020 | * | RING,SNAP | ｽﾅｯﾌﾟﾘﾝｸﾞ | 2 | |
| 20 | 12N43-42411 | | FORK,SHIFT,F-R | ﾌｫｰｸ | 1 | |
| 21 | 12N43-42421 | | FORK,SHIFT,H-L | ﾌｫｰｸ | 1 | |
| 22 | 12N43-42481 | | SPRING | ｽﾌﾟﾘﾝｸﾞ | 2 | |
| 23 | 03190-00013 | | BALL,STEEL | ﾎﾞｰﾙ | 2 | |
| 24 | 12N43-42431 | | ARM,SHIFT | ｱｰﾑ | 2 | |
| 25 | 12N43-42441 | | LEVER,SHIFT | ﾚﾊﾞｰ | 2 | |
| 26 | 12N43-42471 | | BOLT | ﾎﾞﾙﾄ | 2 | |
| 27 | 23652-12051 | * | NUT | ﾅｯﾄ | 2 | |
| 28 | 03300-00180 | * | O-RING | Oﾘﾝｸﾞ | 2 | |
| 29 | 02000-00022 | | WASHER | ﾜｯｼｬ | 2 | |
| 30 | 02100-00022 | * | RING,SNAP | ｽﾅｯﾌﾟﾘﾝｸﾞ | 2 | |
| 31 | 01103-10040 | | BOLT | ﾎﾞﾙﾄ | 14 | |
| 32 | 02011-00010 | | WASHER | ﾜｯｼｬ | 14 | |
| 33 | 02212-12020 | | PIN,PARALLEL | ﾋﾟﾝ | 2 | |
| 34 | 12N43-42501 | | GAUGE,LEVEL | ｹﾞｰｼﾞ | 1 | |

# FIG.64 MISSION GEAR (CLUTCH)(OIL CLUTCH)

(F7022570) ミッションギヤー

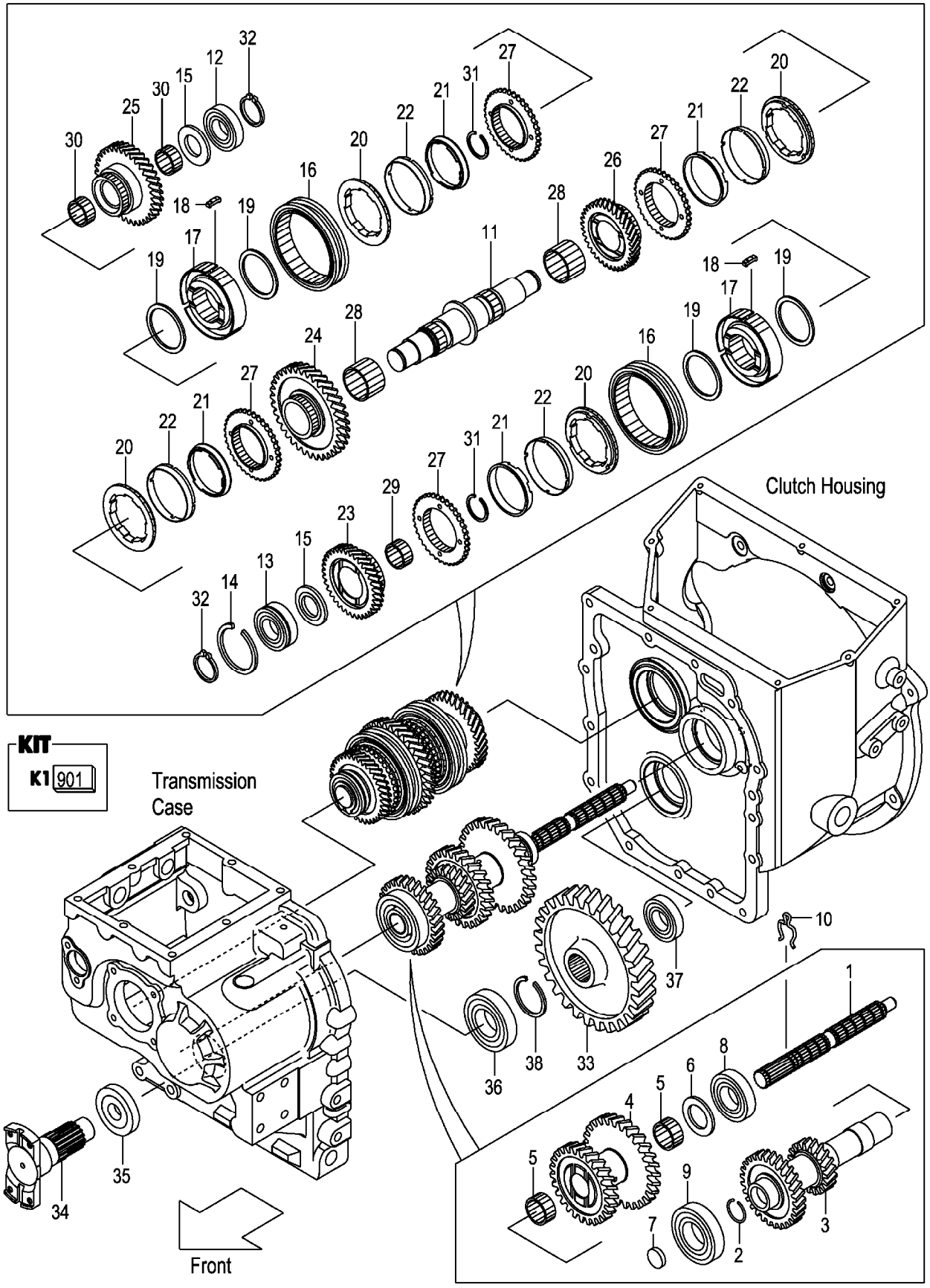

A:FG20C13 FG25C13 D:FD20C13 FD25C13
B:FG20C3 FG25C3 E:FD20C3 FD25C3
C:FG20W3 FG25W3 F:FD20W3 FD25W3

**FIG.64**
(F7022570)

| Item No | Part No. | Mark | Description | | Req'd | Remarks : Serial No. |
|---|---|---|---|---|---|---|
| 901 | 12N43-19801 | K1 | KIT,REPAIR,T/M | ﾘﾍﾟｱｷｯﾄ | 1 | A,B,D,E<br>INC.2,7,14,32,35,38,<br>FIG.62:3,11 |
| - | 12P43-19801 | K1 | KIT,REPAIR,T/M | ﾘﾍﾟｱｷｯﾄ | 1 | C,F<br>INC.2,7,14,32,35,38,<br>FIG.70:7-11,21,23 |
| 1 | 12N43-42051 | | SHAFT,MAIN-DRIVE | ｼｬﾌﾄ | 1 | |
| 2 | 12N43-42071 | * | RING,SNAP | ｽﾅｯﾌﾟﾘﾝｸﾞ | 1 | |
| 3 | 10A63-42001 | | SHAFT,INPUT | ｼｬﾌﾄ | 1 | A,D |
| - | 12N43-42101 | | SHAFT,INPUT | ｼｬﾌﾄ | 1 | B,C,E,F |
| 4 | 12N43-42111 | | GEAR,COUNTER | ｷﾞﾔｰ | 1 | |
| 5 | 12N43-42121 | | BEARING,NEEDLE | ﾍﾞｱﾘﾝｸﾞ | 2 | |
| 6 | 12N43-42131 | | PLATE,THRUST | ﾌﾟﾚｰﾄ | 1 | |
| 7 | 134A3-42071 | * | CAP | ｷｬｯﾌﾟ | 1 | |
| 8 | 03000-06207 | | BEARING,BALL | ﾍﾞｱﾘﾝｸﾞ | 1 | |
| 9 | 03000-06208 | | BEARING,BALL | ﾍﾞｱﾘﾝｸﾞ | 1 | |
| 10 | 12N43-42061 | | PIN,LOCK | ﾋﾟﾝ | 1 | |
| 11 | 12N43-42141 | | SHAFT,MAIN | ｼｬﾌﾄ | 1 | |
| 12 | 03000-06306 | | BEARING,BALL | ﾍﾞｱﾘﾝｸﾞ | 1 | |
| 13 | 03003-06306 | | BEARING,BALL | ﾍﾞｱﾘﾝｸﾞ | 1 | |
| 14 | 03192-30072 | * | RING,SNAP | ｽﾅｯﾌﾟﾘﾝｸﾞ | 1 | |
| 15 | 12N43-42191 | | PLATE,THRUST | ﾌﾟﾚｰﾄ | 2 | |
| 16 | 12N43-42151 | | SLEEVE | ｽﾘｰﾌﾞ | 2 | |
| 17 | 12N43-42161 | | HUB,CLUTCH | ﾊﾌﾞ | 2 | |
| 18 | 12N43-42171 | | INSERT | ｲﾝｻｰﾄ | 6 | |
| 19 | 15573-42021 | | SPRING,INSERT | ｽﾌﾟﾘﾝｸﾞ | 4 | |
| A1 | 12N43-40251 | | RING-ASSY,SYNCHRO | ﾘﾝｸﾞｱｯｾﾝ | 4 | INC.20-22 |
| 20 | 12N43-42201 | | RING,OUTER,SYNCHRO | ﾘﾝｸﾞ | 4 | |
| 21 | 12N43-42211 | | RING,INNER,SYNCHRO | ﾘﾝｸﾞ | 4 | |
| 22 | 12N43-42221 | | CORN,MIDDLE | ｺｰﾝ | 4 | |
| 23 | 12N43-42251 | | GEAR,HIGH-SPEED | ｷﾞﾔｰ | 1 | |
| 24 | 10A63-42011 | | GEAR,LOW-SPEED | ｷﾞﾔｰ | 1 | A,D |
| - | 12N43-42261 | | GEAR,LOW-SPEED | ｷﾞﾔｰ | 1 | B,C,E,F |
| 25 | 12N43-42271 | | GEAR,FORWARD | ｷﾞﾔｰ | 1 | |
| 26 | 12N43-42281 | | GEAR,REVERSE | ｷﾞﾔｰ | 1 | |
| 27 | 12N43-42291 | | GEAR | ｷﾞﾔｰ | 4 | |
| 28 | 12N43-42301 | | BEARING,NEEDLE | ﾍﾞｱﾘﾝｸﾞ | 2 | |
| 29 | 12003-42251 | | BEARING,NEEDLE | ﾍﾞｱﾘﾝｸﾞ | 1 | |
| 30 | 12N43-42321 | | BEARING,NEEDLE | ﾍﾞｱﾘﾝｸﾞ | 2 | |
| 31 | 02120-00038 | | RING,SNAP | ｽﾅｯﾌﾟﾘﾝｸﾞ | 2 | |
| 32 | 02100-00030 | * | RING,SNAP | ｽﾅｯﾌﾟﾘﾝｸﾞ | 2 | |
| - | 12N43-42551 | * | RING,SNAP,T-1.7 | ｽﾅｯﾌﾟﾘﾝｸﾞ | (2) | |
| - | 12N43-42561 | * | RING,SNAP,T-1.8 | ｽﾅｯﾌﾟﾘﾝｸﾞ | (2) | |
| - | 12N43-42571 | * | RING,SNAP,T-1.9 | ｽﾅｯﾌﾟﾘﾝｸﾞ | (2) | |
| - | 12N43-42581 | * | RING,SNAP,T-2.0 | ｽﾅｯﾌﾟﾘﾝｸﾞ | (2) | |
| 33 | 12N43-42351 | | GEAR,OUTPUT | ｷﾞﾔｰ | 1 | |
| 34 | 12N53-82201 | | FLANGE,T/M-OUTPUT | ﾌﾗﾝｼﾞ | 1 | |
| 35 | 12N53-82211 | * | SEAL,OIL | ｼｰﾙ | 1 | |
| 36 | 03000-06208 | | BEARING,BALL | ﾍﾞｱﾘﾝｸﾞ | 1 | |
| 37 | 03000-06306 | | BEARING,BALL | ﾍﾞｱﾘﾝｸﾞ | 1 | |

# FIG.64 MISSION GEAR (CLUTCH)(OIL CLUTCH)

(F7022570) ミッションギヤー

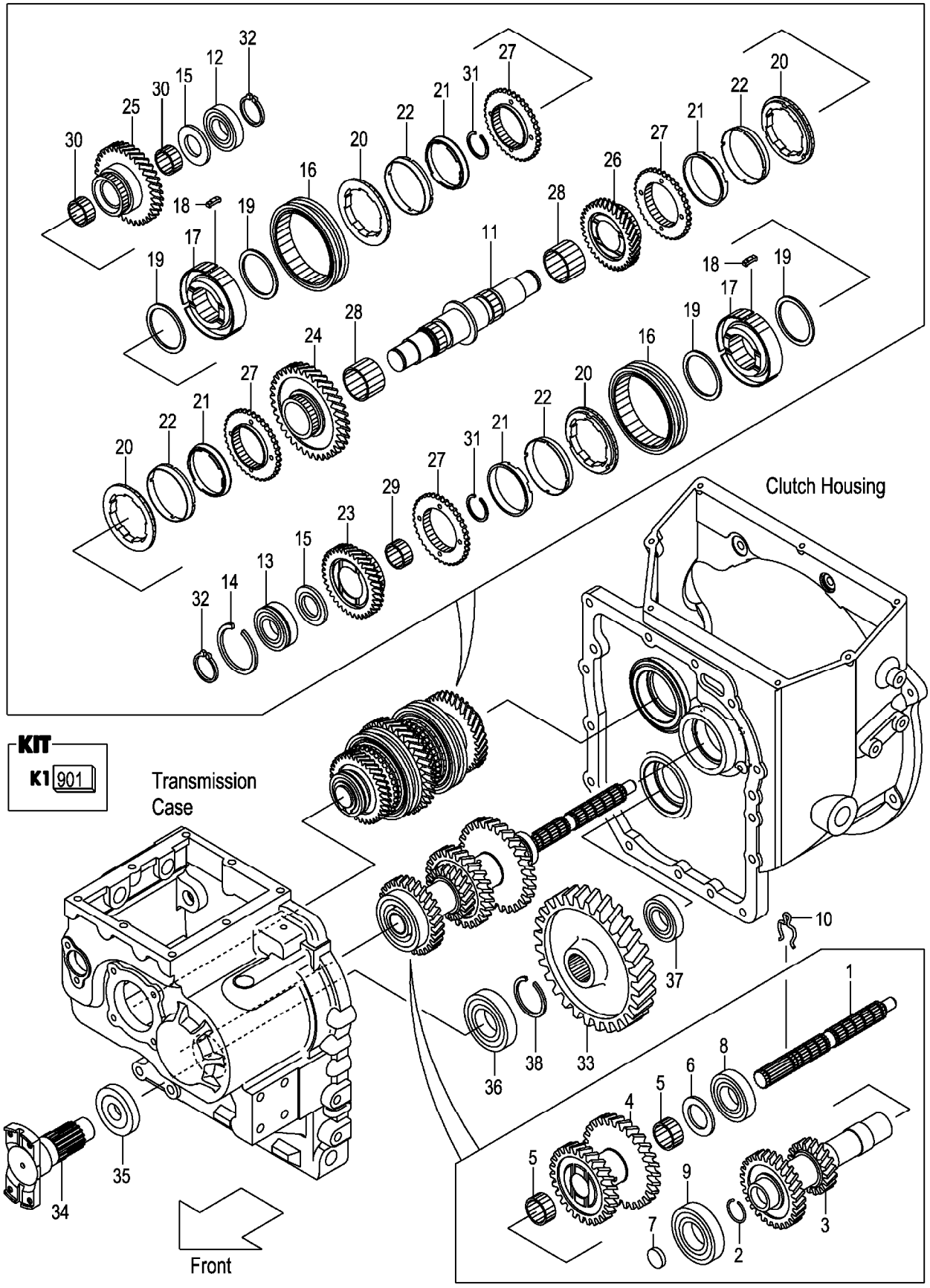

A:FG20C13 FG25C13 D:FD20C13 FD25C13
B:FG20C3 FG25C3 E:FD20C3 FD25C3
C:FG20W3 FG25W3 F:FD20W3 FD25W3

**FIG.64**
(F7022570)

| Item No | Part No. | Mark | Description | Req'd | Remarks : Serial No. |
|---|---|---|---|---|---|
| 38 | 02120-00040 | * | RING,SNAP ｽﾅｯﾌﾟﾘﾝｸﾞ | 1 | |

# M E M O

# M E M O

# FIG.65 TORQUE CONVERTER CASE (TOR-CON)

(F7022580) トルクコンバータケース

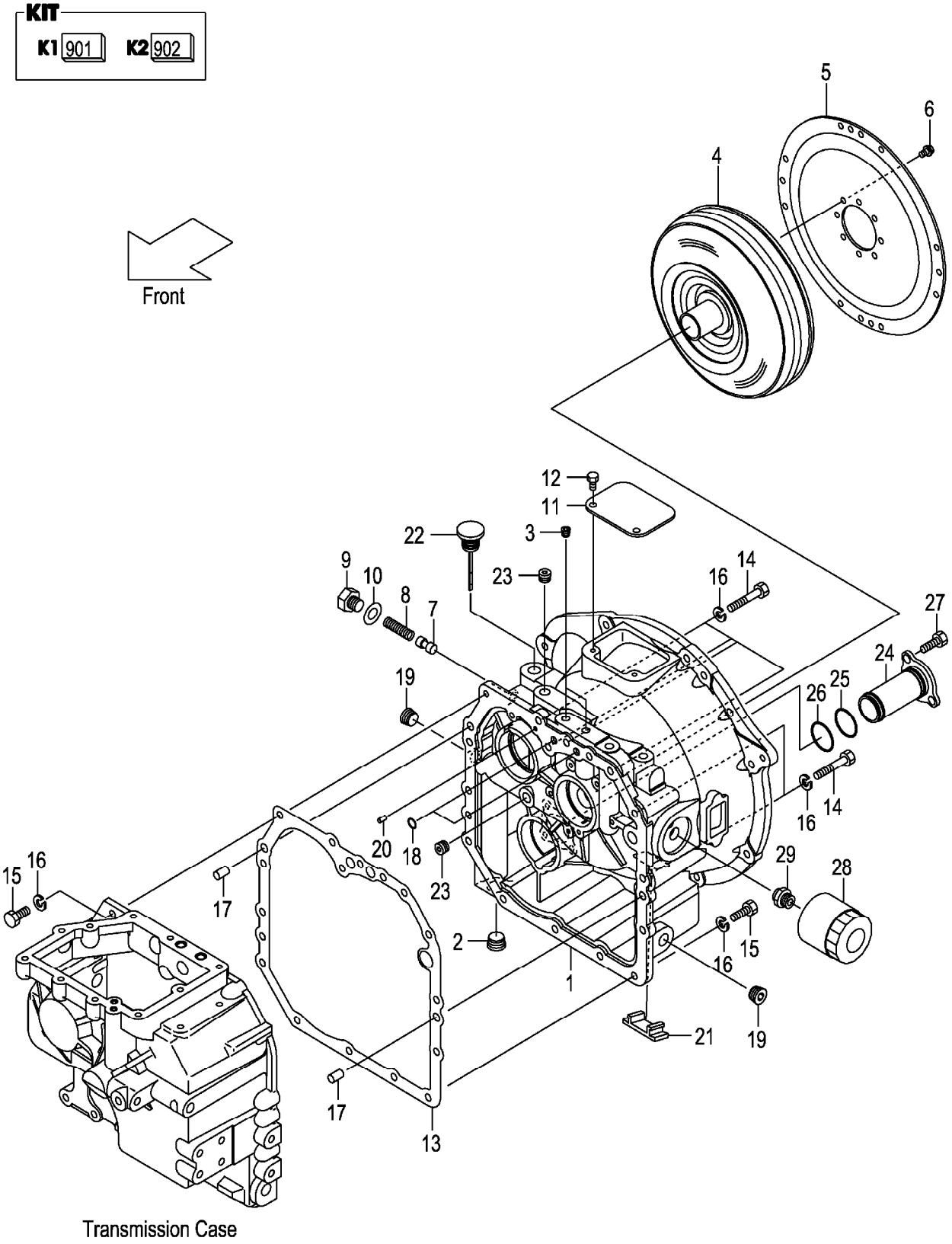

A:FG20T13 FG25T13 C:FD20T13 FD25T13
B:FG20T3 FG25T3 D:FD20T3 FD25T3

(F7022580)

| Item No | Part No. | Mark | Description | | Req'd | Remarks : Serial No. |
|---|---|---|---|---|---|---|
| 901 | 12N53-89801 | K1 | KIT,REPAIR,T/M | ﾘﾍﾟｱｷｯﾄ | 1 | INC.10,13,18,FIG.67:9,11-14 |
| 902 | 12N53-89811 | K2 | KIT,SUCTION-STRAINER | ｻｸｼｮﾝｽﾄﾚｰﾅｷｯﾄ | 1 | INC.24-26 |
| 1 | 12N53-82001 | | CASE,TOR-CON | ｹｰｽ | 1 | |
| 2 | 27397-52101 | | PLUG | ﾌﾟﾗｸﾞ | 1 | |
| 3 | 116H3-82101 | | PLUG | ﾌﾟﾗｸﾞ | 2 | |
| 4 | 12N53-80301 | | TORQUE-CONVERTER | ﾄﾙｸｺﾝﾊﾞｰﾀ | 1 | |
| 5 | 12N53-80311 | | PLATE,INPUT | ﾌﾟﾚｰﾄ | 1 | |
| 6 | 12N53-82621 | | BOLT,FLANGE | ﾎﾞﾙﾄ | 8 | |
| 7 | 12N53-82011 | | PISTON | ﾋﾟｽﾄﾝ | 1 | |
| 8 | 12163-82331 | | SPRING | ｽﾌﾟﾘﾝｸﾞ | 1 | |
| 9 | 12N53-82021 | | PLUG | ﾌﾟﾗｸﾞ | 1 | |
| 10 | 12163-82421 | * | PACKING | ﾊﾟｯｷﾝｸﾞ | 1 | |
| 11 | 12N53-82041 | | COVER,UPPER | ｶﾊﾞｰ | 1 | |
| 12 | 01185-08016 | | BOLT | ﾎﾞﾙﾄ | 2 | |
| 13 | 12N53-82081 | * | GASKET | ｶﾞｽｹｯﾄ | 1 | |
| 14 | 01103-10065 | | BOLT | ﾎﾞﾙﾄ | 6 | |
| 15 | 01103-10030 | | BOLT | ﾎﾞﾙﾄ | 9 | |
| 16 | 02011-00010 | | WASHER | ﾜｯｼｬ | 15 | |
| 17 | 02212-12020 | | PIN,PARALLEL | ﾋﾟﾝ | 2 | |
| 18 | 15583-82521 | * | O-RING | Oﾘﾝｸﾞ | 2 | |
| 19 | 12163-82541 | | PLUG | ﾌﾟﾗｸﾞ | 2 | |
| 20 | 15943-83261 | | PIN,PARALLEL | ﾋﾟﾝ | 1 | |
| 21 | 12N53-82061 | | COVER,UNDER | ｶﾊﾞｰ | 1 | |
| 22 | 12N53-82711 | | GAUGE,LEVEL | ｹﾞｰｼﾞ | 1 | |
| 23 | 24329-45541 | | PLUG | ﾌﾟﾗｸﾞ | 2 | |
| 24 | NO PART NO. | #* | STRAINER,SUCTION | ｽﾄﾚｰﾅ | 1 | |
| 25 | 115G3-82111 | * | O-RING | Oﾘﾝｸﾞ | 1 | |
| 26 | 12N53-82761 | * | O-RING | Oﾘﾝｸﾞ | 1 | |
| 27 | 01100-08020 | | BOLT | ﾎﾞﾙﾄ | 3 | |
| 28 | 115G3-82241 | | FILTER,OIL | ﾌｨﾙﾀ | 1 | |
| 29 | 115G3-82251 | | NIPPLE | ﾆｯﾌﾟﾙ | 1 | |

# FIG.66 CHARGING PUMP (TOR-CON)

(F7022590) ﾁｬｰｼﾞﾝｸﾞﾎﾟﾝﾌﾟ

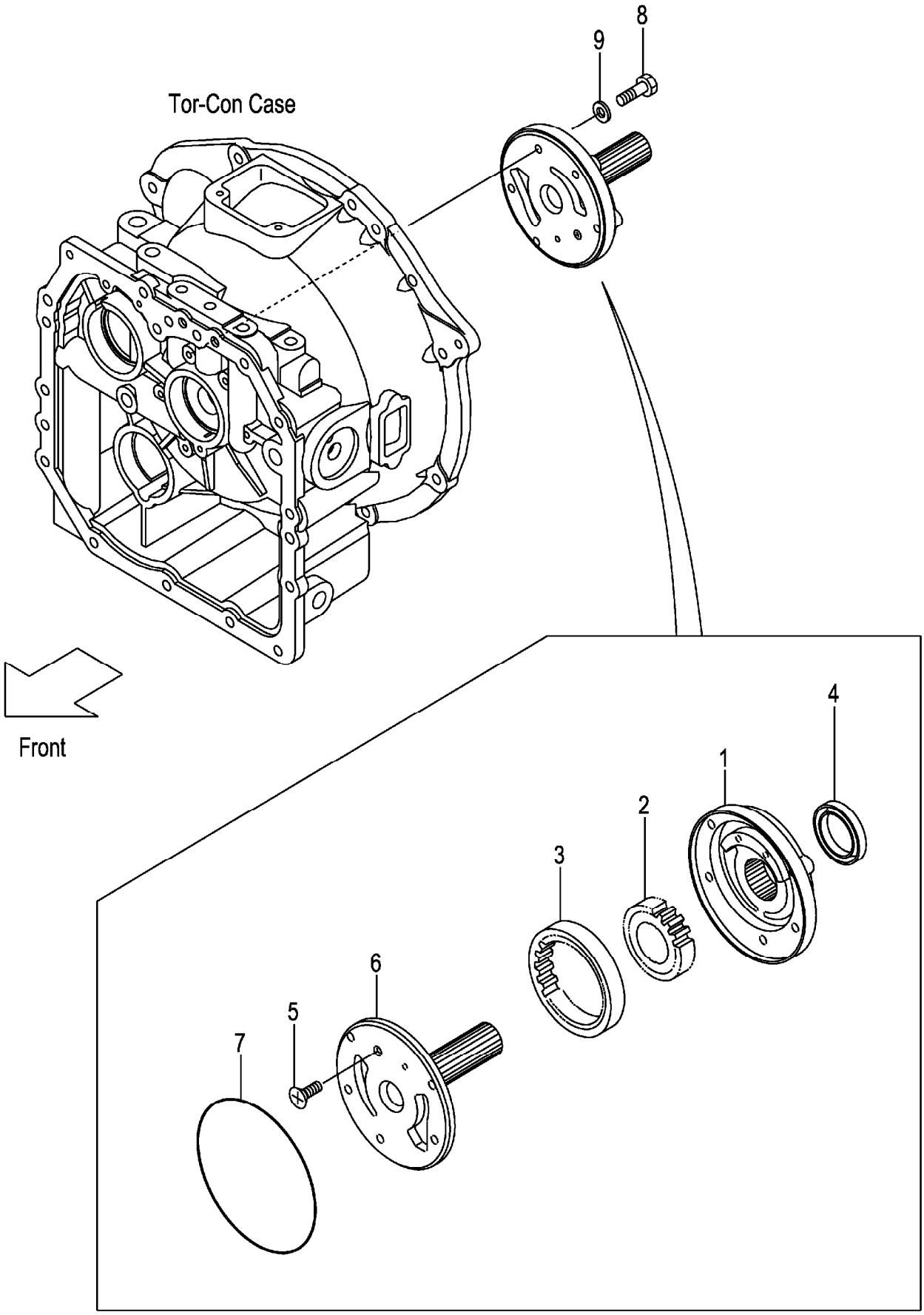

A:FG20T13 FG25T13 C:FD20T13 FD25T13
B:FG20T3 FG25T3 D:FD20T3 FD25T3

| Item No | Part No. | Mark | Description | | Req'd | Remarks : Serial No. |
|---|---|---|---|---|---|---|
| A1 | 12N53-80321 | | PUMP-ASSY,CHARGING | | 1 | INC.1-7 |
| | | | | ﾁｬｰｼﾞﾝｸﾞﾎﾟﾝﾌﾟｱｯｾﾝ | | |
| 1 | NO PART NO. | # | CASE,PUMP | ｹｰｽ | 1 | |
| 2 | NO PART NO. | # | GEAR,DRIVE | ｷﾞﾔｰ | 1 | |
| 3 | NO PART NO. | # | GEAR,DRIVEN | ｷﾞﾔｰ | 1 | |
| 4 | BK-8104209010 | | SEAL,OIL | ｼｰﾙ | 1 | |
| 5 | BK-8059061000 | | SCREW | ｽｸﾘｭ | 1 | |
| 6 | BK-7341006000 | | SUPPORT,STARTER | ｻﾎﾟｰﾄ | 1 | |
| 7 | BK-81431A4700 | | O-RING | Oﾘﾝｸﾞ | 1 | |
| 8 | 12N53-82641 | | BOLT,FLANGE | ﾎﾞﾙﾄ | 5 | |
| 9 | 12163-82561 | | PACKING | ﾊﾟｯｷﾝｸﾞ | 5 | |

# FIG.67 MISSION CASE (TOR-CON)

(F70225A0) ミッションケース

KIT
K1 901

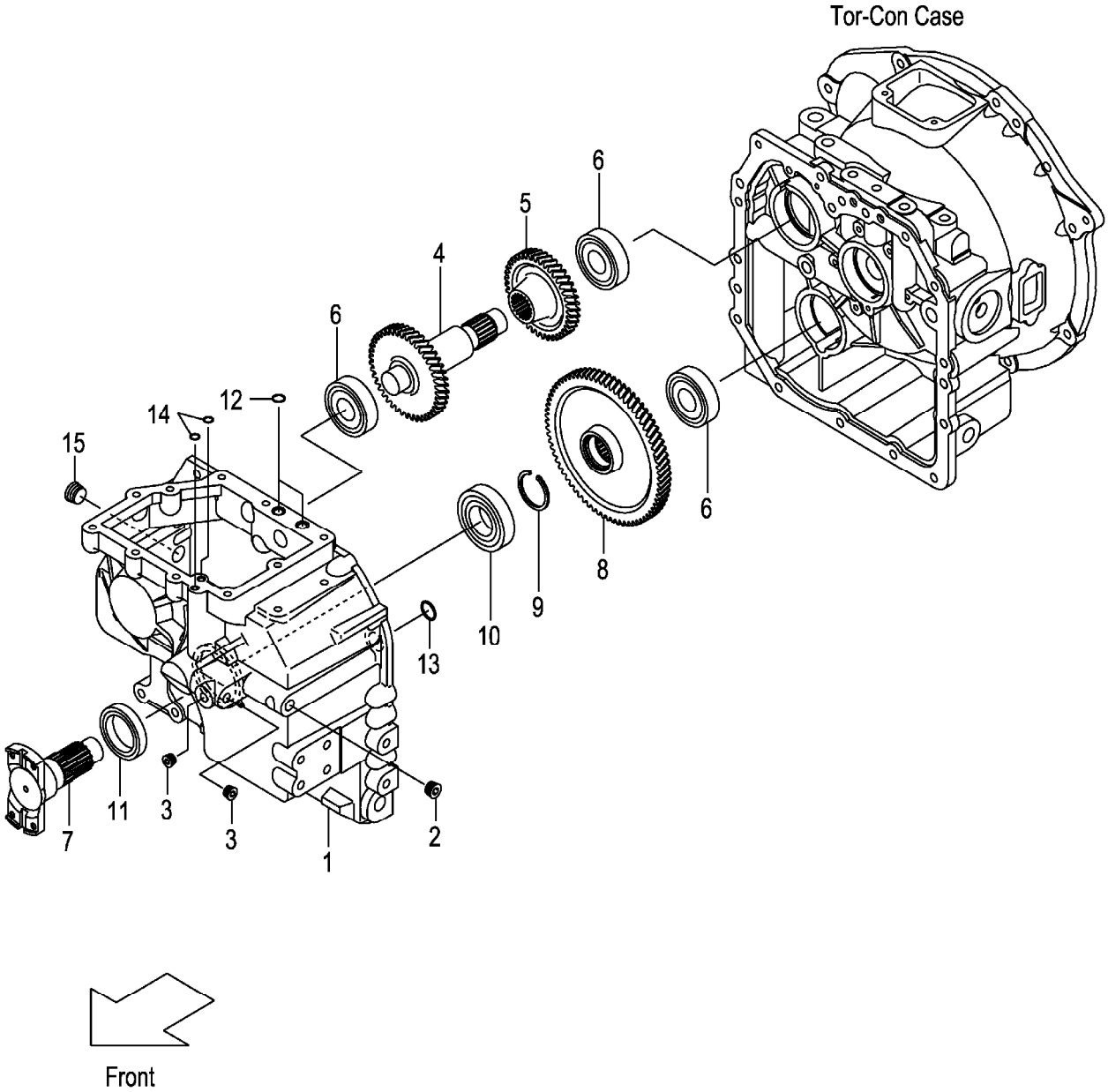

A:FG20T13 FG25T13 C:FD20T13 FD25T13
B:FG20T3 FG25T3 D:FD20T3 FD25T3

| Item No | Part No. | Mark | Description | | Req'd | Remarks : Serial No. |
|---|---|---|---|---|---|---|
| 901 | 12N53-89801 | K1 | KIT,REPAIR,T/M | ﾘﾍﾟｱｷｯﾄ | 1 | INC.9,11-14,FIG.65:10,13,18 |
| 1 | 12N53-82091 | | CASE,T/M | ｹｰｽ | 1 | |
| 2 | 24329-45541 | | PLUG | ﾌﾟﾗｸﾞ | 1 | |
| 3 | 116H3-82101 | | PLUG | ﾌﾟﾗｸﾞ | 2 | |
| 4 | 12N53-82151 | | SHAFT,IDLER | ｼｬﾌﾄ | 1 | |
| 5 | 12N53-82161 | | SHAFT,GEAR | ｼｬﾌﾄ | 1 | |
| 6 | 03000-06306 | | BEARING,BALL | ﾍﾞｱﾘﾝｸﾞ | 3 | |
| 7 | 12N53-82201 | | FLANGE,T/M-OUTPUT | ﾌﾗﾝｼﾞ | 1 | |
| 8 | 12N53-82171 | | GEAR,OUTPUT | ｷﾞﾔｰ | 1 | |
| 9 | 02120-00040 | * | RING,SNAP | ｽﾅｯﾌﾟﾘﾝｸﾞ | 1 | |
| 10 | 03000-06208 | | BEARING,BALL | ﾍﾞｱﾘﾝｸﾞ | 1 | |
| 11 | 12N53-82211 | * | SEAL,OIL | ｼｰﾙ | 1 | |
| 12 | 15583-82521 | * | O-RING | Oﾘﾝｸﾞ | 2 | |
| 13 | 15583-82101 | * | O-RING | Oﾘﾝｸﾞ | 1 | |
| 14 | 15583-82571 | * | O-RING | Oﾘﾝｸﾞ | 2 | |
| 15 | 12163-82541 | | PLUG | ﾌﾟﾗｸﾞ | 1 | |

# FIG.68 CLUTCH PACK (TOR-CON)

(F70225B0) クラッチパック

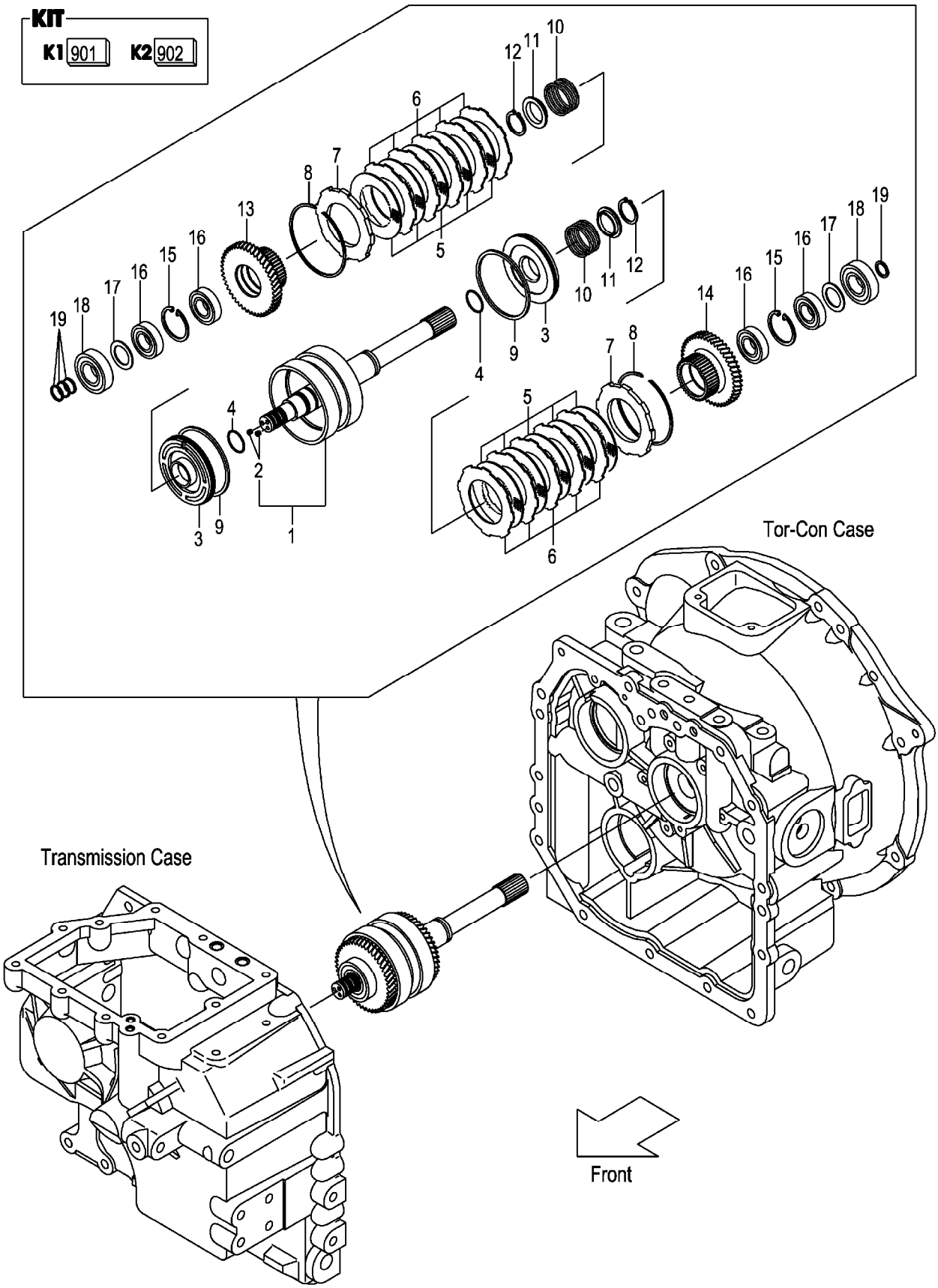

A:FG20T13 FG25T13 C:FD20T13 FD25T13
B:FG20T3 FG25T3 D:FD20T3 FD25T3

| Item No | Part No. | Mark | Description | | Req'd | Remarks : Serial No. |
|---|---|---|---|---|---|---|
| A1 | 12N53-80201 | | CLUTCH-ASSY,HYDRAU | ﾊｲﾄﾞﾛｸﾗｯﾁｱｯｾﾝ | 1 | INC.1-19 |
| 901 | 134G3-89811 | K1 | KIT,REPAIR,CLUTCH | ﾘﾍﾟｱｷｯﾄ | 1 | INC.4,8,9,11,12,19 |
| 902 | 134G3-89831 | K2 | KIT,REPAIR,DISK | ﾘﾍﾟｱｷｯﾄ | 1 | INC.5,6 |
| 1 | 12N53-82131 | | SHAFT,INPUT | ｼｬﾌﾄ | 1 | INC.2 |
| 2 | 01066-08008 | | PLUG | ﾌﾟﾗｸﾞ | 2 | |
| 3 | 134G3-82111 | | PISTON | ﾋﾟｽﾄﾝ | 2 | |
| 4 | 11243-82211 | * | O-RING | Oﾘﾝｸﾞ | 2 | |
| 5 | 134B3-82401 | * | PLATE,FRICTION | ﾌﾟﾚｰﾄ | 10 | |
| 6 | 134G3-82121 | * | PLATE,MATING | ﾌﾟﾚｰﾄ | 10 | |
| 7 | 134G3-82131 | | END,CLUTCH | ｴﾝﾄﾞ | 2 | |
| 8 | 11243-82181 | * | RING,SNAP | ｽﾅｯﾌﾟﾘﾝｸﾞ | 2 | |
| 9 | 134G3-82141 | * | RING,SEAL | ﾘﾝｸﾞ | 2 | |
| 10 | 11243-82081 | | SPRING,RETURN,CLUTCH | ｽﾌﾟﾘﾝｸﾞ | 2 | |
| 11 | 11243-82091 | * | SHEET,SPRING | ｼｰﾄ | 2 | |
| 12 | 02100-00040 | * | RING,SNAP | ｽﾅｯﾌﾟﾘﾝｸﾞ | 2 | |
| 13 | 12N53-82101 | | GEAR,FORWARD | ｷﾞﾔｰ | 1 | |
| 14 | 12N53-82111 | | GEAR,REVERSE | ｷﾞﾔｰ | 1 | |
| 15 | 02121-00058 | | RING,SNAP | ｽﾅｯﾌﾟﾘﾝｸﾞ | 2 | |
| 16 | 115G3-82351 | | BEARING,BALL | ﾍﾞｱﾘﾝｸﾞ | 4 | |
| 17 | 115G3-82361 | | PLATE,THRUST | ﾌﾟﾚｰﾄ | 2 | |
| 18 | 03000-06306 | | BEARING,BALL | ﾍﾞｱﾘﾝｸﾞ | 2 | |
| 19 | 11243-82161 | * | RING,SEAL | ﾘﾝｸﾞ | 4 | |

# FIG.69 CONTROL VALVE (TOR-CON)

(F70225C0) コントロールバルブ

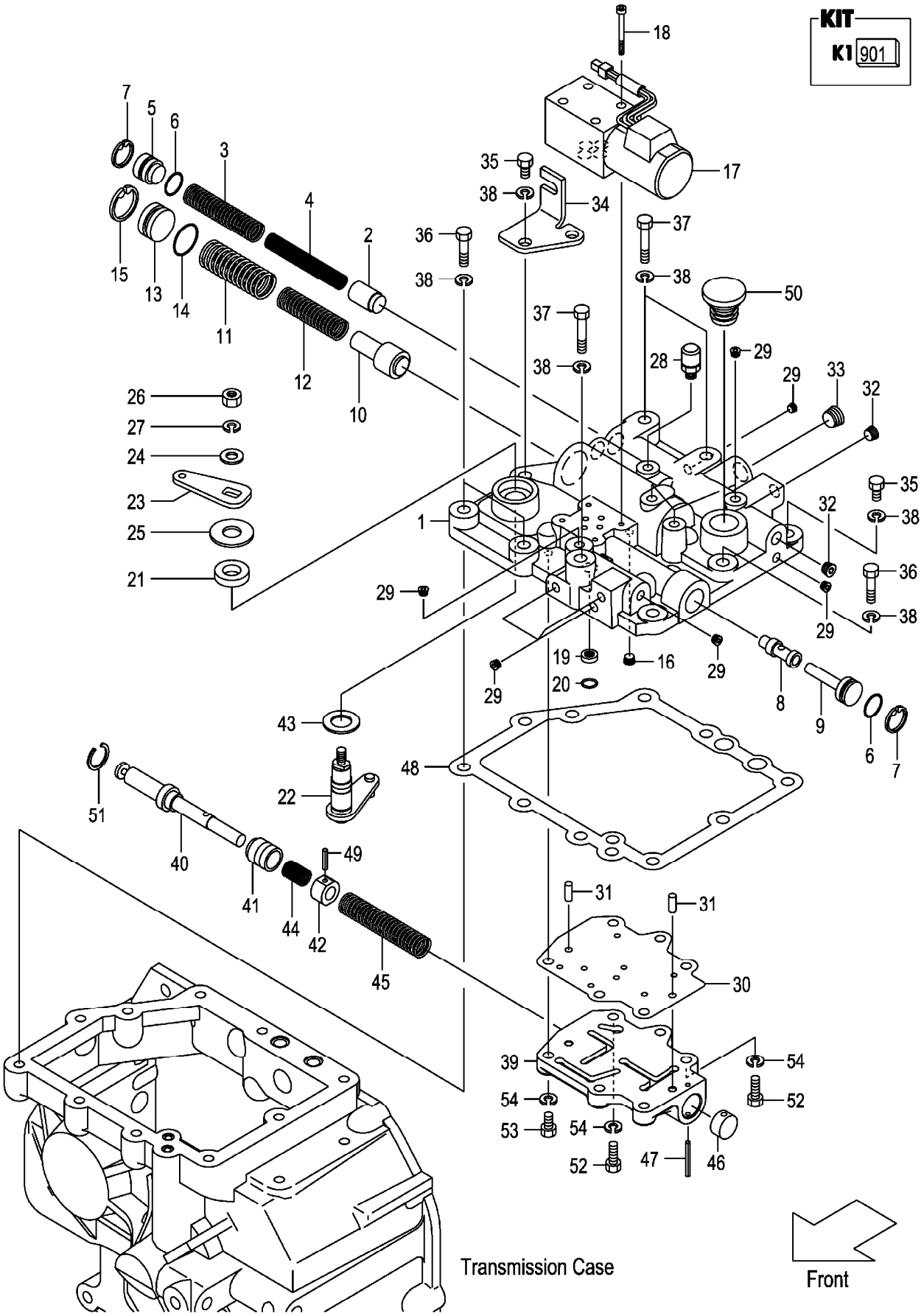

A:FG20T13 FG25T13 C:FD20T13 FD25T13
B:FG20T3 FG25T3 D:FD20T3 FD25T3

| Item No | Part No. | Mark | Description | | Req'd | Remarks : Serial No. |
|---|---|---|---|---|---|---|
| A1 | 12N53-80341 | | VALVE-ASSY,CONTROL | ｺﾝﾄﾛｰﾙﾊﾞﾙﾌﾞｱｯｾﾝ | 1 | INC.1-51 |
| 901 | 12N53-89831 | K1 | KIT,REPAIR,VALVE | ﾘﾍﾟｱｷｯﾄ | 1 | INC.6,7,14,15,21,25,30,43, 47,48,51 |
| 1 | 12N53-82221 | | COVER,CASE | ｶﾊﾞｰ | 1 | |
| 2 | 12N53-82291 | | PISTON,MAIN-RELIEF | ﾋﾟｽﾄﾝ | 1 | |
| 3 | 15583-82411 | | SPRING | ｽﾌﾟﾘﾝｸﾞ | 1 | |
| 4 | 15583-82421 | | SPRING | ｽﾌﾟﾘﾝｸﾞ | 1 | |
| 5 | 12N53-82371 | | PLUG,MAIN-RELIEF | ﾌﾟﾗｸﾞ | 1 | |
| 6 | 118H3-82231 | * | O-RING | Oﾘﾝｸﾞ | 2 | |
| 7 | 02110-00022 | * | RING,SNAP | ｽﾅｯﾌﾟﾘﾝｸﾞ | 2 | |
| 8 | 139B3-82121 | | SPOOL | ｽﾌﾟｰﾙ | 1 | |
| 9 | 12N53-82351 | | PLUG,FR-PISTON | ﾌﾟﾗｸﾞ | 1 | |
| 10 | 15583-82441 | | SPOOL,ACC | ｽﾌﾟｰﾙ | 1 | |
| 11 | 15583-82451 | | SPRING | ｽﾌﾟﾘﾝｸﾞ | 1 | |
| 12 | 15583-82461 | | SPRING | ｽﾌﾟﾘﾝｸﾞ | 1 | |
| 13 | 12N53-82361 | | PLUG,ACC | ﾌﾟﾗｸﾞ | 1 | |
| 14 | 12N53-82581 | * | O-RING | Oﾘﾝｸﾞ | 1 | |
| 15 | 02110-00030 | * | RING,SNAP | ｽﾅｯﾌﾟﾘﾝｸﾞ | 1 | |
| 16 | 115G3-82671 | | PLUG,CHOKE | ﾌﾟﾗｸﾞ | 1 | |
| 17 | 12N53-82551 | | VALVE,SOLENOID | ﾊﾞﾙﾌﾞ | 1 | |
| 18 | 01170-05045 | | BOLT | ﾎﾞﾙﾄ | 4 | |
| 19 | 12N53-82531 | | FILTER,COIN | ﾌｨﾙﾀ | 1 | |
| 20 | 12N53-82571 | | O-RING | Oﾘﾝｸﾞ | 1 | |
| 21 | 12N53-82251 | * | SEAL,OIL | ｼｰﾙ | 1 | |
| 22 | 12N53-82421 | | LINK,INCHING | ﾘﾝｸ | 1 | |
| 23 | 12N53-82451 | | PLATE,INCHING | ﾌﾟﾚｰﾄ | 1 | |
| 24 | 23656-42601 | | WASHER | ﾜｯｼｬ | 1 | |
| 25 | 12N53-82781 | * | WASHER | ﾜｯｼｬ | 1 | |
| 26 | 01400-00008 | | NUT | ﾅｯﾄ | 1 | |
| 27 | 02011-00008 | | WASHER | ﾜｯｼｬ | 1 | |
| 28 | 15573-42151 | | BREATHER,AIR | ﾌﾞﾘｰｻﾞ | 1 | |
| 29 | 116H3-82201 | | PLUG | ﾌﾟﾗｸﾞ | 10 | |
| 30 | 12N53-82721 | * | PLATE,SEPARATE | ﾌﾟﾚｰﾄ | 1 | |
| 31 | 02212-06016 | | PIN,PARALLEL | ﾋﾟﾝ | 2 | |
| 32 | 116H3-82101 | | PLUG | ﾌﾟﾗｸﾞ | 2 | |
| 33 | 24329-45541 | | PLUG | ﾌﾟﾗｸﾞ | 1 | |
| 34 | 12N53-82741 | | BRACKET,LINK | ﾌﾞﾗｹｯﾄ | 1 | |
| 35 | 01103-10030 | | BOLT | ﾎﾞﾙﾄ | 4 | |
| - | 01103-10030 | | BOLT | ﾎﾞﾙﾄ | 2 | [TPM] |
| 36 | 01103-10040 | | BOLT | ﾎﾞﾙﾄ | 3 | |
| 37 | 01103-10060 | | BOLT | ﾎﾞﾙﾄ | 3 | |
| 38 | 02011-00010 | | WASHER | ﾜｯｼｬ | 10 | |
| 39 | 12N53-82231 | | BODY,VALVE | ﾎﾞﾃﾞｨ | 1 | |
| 40 | 12N53-82731 | | SPOOL,INCHING | ｽﾌﾟｰﾙ | 1 | |
| 41 | 12N53-82321 | | PLUNGER | ﾌﾟﾗﾝｼﾞｬ | 1 | |
| 42 | 12N53-82331 | | PISTON | ﾋﾟｽﾄﾝ | 1 | |
| 43 | 12N53-82771 | * | WASHER | ﾜｯｼｬ | 1 | |
| 44 | 12N53-82501 | | SPRING | ｽﾌﾟﾘﾝｸﾞ | 1 | |
| 45 | 12N53-82481 | | SPRING | ｽﾌﾟﾘﾝｸﾞ | 1 | |
| 46 | 12N53-82401 | | PLUG | ﾌﾟﾗｸﾞ | 1 | |

# FIG.69 CONTROL VALVE (TOR-CON)

(F70225C0) コントロールバルブ

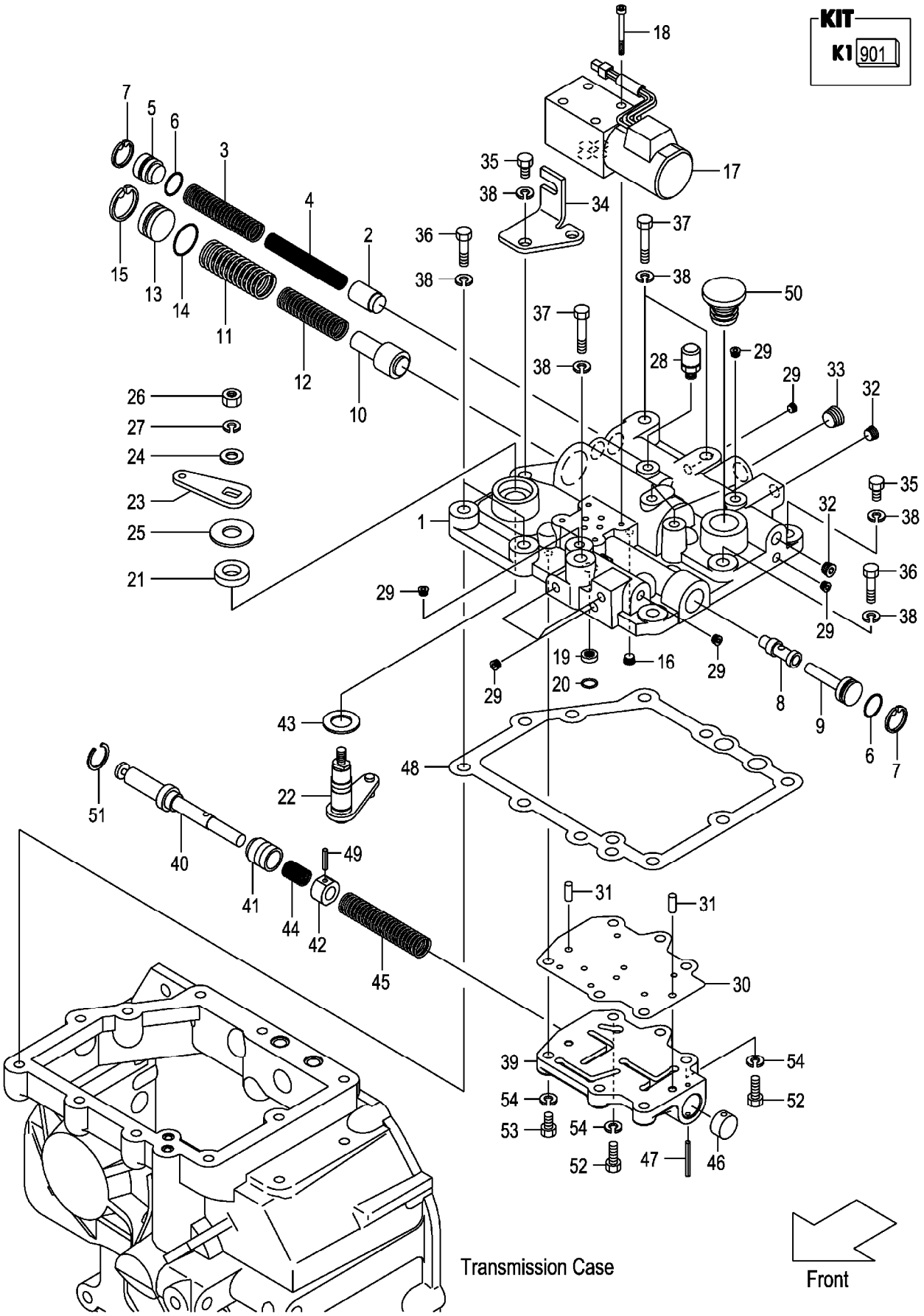

A:FG20T13 FG25T13 C:FD20T13 FD25T13
B:FG20T3 FG25T3 D:FD20T3 FD25T3

| Item No | Part No. | Mark | Description | | Req'd | Remarks : Serial No. |
|---|---|---|---|---|---|---|
| 47 | 02270-04035 | * | PIN,SPRING | ﾋﾟﾝ | 1 | |
| 48 | 12N53-82701 | * | GASKET,CASE-COVER | ｶﾞｽｹｯﾄ | 1 | |
| 49 | 02270-04020 | | PIN,SPRING | ﾋﾟﾝ | 1 | |
| 50 | 12N53-82751 | | CAP,OIL | ｷｬｯﾌﾟ | 1 | |
| 51 | 12N53-82791 | * | RING,SNAP | ｽﾅｯﾌﾟﾘﾝｸﾞ | 1 | |
| 52 | 01103-08040 | | BOLT | ﾎﾞﾙﾄ | 2 | |
| 53 | 01103-08030 | | BOLT | ﾎﾞﾙﾄ | 4 | |
| 54 | 02011-00008 | | WASHER | ﾜｯｼｬ | 6 | |

# M E M O

# M E M O

# FIG.70 CLUTCH (OIL CLUTCH)

(F70225D0) クラッチ

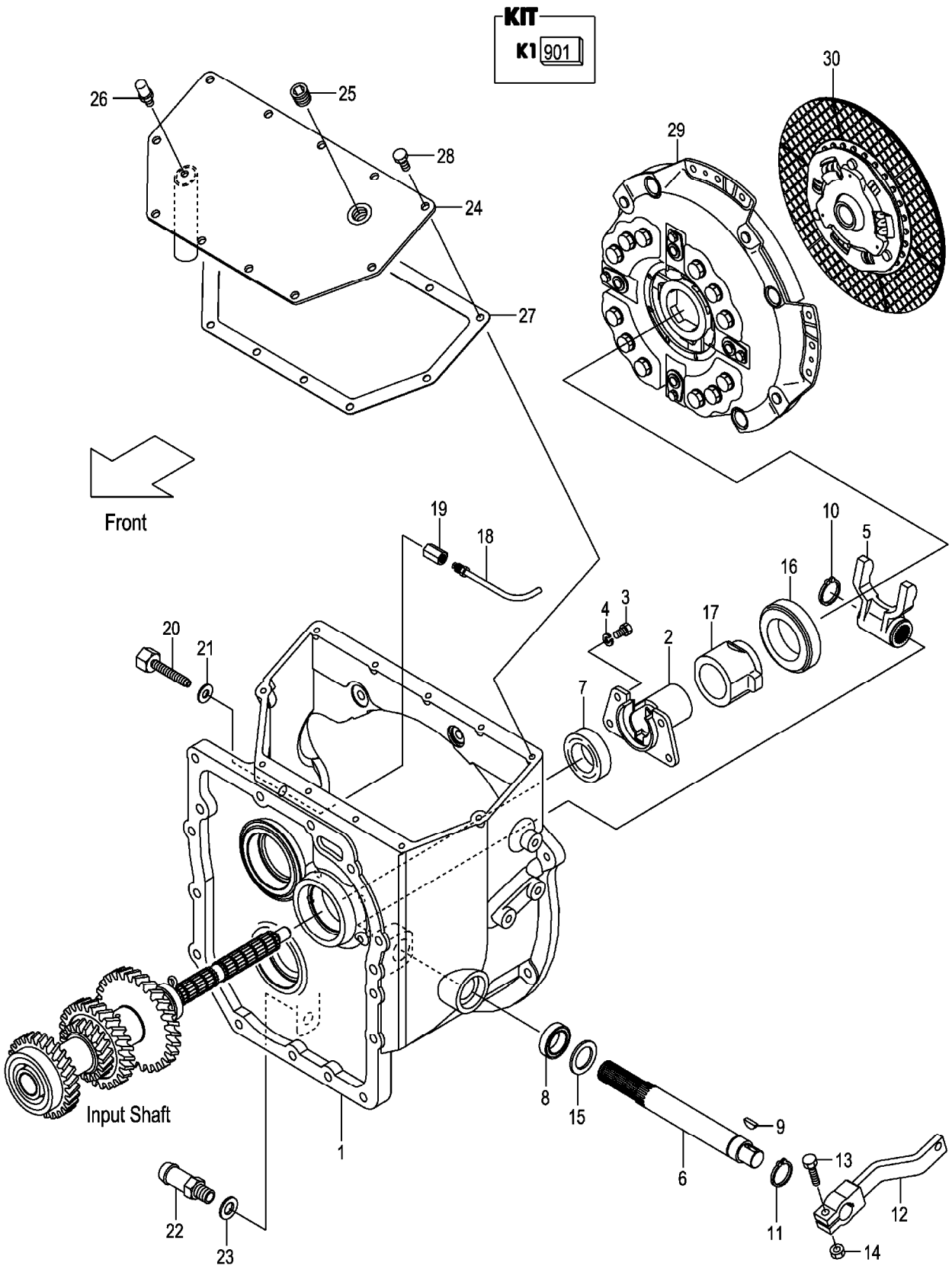

A:FG20W3 FG25W3
B:FD20W3 FD25W3

| Item No | Part No. | Mark | Description | | Req'd | Remarks : Serial No. |
|---|---|---|---|---|---|---|
| 901 | 12P43-19801 | K1 | KIT,REPAIR,T/M | ﾘﾍﾟｱｷｯﾄ | 1 | INC.7-11,21,23,FIG.64:2, 7,14,32,35,38 |
| 1 | 12P43-12301 | | HOUSING,CLUTCH | ﾊｳｼﾞﾝｸﾞ | 1 | |
| 2 | 12N43-12021 | | SUPPORT,RETAINER | ｻﾎﾟｰﾄ | 1 | |
| 3 | 01103-08016 | | BOLT | ﾎﾞﾙﾄ | 4 | |
| 4 | 02011-00008 | | WASHER | ﾜｯｼｬ | 4 | |
| 5 | 12N43-12101 | | YOKE | ﾖｰｸ | 1 | |
| 6 | 12P43-12021 | | SHAFT | ｼｬﾌﾄ | 1 | |
| 7 | 12P43-12011 | * | SEAL,OIL | ｼｰﾙ | 1 | |
| 8 | 19502-52552 | * | SEAL,OIL | ｼｰﾙ | 1 | |
| 9 | 02360-05019 | * | KEY | ｷｰ | 1 | |
| 10 | 02100-00025 | * | RING,SNAP | ｽﾅｯﾌﾟﾘﾝｸﾞ | 1 | |
| 11 | 02100-00028 | * | RING,SNAP | ｽﾅｯﾌﾟﾘﾝｸﾞ | 1 | |
| 12 | 12P43-12031 | | ARM | ｱｰﾑ | 1 | |
| 13 | 01183-08035 | | BOLT | ﾎﾞﾙﾄ | 1 | |
| 14 | 01400-00008 | | NUT | ﾅｯﾄ | 1 | |
| 15 | 02000-00027 | | WASHER | ﾜｯｼｬ | 1 | |
| 16 | 55593-62061 | | BEARING,THRUST | ﾍﾞｱﾘﾝｸﾞ | 1 | |
| 17 | 12P43-12051 | | RETAINER,BEARING | ﾘﾃｰﾅ | 1 | |
| 18 | 12P43-12061 | | NOZZLE,SPRAY | ﾉｰｽﾋﾟﾝ | 1 | |
| 19 | 131N3-12031 | | ADAPTER | ｱﾀﾞﾌﾟﾀ | 1 | |
| 20 | 12P43-12081 | | ADAPTER | ｱﾀﾞﾌﾟﾀ | 1 | |
| 21 | 15943-82701 | * | WASHER | ﾜｯｼｬ | 1 | |
| 22 | 131N3-12151 | | FITTING,HOSE | ﾌｨｯﾃｨﾝｸﾞ | 1 | |
| 23 | 22197-52091 | * | WASHER | ﾜｯｼｬ | 1 | |
| 24 | 12P43-12111 | | COVER,CLUTCH-HOUSING | ｶﾊﾞｰ | 1 | |
| 25 | 12163-82541 | | PLUG | ﾌﾟﾗｸﾞ | 1 | |
| 26 | 15573-42151 | | BREATHER,AIR | ﾌﾞﾘｰｻﾞ | 1 | |
| 27 | 12P43-12141 | | GASKET | ｶﾞｽｹｯﾄ | 1 | |
| 28 | 01183-08016 | | BOLT | ﾎﾞﾙﾄ | 11 | |
| 29 | 134H3-10201 | | COVER,CLUTCH | ｶﾊﾞｰ | 1 | |
| 30 | 55593-60301 | | DISK,CLUTCH | ﾃﾞｨｽｸ | 1 | A |
| - | 134H3-10211 | | DISK,CLUTCH | ﾃﾞｨｽｸ | 1 | B |

# FIG.71 SPOT LIGHT [SPL]

(F7022640) スポットライト

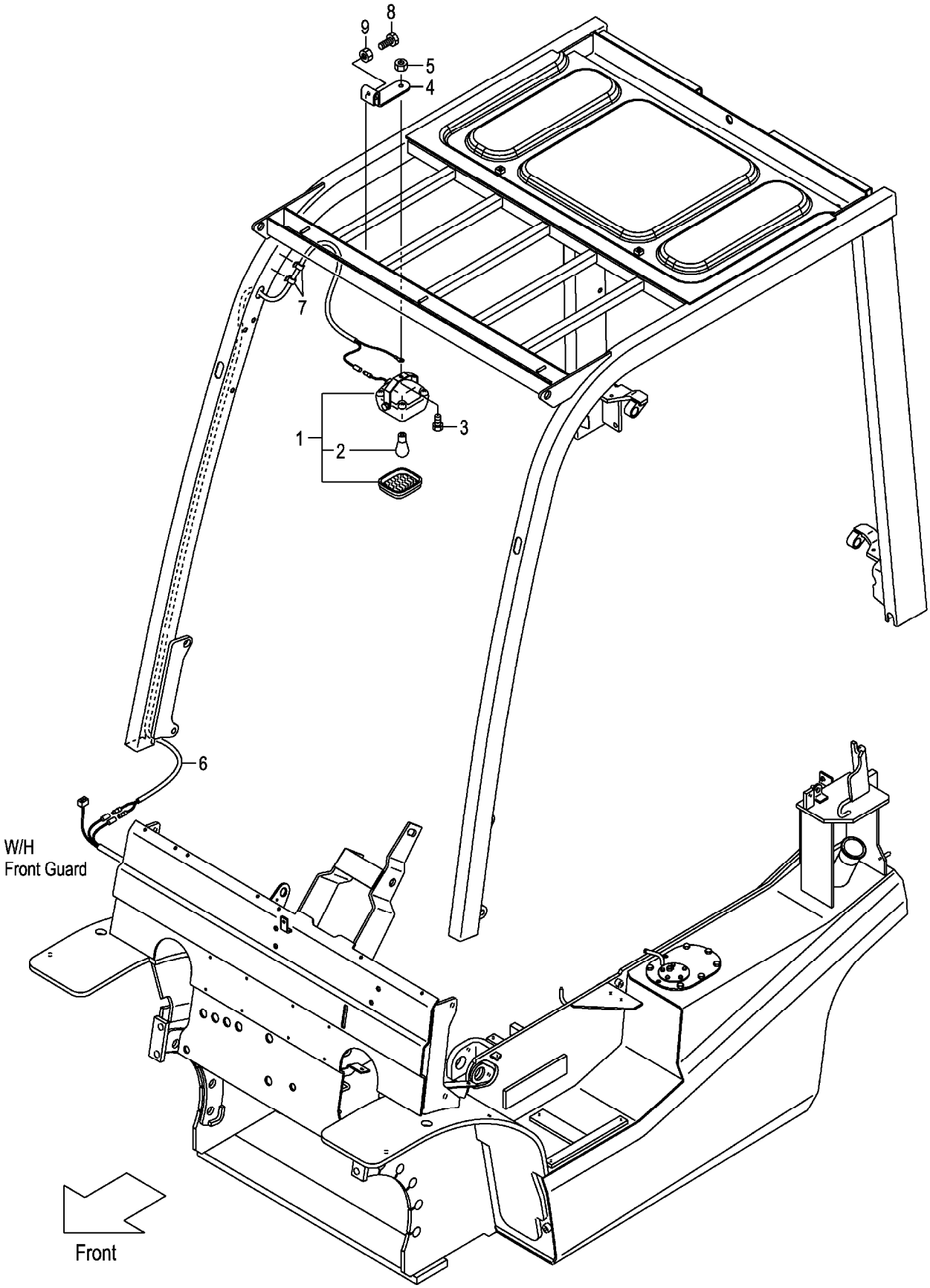

A:FG20C13 FG20T13 FG25C13 FG25T13 C:FD20C13 FD20T13 FD25C13 FD25T13 (F7022640)
B:FG20C3 FG20T3 FG25C3 FG25T3 FG20W3 FG25W3 D:FD20C3 FD20T3 FD25C3 FD25T3 FD20W3 FD25W3

| Item No | Part No. | Mark | Description | | Req'd | Remarks : Serial No. |
|---|---|---|---|---|---|---|
| 1 | 516G9-10101 | | LAMP-ASSY | ﾗﾝﾌﾟ | 1 | [SPL] INC.2 |
| 2 | 516G9-12011 | | BULB,12V/18.2W | ﾊﾞﾙﾌﾞ | 1 | [SPL] |
| 3 | 01185-08016 | | BOLT | ﾎﾞﾙﾄ | 1 | [SPL] |
| 4 | 52N59-02001 | | BRACKET,SPOT-LAMP | ﾌﾞﾗｹｯﾄ | 1 | [SPL] |
| 5 | 01400-00008 | | NUT | ﾅｯﾄ | 1 | [SPL] |
| 6 | 539A9-02011 | | WIRE-HARNESS,SPOT-L. | ﾜｲﾔﾊｰﾈｽ | 1 | [SPL] |
| 7 | 27732-42311 | | CLAMP,HARNESS | ｸﾗﾝﾌﾟ | 2 | [SPL] |
| 8 | 01100-08025 | | BOLT | ﾎﾞﾙﾄ | 2 | [SPL] |
| 9 | 01402-00008 | | NUT | ﾅｯﾄ | 2 | [SPL] |

# FIG.72 FAN [FAN]

(F7022650) ファン

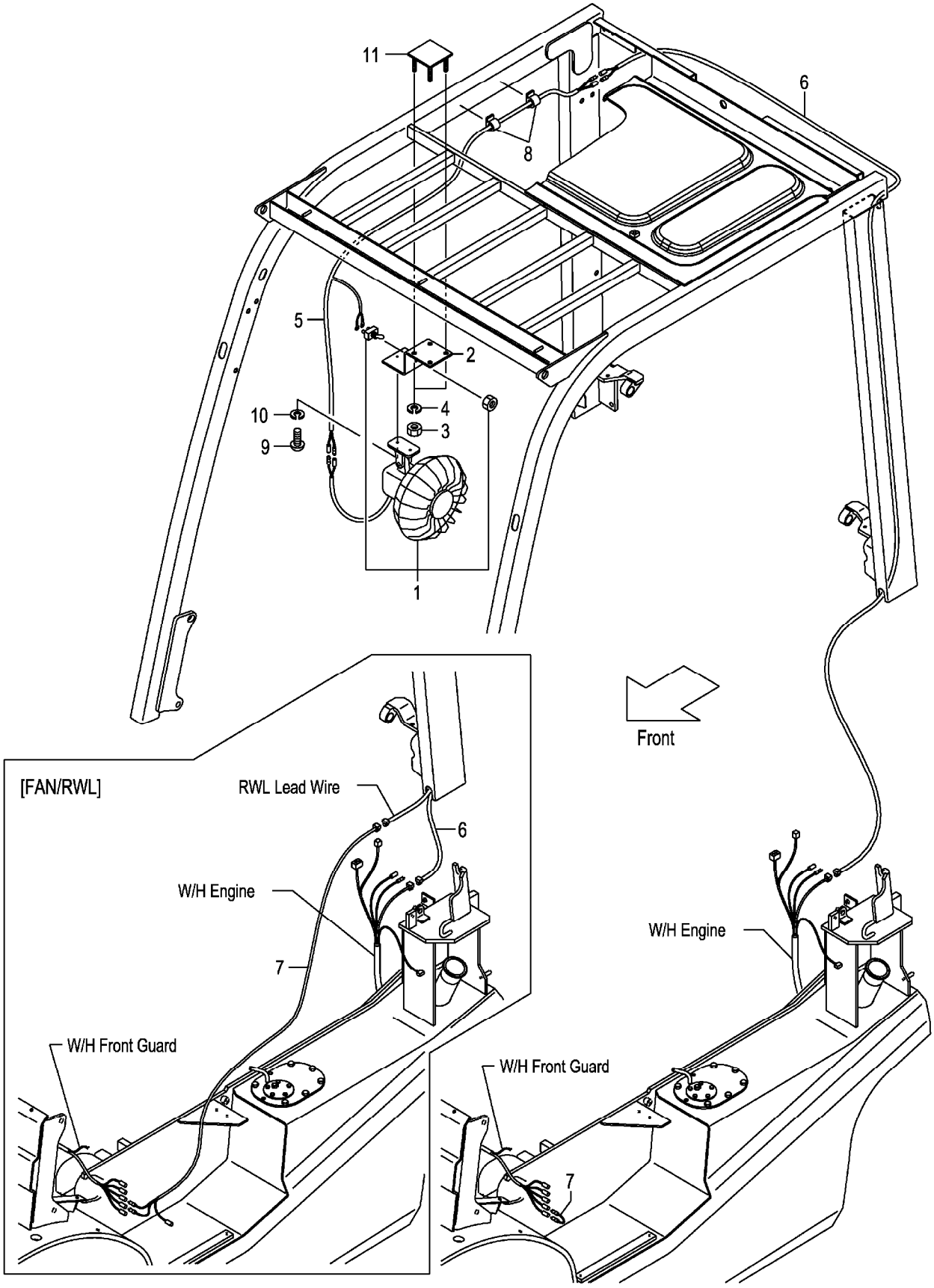

A:FG20C13 FG20T13 FG25C13 FG25T13 C:FD20C13 FD20T13 FD25C13 FD25T13 (F7022650)
B:FG20C3 FG20T3 FG25C3 FG25T3 FG20W3 FG25W3 D:FD20C3 FD20T3 FD25C3 FD25T3 FD20W3 FD25W3

| Item No | Part No. | Mark | Description | | Req'd | Remarks : Serial No. |
|---|---|---|---|---|---|---|
| 1 | 514A5-32341 | | FAN,CAR | ﾌｧﾝ | 1 | [FAN] |
| - | 514A5-32341 | | FAN,CAR | ﾌｧﾝ | 1 | B,D |
| | | | | | | [FAN/SCB001] |
| 2 | 52N58-22001 | | BRACKET,FAN | ﾌﾞﾗｹｯﾄ | 1 | [FAN](WITHOUT FAN/SCB001) |
| 3 | 01400-00008 | | NUT | ﾅｯﾄ | 4 | [FAN](WITHOUT FAN/SCB001) |
| 4 | 02010-00008 | | WASHER | ﾜｯｼｬ | 4 | [FAN](WITHOUT FAN/SCB001) |
| 5 | 539A8-22151 | | WIRE-HARNESS,FAN | ﾜｲﾔﾊｰﾈｽ | 1 | [FAN](WITHOUT FAN/SCB001) |
| 6 | 516G1-42111 | | WIRE,LEAD | ﾜｲﾔ | 1 | [FAN](WITHOUT FAN/SCB001) |
| 7 | 516G1-42211 | | WIRE,LEAD | ﾜｲﾔ | 1 | [FAN](WITHOUT FAN/SCB001) |
| - | 514A1-42041 | | WIRE,LEAD | ﾜｲﾔ | 1 | [FAN/RWL] |
| 8 | 27732-42311 | | CLAMP,HARNESS | ｸﾗﾝﾌﾟ | 4 | [FAN](WITHOUT FAN/SCB001) |
| 9 | 01030-04014 | | SCREW | ｽｸﾘｭ | 2 | [FAN] |
| - | 01044-04014 | | SCREW | ｽｸﾘｭ | 2 | B,D |
| | | | | | | [FAN/SCB001] |
| 10 | 02010-00004 | | WASHER | ﾜｯｼｬ | 2 | [FAN](WITHOUT FAN/SCB001) |
| 11 | 52N58-22101 | | BRACKET,FAN | ﾌﾞﾗｹｯﾄ | 1 | [FAN](WITHOUT FAN/SCB001) |
| 12 | 209K2-42351 | + | RELAY,1A | ﾘﾚｰ | 1 | B,D |
| | | | | | | [FAN/SCB001] |

# FIG.73 LIFT LOCK VALVE WIRE HARNESS [VLL]

(F7022660) ﾘﾌﾄﾛｯｸﾊﾞﾙﾌﾞﾜｲﾔﾊｰﾈｽ

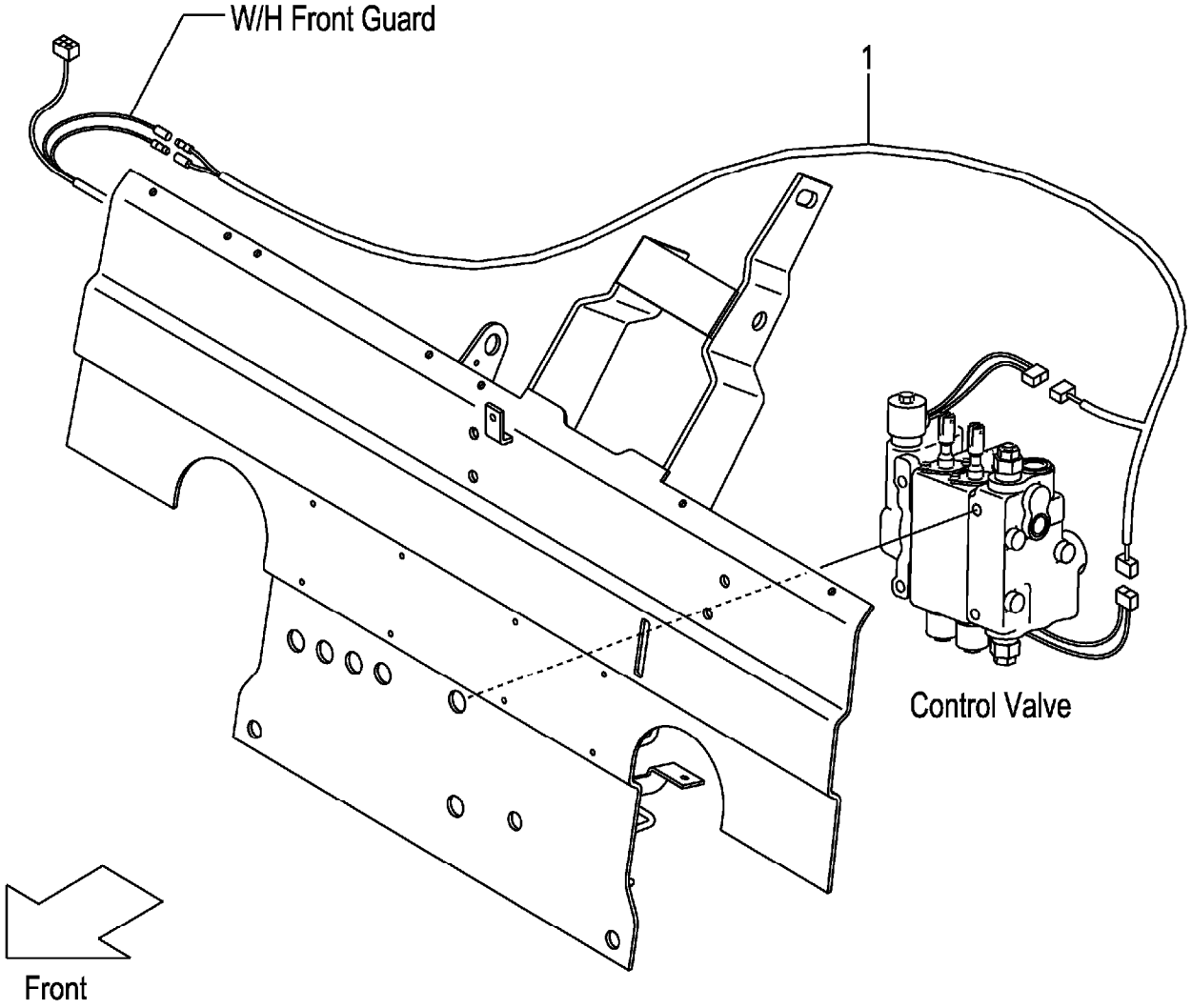

**FIG.73**

A:FG20C13 FG20T13 FG25C13 FG25T13 C:FD20C13 FD20T13 FD25C13 FD25T13 (F7022660)
B:FG20C3 FG20T3 FG25C3 FG25T3 FG20W3 FG25W3 D:FD20C3 FD20T3 FD25C3 FD25T3 FD20W3 FD25W3

| Item No | Part No. | Mark | Description | Req'd | Remarks : Serial No. |
|---|---|---|---|---|---|
| 1 | 52N56-72001 | | WIRE-HARNESS,VLL ﾜｲﾔﾊｰﾈｽ | 1 | [VLL]<br>(WITHOUT VLL/SIL,VLL/EXE, VLL/EXN) |

# FIG.74 AMMETER [AM]

(F70226A0) アンメータ

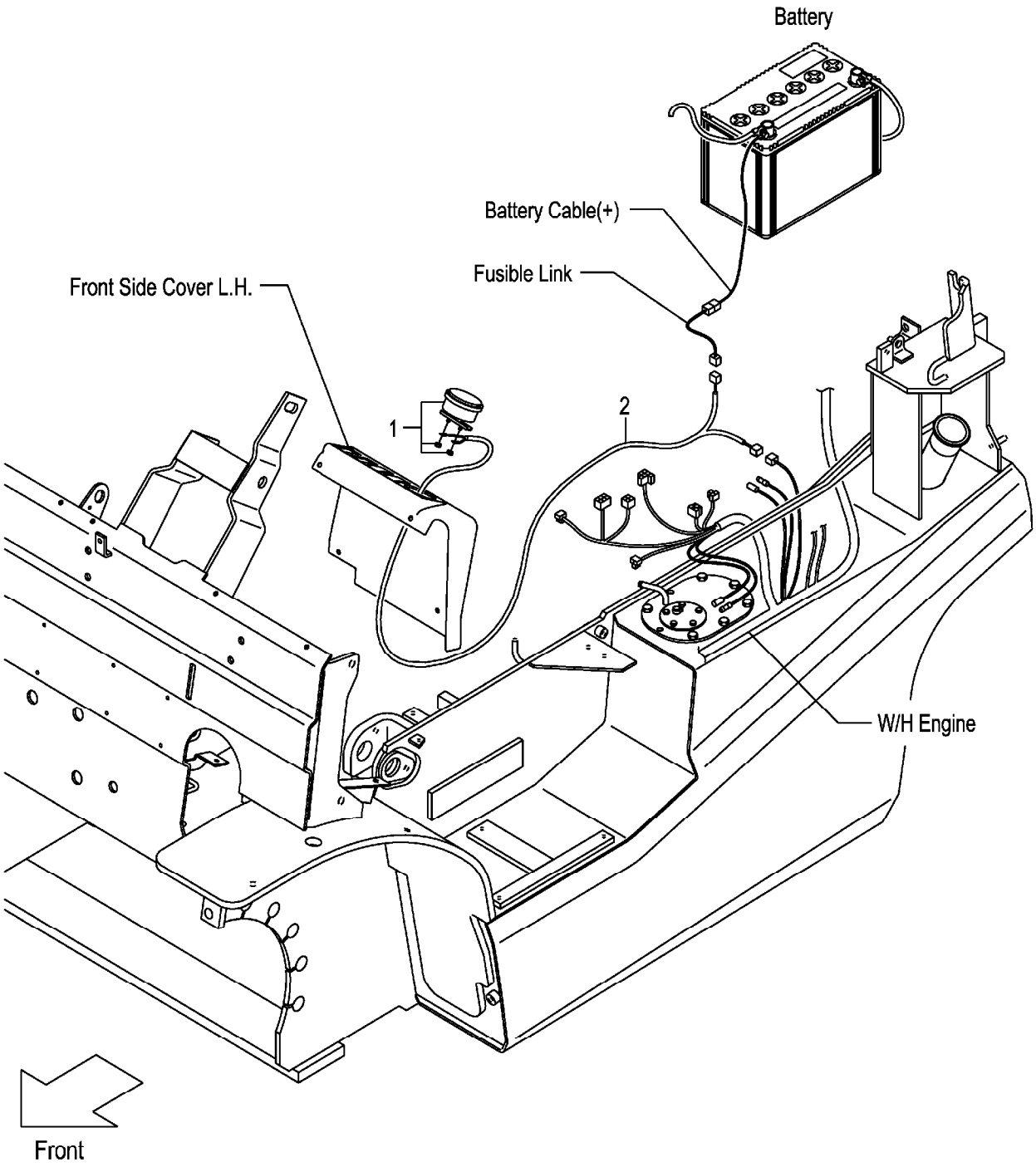

A:FG20C13 FG20T13 FG25C13 FG25T13 C:FD20C13 FD20T13 FD25C13 FD25T13 (F70226A0)
B:FG20C3 FG20T3 FG25C3 FG25T3 FG20W3 FG25W3 D:FD20C3 FD20T3 FD25C3 FD25T3 FD20W3 FD25W3

| Item No | Part No. | Mark | Description | Req'd | Remarks : Serial No. |
|---|---|---|---|---|---|
| 1 | 3956323 | | AMMETER,50A アンメータ | 1 | [AM] |
| 2 | 52N56-12051 | | WIRE,LEAD,AMMETER ワイヤ | 1 | [AM] |

# FIG.75 SPEED METER [SM]

(F70226B0) ｽﾋﾟｰﾄﾞﾒｰﾀ

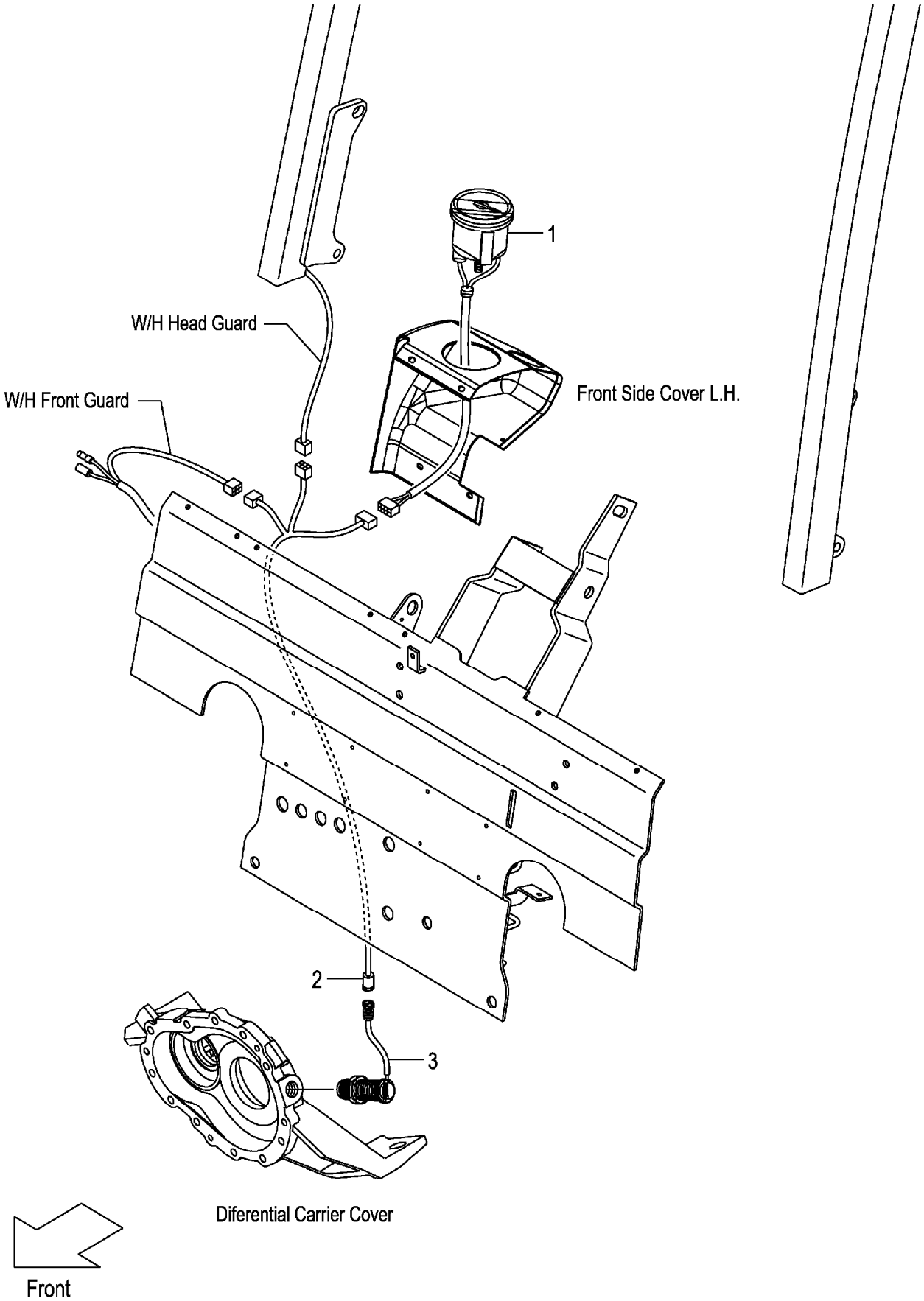

**FIG.75**

A:FG20C13 FG20T13 FG25C13 FG25T13 C:FD20C13 FD20T13 FD25C13 FD25T13 (F70226B0)
B:FG20C3 FG20T3 FG25C3 FG25T3 FG20W3 FG25W3 D:FD20C3 FD20T3 FD25C3 FD25T3 FD20W3 FD25W3

| Item No | Part No. | Mark | Description | | Req'd | Remarks : Serial No. |
|---|---|---|---|---|---|---|
| 1 | 50B77-50101 | | METER,SPEED | ﾒｰﾀ | 1 | A,C<br>[SM] |
| - | 52N57-50101 | | METER,SPEED | ﾒｰﾀ | 1 | B,D<br>[SM] |
| 2 | 52N57-50301 | | WIRE-HARNESS,SM | ﾜｲﾔﾊｰﾈｽ | 1 | [SM] |
| 3 | 16402-54331 | | SENSOR | ｾﾝｻ | 1 | [SM] |

# FIG.76 TORQUE CONVERTER THERMOMETER [TTM]

(F70226C0) トルクコンバータサーモメータ

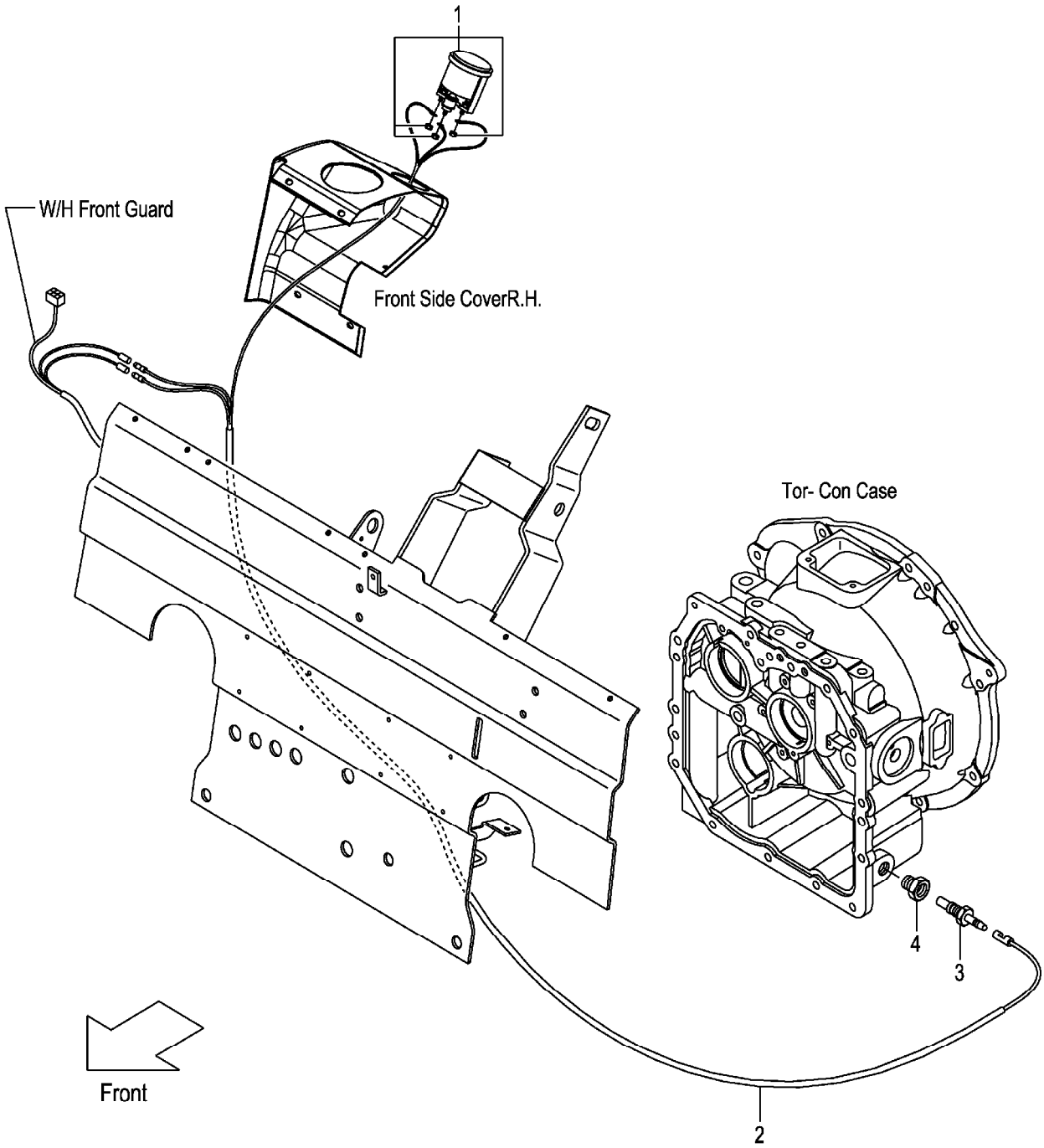

**FIG.76**

(F70226C0)

A:FG20T13 FG25T13 C:FD20T13 FD25T13
B:FG20T3 FG25T3 D:FD20T3 FD25T3

| Item No | Part No. | Mark | Description | | Req'd | Remarks : Serial No. |
|---|---|---|---|---|---|---|
| 1 | 52N58-82001 | | THERMOMETER | ｻｰﾓﾒｰﾀ | 1 | [TTM] |
| 2 | 52N58-82101 | | WIRE-HARNESS,TTM | ﾜｲﾔﾊｰﾈｽ | 1 | [TTM] |
| 3 | 23652-44001 | | UNIT,SENDING | ﾕﾆｯﾄ | 1 | [TTM] |
| 4 | 521A2-42061 | | ADAPTER,THERMO-SW. | ｱﾀﾞﾌﾟﾀ | 1 | [TTM] |

# FIG.77 TORQUE CONVERTER PRESSURE METER [TPM]

(F70226D0) トルクコンバータプレッシャメータ

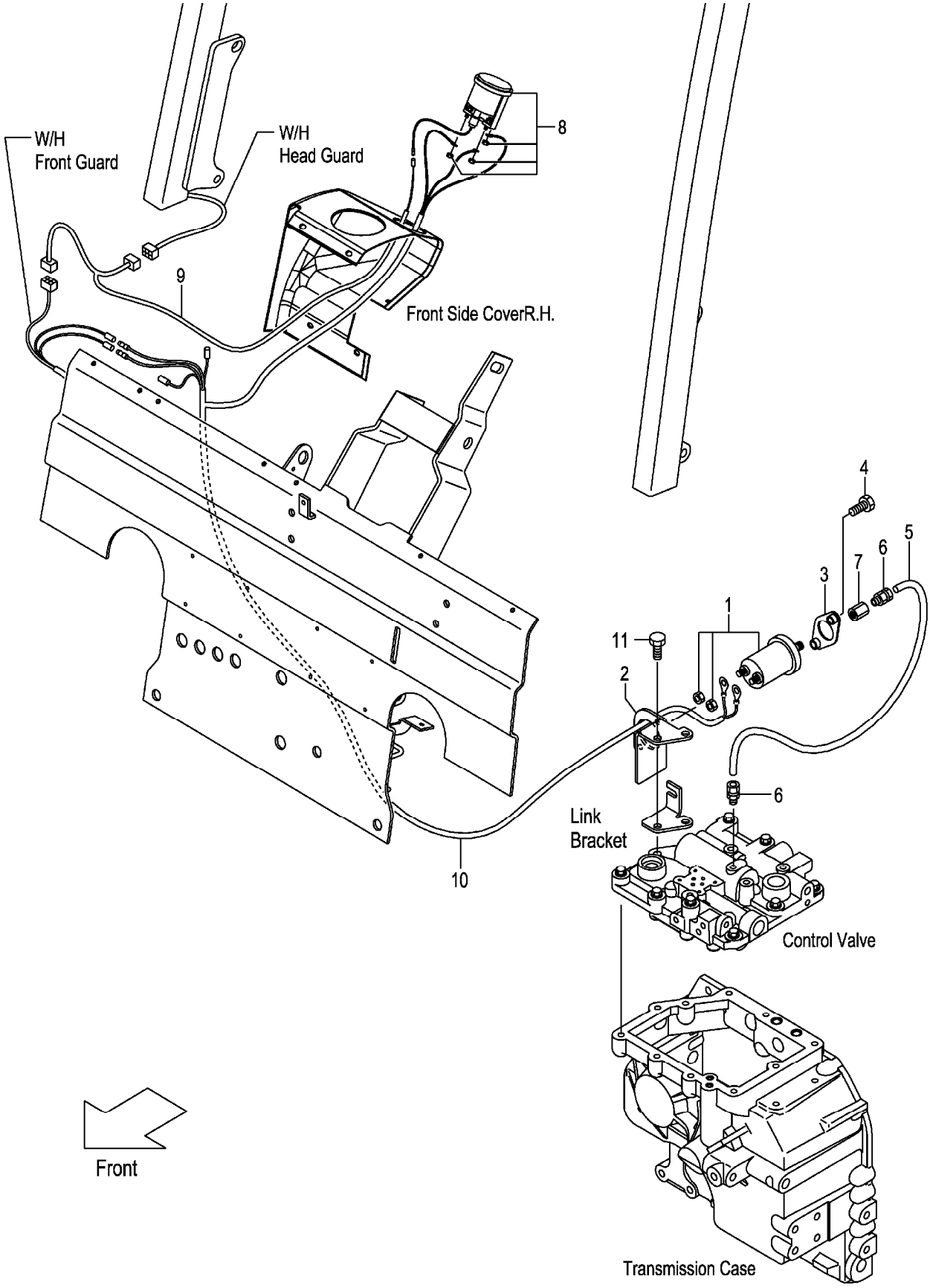

A:FG20T13 FG25T13 C:FD20T13 FD25T13
B:FG20T3 FG25T3 D:FD20T3 FD25T3

| Item No | Part No. | Mark | Description | | Req'd | Remarks : Serial No. |
|---|---|---|---|---|---|---|
| 1 | 516G6-92001 | | SENSOR,PRESS.GAUGE | ｾﾝｻ | 1 | [TPM] |
| 2 | 52N56-92101 | | BRACKET,SENSOR | ﾌﾞﾗｹｯﾄ | 1 | [TPM] |
| 3 | 516G6-92151 | | COVER,SENSOR | ｶﾊﾞｰ | 1 | [TPM] |
| 4 | 01186-08025 | | BOLT | ﾎﾞﾙﾄ | 2 | [TPM] |
| 5 | 52N56-92001 | | PIPE,CAPPER | ﾊﾟｲﾌﾟ | 1 | [TPM] |
| 6 | 516G6-92011 | | JOINT | ｼﾞｮｲﾝﾄ | 2 | [TPM] |
| 7 | 516G6-92031 | | ADAPTER | ｱﾀﾞﾌﾟﾀ | 1 | [TPM] |
| 8 | 516G6-92022 | | GAUGE,PRESSURE | ｹﾞｰｼﾞ | 1 | [TPM] |
| 9 | 52N56-92211 | | WIRE-HARNESS | ﾜｲﾔﾊｰﾈｽ | 1 | [TPM] |
| 10 | 52N56-92201 | | WIRE-HARNESS,TPM | ﾜｲﾔﾊｰﾈｽ | 1 | [TPM] |
| 11 | 01103-10035 | | BOLT | ﾎﾞﾙﾄ | 2 | [TPM] |

# FIG.78 SPEED DETECTOR UNIT [SAS]

(F70226E0) ｽﾋﾟｰﾄﾞﾃﾞｨﾃｸﾀﾕﾆｯﾄ

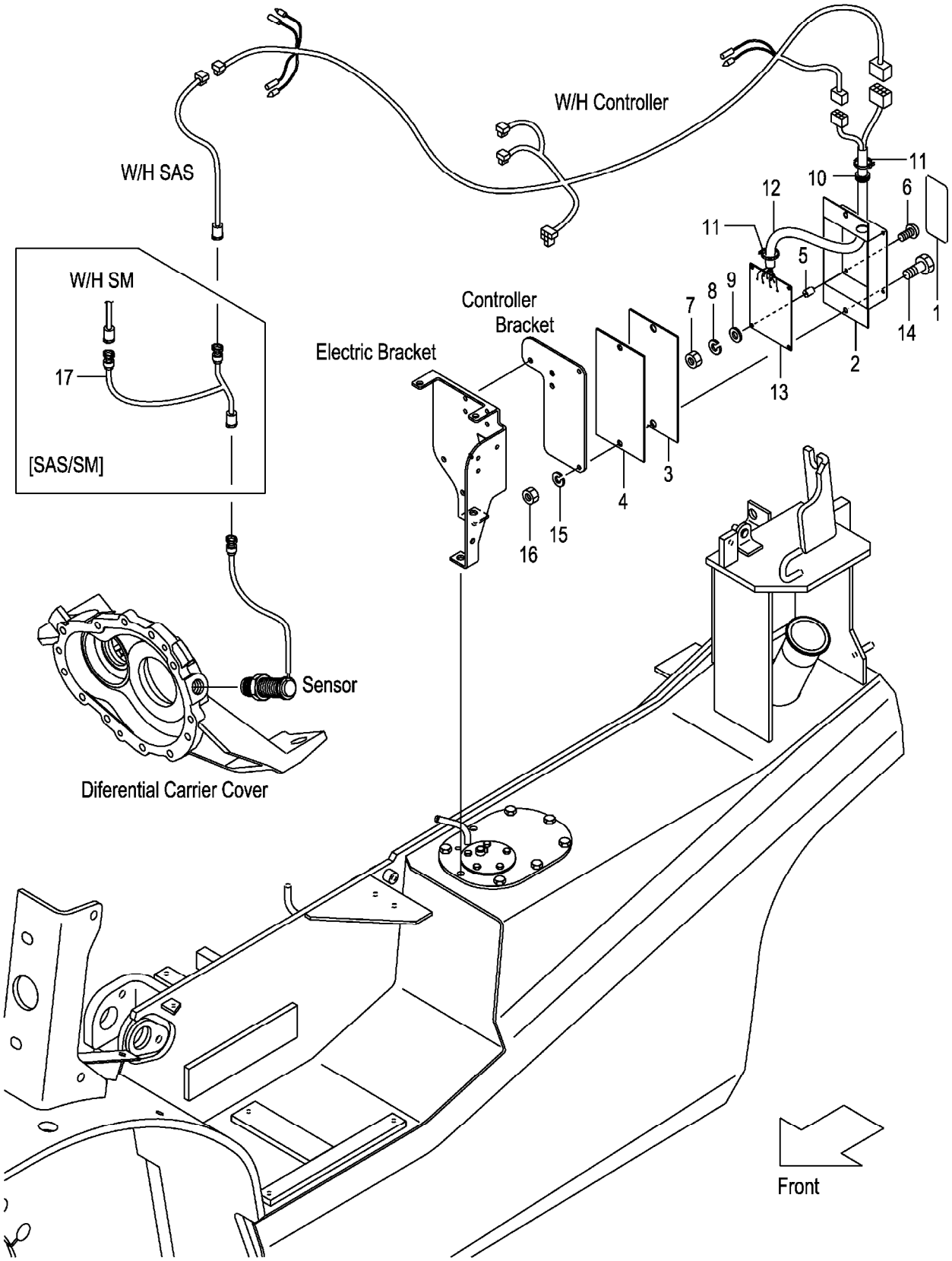

A:FG20C13 FG20T13 FG25C13 FG25T13 C:FD20C13 FD20T13 FD25C13 FD25T13
B:FG20C3 FG20T3 FG25C3 FG25T3 FG20W3 FG25W3 D:FD20C3 FD20T3 FD25C3 FD25T3 FD20W3 FD25W3

| Item No | Part No. | Mark | Description | Req'd | Remarks : Serial No. |
|---|---|---|---|---|---|
| A1 | 50B77-52051 | | UNIT-ASS'Y,SPEED-DETECTOR ｽﾋﾟｰﾄﾞﾃﾞﾃｸﾀﾕﾆｯﾄｱｯｾﾝ | 1 | A,B [SASB05][SASR05][SASC05] INC.1-16 |
| - | 52N57-52051 | | UNIT-ASS'Y,SPEED-DETECTOR ｽﾋﾟｰﾄﾞﾃﾞﾃｸﾀﾕﾆｯﾄｱｯｾﾝ | 1 | C,D [SASB05][SASR05][SASC05] INC.1-16 |
| - | 50B77-52101 | | UNIT-ASS'Y,SPEED-DETECTOR ｽﾋﾟｰﾄﾞﾃﾞﾃｸﾀﾕﾆｯﾄｱｯｾﾝ | 1 | A,B [SASB10][SASR10][SASC10] INC.1-16 |
| - | 52N57-52101 | | UNIT-ASS'Y,SPEED-DETECTOR ｽﾋﾟｰﾄﾞﾃﾞﾃｸﾀﾕﾆｯﾄｱｯｾﾝ | 1 | C,D [SASB10][SASR10][SASC10] INC.1-16 |
| - | 50B77-52151 | | UNIT-ASS'Y,SPEED-DETECTOR ｽﾋﾟｰﾄﾞﾃﾞﾃｸﾀﾕﾆｯﾄｱｯｾﾝ | 1 | A,B [SASB15][SASR15][SASC15] INC.1-16 |
| - | 52N57-52151 | | UNIT-ASS'Y,SPEED-DETECTOR ｽﾋﾟｰﾄﾞﾃﾞﾃｸﾀﾕﾆｯﾄｱｯｾﾝ | 1 | C,D [SASB15][SASR15][SASC15] INC.1-16 |
| 1 | 50B77-52061 | | PLATE,NAME ﾌﾟﾚｰﾄ | 1 | A,B [SASB05][SASR05][SASC05] |
| - | 52N57-52061 | | PLATE,NAME ﾌﾟﾚｰﾄ | 1 | C,D [SASB05][SASR05][SASC05] |
| - | 50B77-52111 | | PLATE,NAME ﾌﾟﾚｰﾄ | 1 | A,B [SASB10][SASR10][SASC10] |
| - | 52N57-52111 | | PLATE,NAME ﾌﾟﾚｰﾄ | 1 | C,D [SASB10][SASR10][SASC10] |
| - | 50B77-52161 | | PLATE,NAME ﾌﾟﾚｰﾄ | 1 | A,B [SASB15][SASR15][SASC15] |
| - | 52N57-52161 | | PLATE,NAME ﾌﾟﾚｰﾄ | 1 | C,D [SASB15][SASR15][SASC15] |
| 2 | 55792-52601 | | CASE ｹｰｽ | 1 | [SASB05&10&15][SASR05&10&15] [SASC05&10&15] |
| 3 | 55792-52611 | | SEAT,SPONG ｼｰﾄ | 1 | [SASB05&10&15][SASR05&10&15] [SASC05&10&15] |
| 4 | 55792-52621 | | PLATE ﾌﾟﾚｰﾄ | 1 | [SASB05&10&15][SASR05&10&15] [SASC05&10&15] |
| 5 | 27042-64311 | | SPACER ｽﾍﾟｰｻ | 4 | [SASB05&10&15][SASR05&10&15] [SASC05&10&15] |
| 6 | 01030-04020 | | SCREW ｽｸﾘｭ | 4 | [SASB05&10&15][SASR05&10&15] [SASC05&10&15] |
| 7 | 01400-00004 | | NUT ﾅｯﾄ | 4 | [SASB05&10&15][SASR05&10&15] [SASC05&10&15] |
| 8 | 02010-00004 | | WASHER ﾜｯｼｬ | 4 | [SASB05&10&15][SASR05&10&15] [SASC05&10&15] |
| 9 | 02000-00004 | | WASHER ﾜｯｼｬ | 4 | [SASB05&10&15][SASR05&10&15] [SASC05&10&15] |
| 10 | 205A2-63311 | | GROMMET ｸﾞﾛﾒｯﾄ | 1 | [SASB05&10&15][SASR05&10&15] [SASC05&10&15] |
| 11 | 27042-42312 | | BAND,CABLE ﾊﾞﾝﾄﾞ | 2 | [SASB05&10&15][SASR05&10&15] [SASC05&10&15] |

# FIG.78 SPEED DETECTOR UNIT [SAS]

(F70226E0) ｽﾋﾟｰﾄﾞﾃﾞｨﾃｸﾀﾕﾆｯﾄ

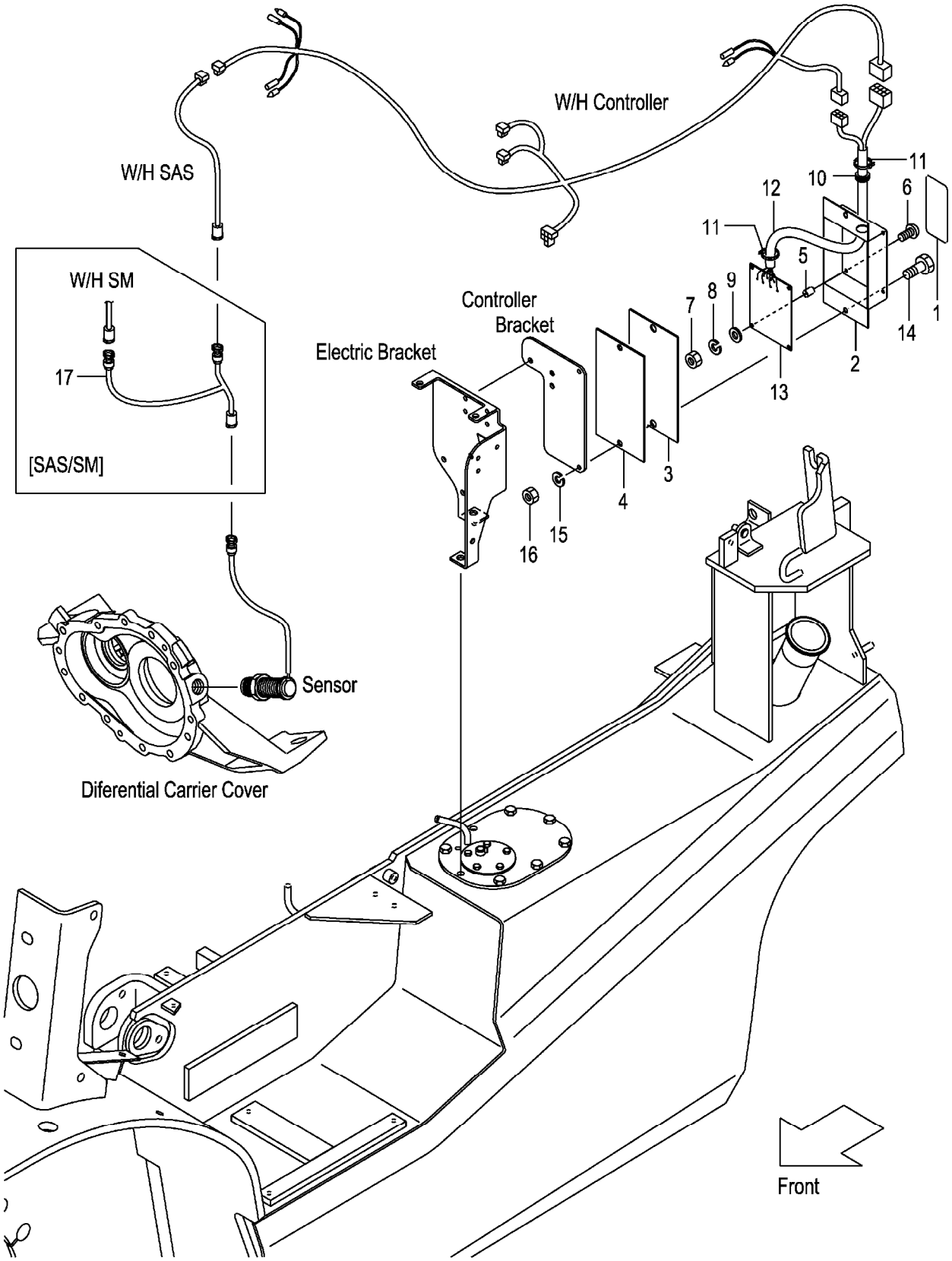

A:FG20C13 FG20T13 FG25C13 FG25T13 C:FD20C13 FD20T13 FD25C13 FD25T13 (F70226E0)
B:FG20C3 FG20T3 FG25C3 FG25T3 FG20W3 FG25W3 D:FD20C3 FD20T3 FD25C3 FD25T3 FD20W3 FD25W3

| Item No | Part No. | Mark | Description | | Req'd | Remarks : Serial No. |
|---|---|---|---|---|---|---|
| 12 | 55792-52641 | | WIRE-HARNESS,ATC | ﾜｲﾔﾊｰﾈｽ | 1 | [SASB05&10&15][SASR05&10&15] [SASC05&10&15] |
| 13 | 130C2-60302 | | BOARD,PRINTED | ﾎﾞｰﾄﾞ | 1 | [SASB05&10&15][SASR05&10&15] [SASC05&10&15] |
| 14 | 01100-06020 | | BOLT | ﾎﾞﾙﾄ | 2 | [SASB05&10&15][SASR05&10&15] [SASC05&10&15] |
| 15 | 02010-00006 | | WASHER | ﾜｯｼｬ | 2 | [SASB05&10&15][SASR05&10&15] [SASC05&10&15] |
| 16 | 01400-00006 | | NUT | ﾅｯﾄ | 2 | [SASB05&10&15][SASR05&10&15] [SASC05&10&15] |
| 17 | 539A7-52041 | | WIRE-HARNESS,SAS/SM | ﾜｲﾔﾊｰﾈｽ | 1 | [SAS/SM] |

# M E M O

# M E M O

# FIG.79 SPEED ALARM SYSTEM [SASB]

(F70226F0) ｽﾋﾟｰﾄﾞｱﾗｰﾑｼｽﾃﾑ

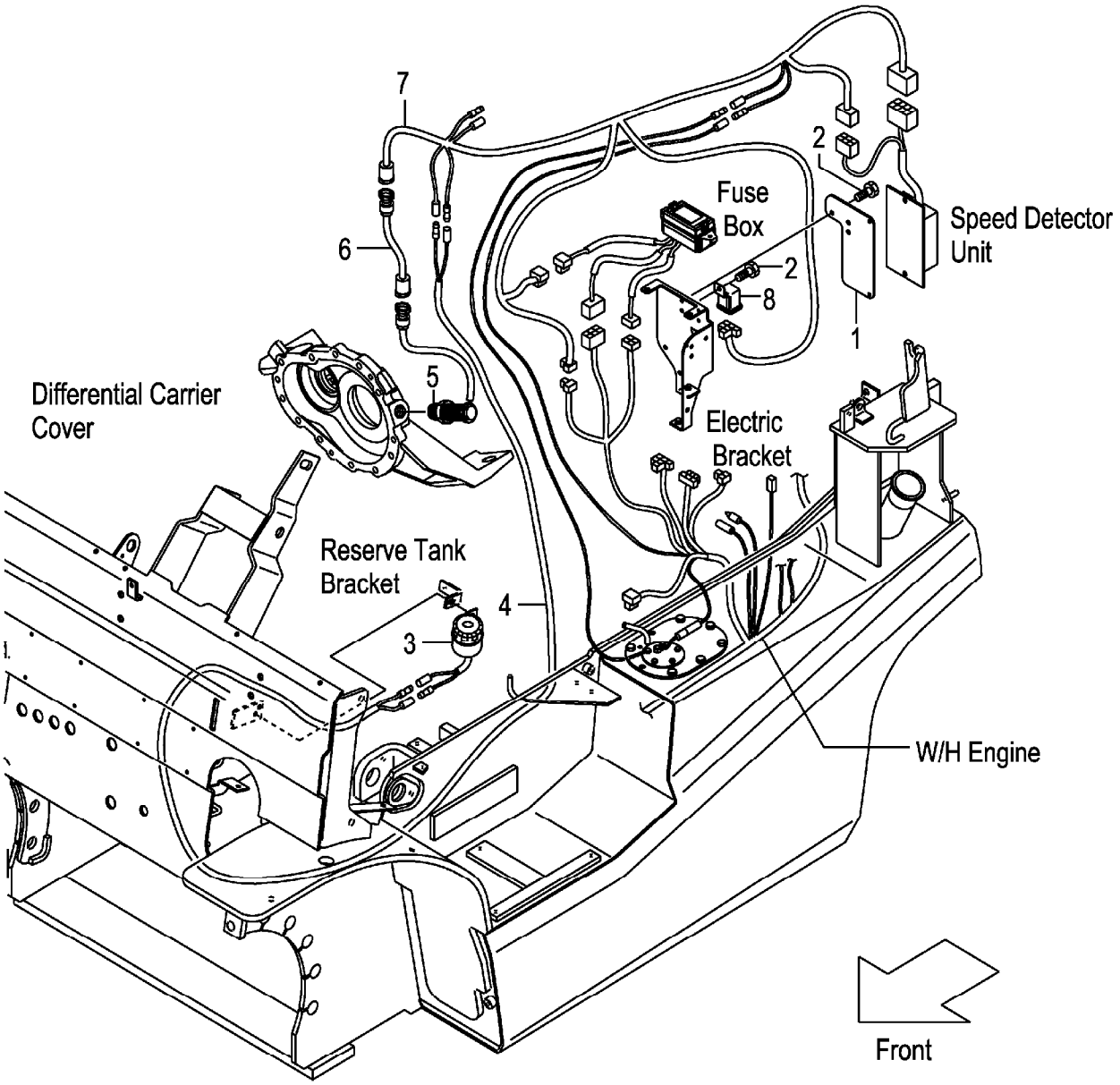

A:FG20C13 FG20T13 FG25C13 FG25T13 C:FD20C13 FD20T13 FD25C13 FD25T13 (F70226F0)
B:FG20C3 FG20T3 FG25C3 FG25T3 FG20W3 FG25W3 D:FD20C3 FD20T3 FD25C3 FD25T3 FD20W3 FD25W3

| Item No | Part No. | Mark | Description | | Req'd | Remarks : Serial No. |
|---|---|---|---|---|---|---|
| 1 | 52N57-52001 | | BRACKET,CONTROLLER | ﾌﾞﾗｹｯﾄ | 1 | [SASB05][SASB10][SASB15] |
| 2 | 214A2-42621 | | SCREW | ｽｸﾘｭ | 4 | [SASB05][SASB10][SASB15] |
| 3 | 529F7-52241 | | ALARM,BUZZER | ｱﾗｰﾑ | 1 | [SASB05][SASB10][SASB15] |
| 4 | 558A9-92001 | | WIRE-HARNESS,LICENCE | ﾜｲﾔﾊｰﾈｽ | 1 | [SASB05][SASB10][SASB15] |
| 5 | 16402-54331 | | SENSOR | ｾﾝｻ | 1 | [SASB05][SASB10][SASB15] |
| 6 | 534A7-50601 | | WIRE-HARNESS,SAS | ﾜｲﾔﾊｰﾈｽ | 1 | [SASB05][SASB10][SASB15] |
| 7 | 52N57-52031 | | WIRE-HARNESS,CONTROL | ﾜｲﾔﾊｰﾈｽ | 1 | [SASB05][SASB10][SASB15] |
| 8 | 26062-42881 | | RELAY,12V | ﾘﾚｰ | 1 | [SASB05][SASB10][SASB15] |

# FIG.80 SPEED ALARM SYSTEM [SASR]

(F70226G0) スピードアラームシステム

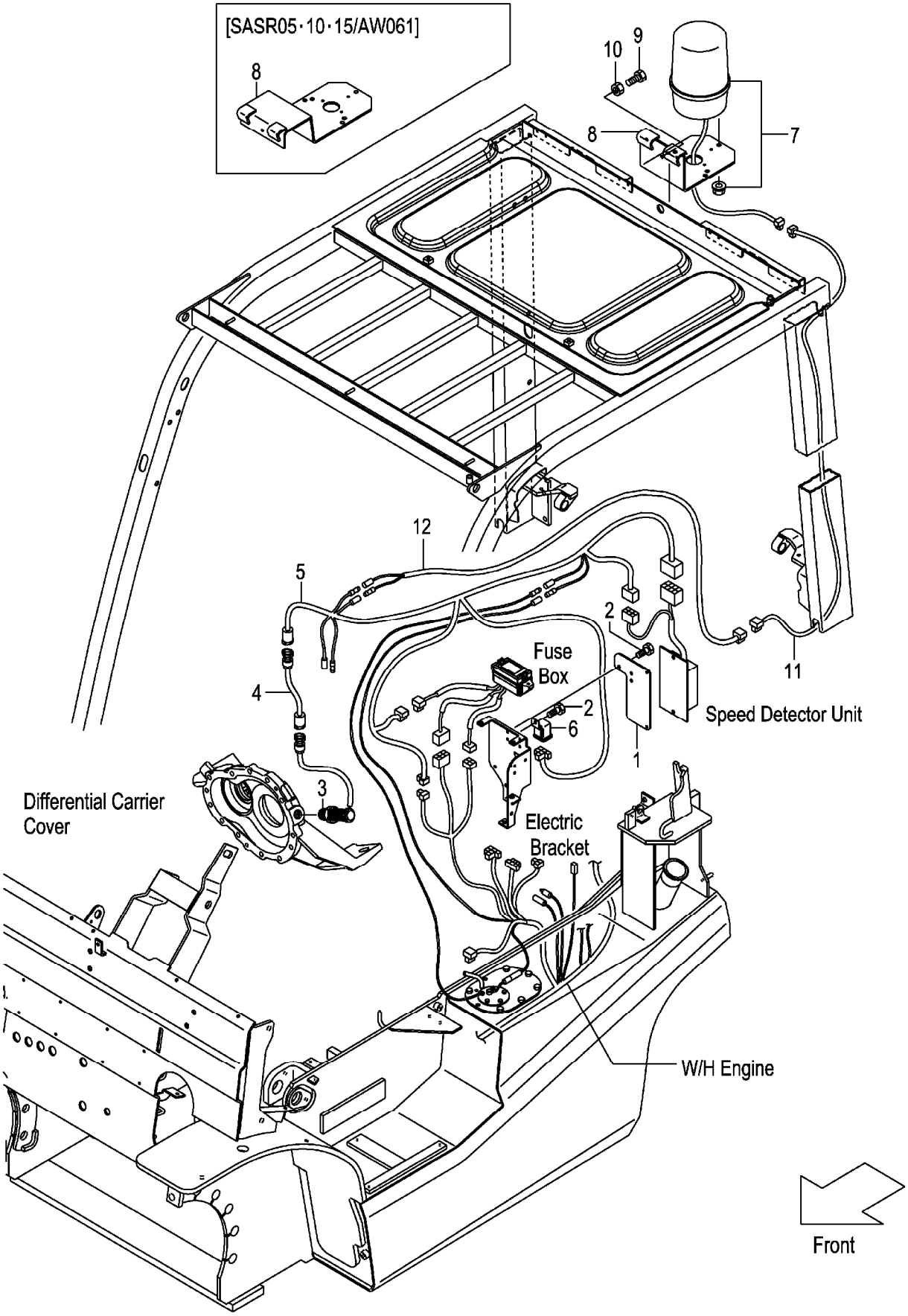

A:FG20C13 FG20T13 FG25C13 FG25T13 C:FD20C13 FD20T13 FD25C13 FD25T13 (F70226G0)
B:FG20C3 FG20T3 FG25C3 FG25T3 FG20W3 FG25W3 D:FD20C3 FD20T3 FD25C3 FD25T3 FD20W3 FD25W3

| Item No | Part No. | Mark | Description | | Req'd | Remarks : Serial No. |
|---|---|---|---|---|---|---|
| 1 | 52N57-52001 | | BRACKET,CONTROLLER | ﾌﾞﾗｹｯﾄ | 1 | [SASR05][SASR10][SASR15] |
| 2 | 214A2-42621 | | SCREW | ｽｸﾘｭ | 4 | [SASR05][SASR10][SASR15] |
| 3 | 16402-54331 | | SENSOR | ｾﾝｻ | 1 | [SASR05][SASR10][SASR15] |
| 4 | 534A7-50601 | | WIRE-HARNESS,SAS | ﾜｲﾔﾊｰﾈｽ | 1 | [SASR05][SASR10][SASR15] |
| 5 | 52N57-52031 | | WIRE-HARNESS,CONTROL | ﾜｲﾔﾊｰﾈｽ | 1 | [SASR05][SASR10][SASR15] |
| 6 | 26062-42881 | | RELAY,12V | ﾘﾚｰ | 1 | [SASR05][SASR10][SASR15] |
| 7 | 514A1-41001 | | LIGHT,REVOLVING | ﾗｲﾄ | 1 | [SASR05][SASR10][SASR15] |
| 8 | 529F1-42251 | | BRACKET,REVOLVING | ﾌﾞﾗｹｯﾄ | 1 | [SASR05][SASR10][SASR15] |
| - | 539A8-92251 | | BRACKET,REVOLVING | ﾌﾞﾗｹｯﾄ | 1 | [SASR05/AW061][SASR10/AW061] [SASR15/AW061] |
| 9 | 01100-08020 | | BOLT | ﾎﾞﾙﾄ | 3 | [SASR05][SASR10][SASR15] |
| 10 | 01400-00008 | | NUT | ﾅｯﾄ | 3 | [SASR05][SASR10][SASR15] |
| 11 | 52N58-92021 | | WIRE,LEAD | ﾜｲﾔ | 1 | [SASR05][SASR10][SASR15] |
| 12 | 539A7-52101 | | WIRE,LEAD | ﾜｲﾔ | 1 | [SASR05][SASR10][SASR15] |

# FIG.81 SPEED ALARM SYSTEM [SASC]

(F70226H0) スピードアラームシステム

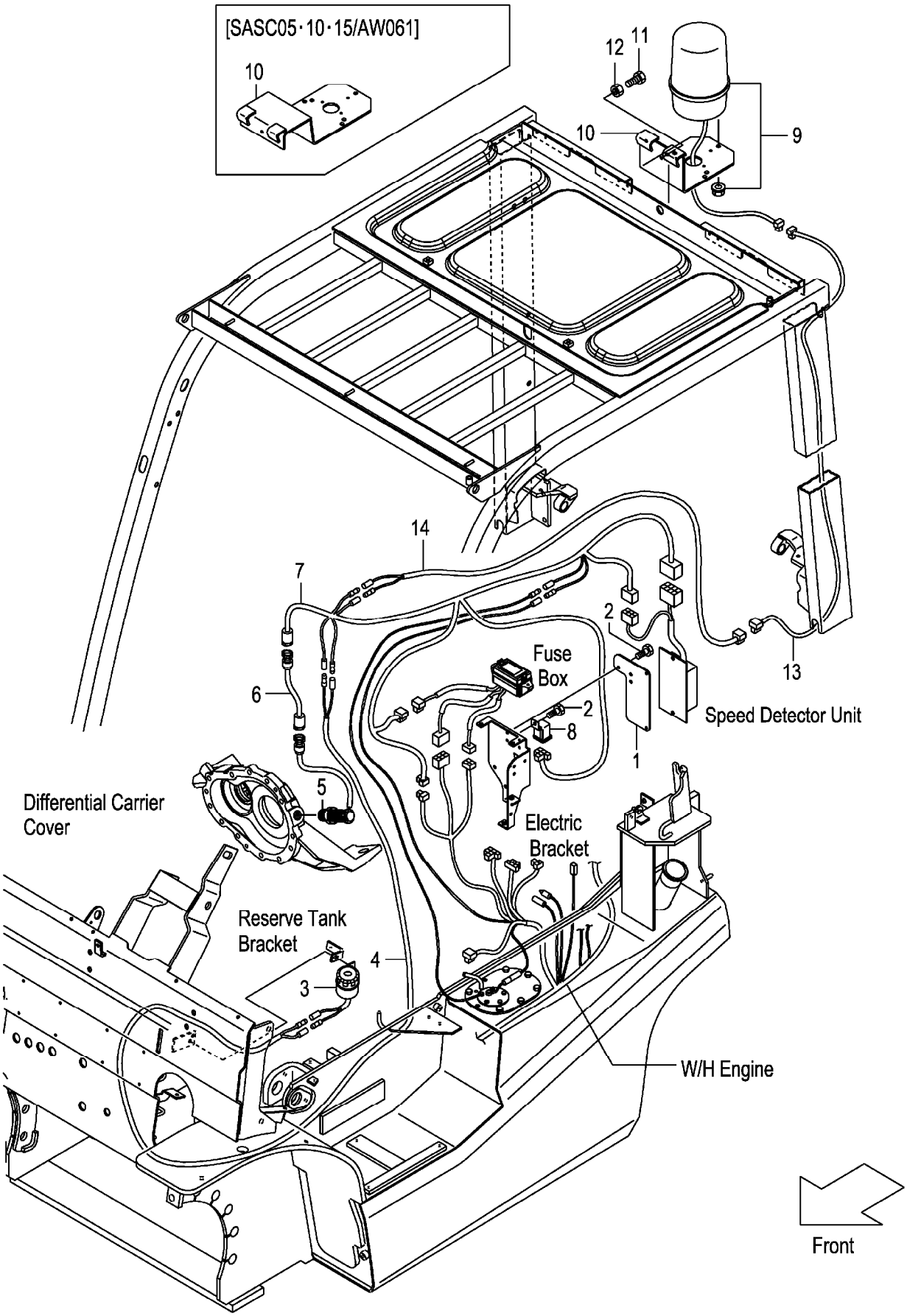

A:FG20C13 FG20T13 FG25C13 FG25T13 C:FD20C13 FD20T13 FD25C13 FD25T13 (F70226H0)
B:FG20C3 FG20T3 FG25C3 FG25T3 FG20W3 FG25W3 D:FD20C3 FD20T3 FD25C3 FD25T3 FD20W3 FD25W3

| Item No | Part No. | Mark | Description | | Req'd | Remarks : Serial No. |
|---|---|---|---|---|---|---|
| 1 | 52N57-52001 | | BRACKET,CONTROLLER | ﾌﾞﾗｹｯﾄ | 1 | [SASC05][SASC10][SASC15] |
| 2 | 214A2-42621 | | SCREW | ｽｸﾘｭ | 4 | [SASC05][SASC10][SASC15] |
| 3 | 529F7-52241 | | ALARM,BUZZER | ｱﾗｰﾑ | 1 | [SASC05][SASC10][SASC15] |
| 4 | 558A9-92001 | | WIRE-HARNESS,LICENCE | ﾜｲﾔﾊｰﾈｽ | 1 | [SASC05][SASC10][SASC15] |
| 5 | 16402-54331 | | SENSOR | ｾﾝｻ | 1 | [SASC05][SASC10][SASC15] |
| 6 | 534A7-50601 | | WIRE-HARNESS,SAS | ﾜｲﾔﾊｰﾈｽ | 1 | [SASC05][SASC10][SASC15] |
| 7 | 52N57-52031 | | WIRE-HARNESS,CONTROL | ﾜｲﾔﾊｰﾈｽ | 1 | [SASC05][SASC10][SASC15] |
| 8 | 26062-42881 | | RELAY,12V | ﾘﾚｰ | 1 | [SASC05][SASC10][SASC15] |
| 9 | 514A1-41001 | | LIGHT,REVOLVING | ﾗｲﾄ | 1 | [SASC05][SASC10][SASC15] |
| 10 | 529F1-42251 | | BRACKET,REVOLVING | ﾌﾞﾗｹｯﾄ | 1 | [SASC05][SASC10][SASC15] |
| - | 539A8-92251 | | BRACKET,REVOLVING | ﾌﾞﾗｹｯﾄ | 1 | [SASC05/AW061][SASC10/AW061] [SASC15/AW061] |
| 11 | 01100-08020 | | BOLT | ﾎﾞﾙﾄ | 3 | [SASC05][SASC10][SASC15] |
| 12 | 01400-00008 | | NUT | ﾅｯﾄ | 3 | [SASC05][SASC10][SASC15] |
| 13 | 52N58-92021 | | WIRE,LEAD | ﾜｲﾔ | 1 | [SASC05][SASC10][SASC15] |
| 14 | 539A7-52101 | | WIRE,LEAD | ﾜｲﾔ | 1 | [SASC05][SASC10][SASC15] |

# FIG.82 OK MONITOR [OKM]

(F70226J0) **OKモニタ**

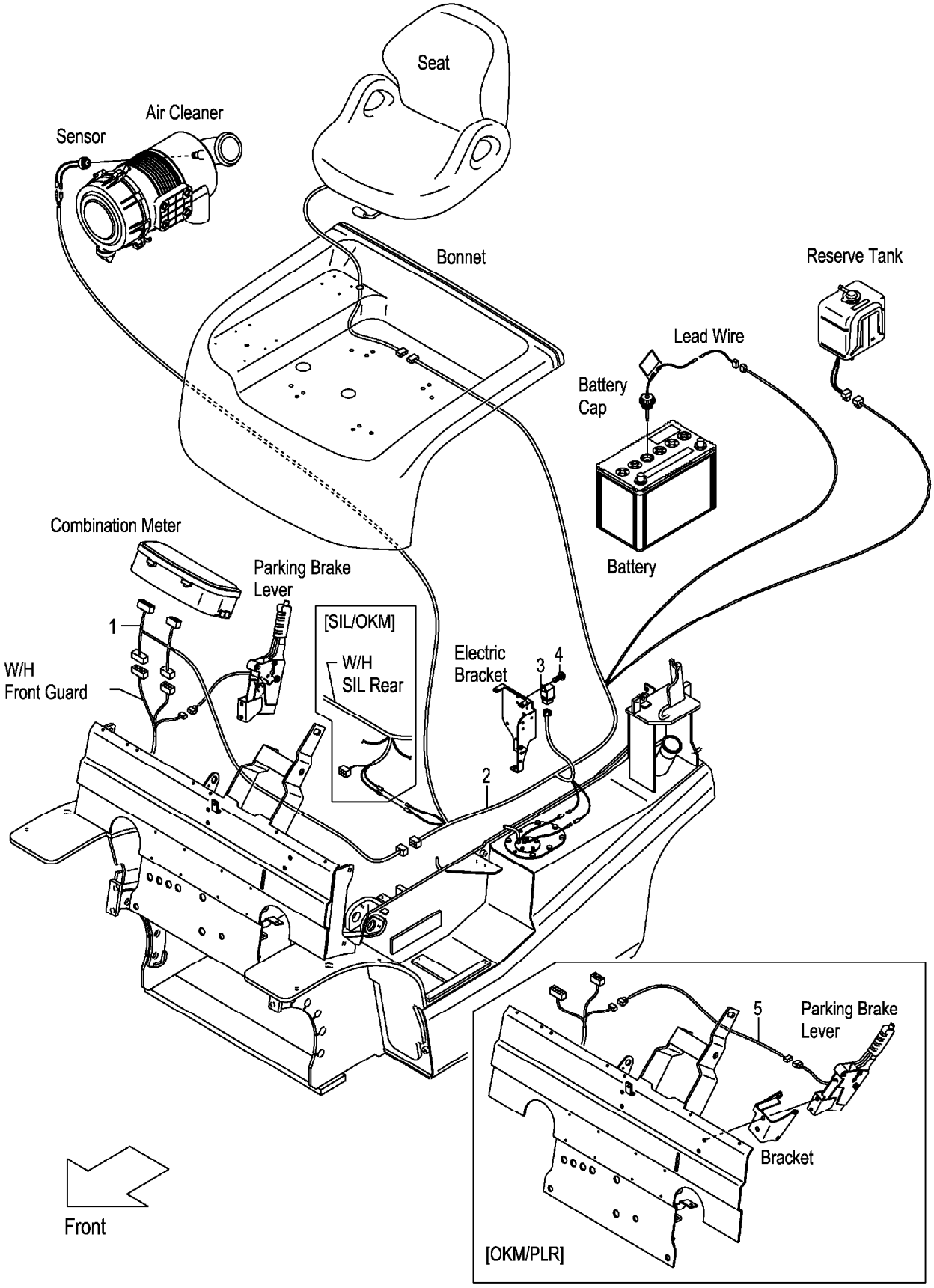

A:FG20C13 FG20T13 FG25C13 FG25T13 C:FD20C13 FD20T13 FD25C13 FD25T13 (F70226J0)
B:FG20C3 FG20T3 FG25C3 FG25T3 FG20W3 FG25W3 D:FD20C3 FD20T3 FD25C3 FD25T3 FD20W3 FD25W3

| Item No | Part No. | Mark | Description | | Req'd | Remarks : Serial No. |
|---|---|---|---|---|---|---|
| 1 | 52N56-22021 | | WIRE,LEAD,OKM | ﾜｲﾔ | 1 | [OKM] |
| 2 | 52N56-22011 | | WIRE-HARNESS,OKM | ﾜｲﾔﾊｰﾈｽ | 1 | [OKM] |
| 3 | 26062-42881 | | RELAY,12V | ﾘﾚｰ | 1 | [OKM] |
| 4 | 214A2-42611 | | SCREW | ｽｸﾘｭ | 1 | [OKM] |
| 5 | 52N56-22401 | | WIRE-HARNESS,SWITCH | ﾜｲﾔﾊｰﾈｽ | 1 | [OKM/PLR] |

# INTERLOCK
# FIG.83 (GASOLINE:CLUTCH & OIL CLUTCH)[SIL][EXE][EXN]

(F70226K0) インターロック

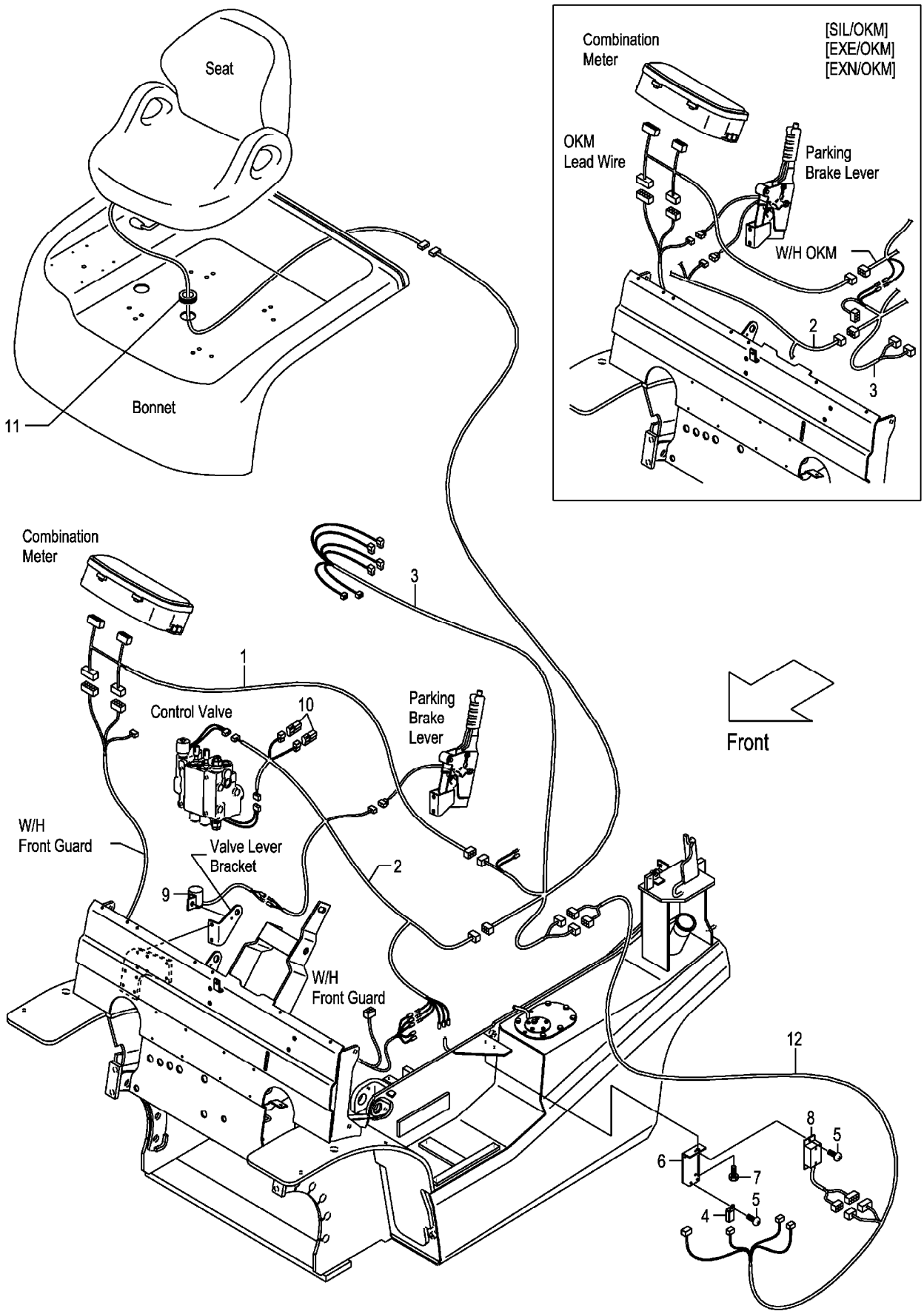

A:FG20C13 FG25C13
B:FG20C3 FG25C3
C:FG20W3 FG25W3

**FIG.83**
(F70226K0)

| Item No | Part No. | Mark | Description | | Req'd | Remarks : Serial No. |
|---|---|---|---|---|---|---|
| 1 | 52N56-22021 | | WIRE,LEAD,OKM | ﾜｲﾔ | 1 | [SIL](WITHOUT SIL/OKM) |
| - | 52N56-22021 | | WIRE,LEAD,OKM | ﾜｲﾔ | 1 | B |
| | | | | | | [EXE][EXN] |
| | | | | | | (WITHOUT EXE/OKM,EXN/OKM) |
| 2 | 52N57-E2001 | | WIRE-HARNESS,SIL,F | ﾜｲﾔﾊｰﾈｽ | 1 | [SIL] |
| - | 52N57-E2001 | | WIRE-HARNESS,SIL,F | ﾜｲﾔﾊｰﾈｽ | 1 | B |
| | | | | | | [EXE][EXN] |
| 3 | 52N57-E2011 | | WIRE-HARNESS,SIL,R | ﾜｲﾔﾊｰﾈｽ | 1 | [SIL] |
| - | 52N57-E2011 | | WIRE-HARNESS,SIL,R | ﾜｲﾔﾊｰﾈｽ | 1 | B |
| | | | | | | [EXE][EXN] |
| 4 | 209K2-42351 | | RELAY,1A | ﾘﾚｰ | 1 | [SIL] |
| - | 209K2-42351 | | RELAY,1A | ﾘﾚｰ | 1 | B |
| | | | | | | [EXE][EXN] |
| 5 | 214A2-42611 | | SCREW | ｽｸﾘｭ | 3 | [SIL] |
| - | 214A2-42611 | | SCREW | ｽｸﾘｭ | 3 | B |
| | | | | | | [EXE][EXN] |
| 6 | 52N57-E2201 | | BRACKET,RELAY | ﾌﾞﾗｹｯﾄ | 1 | [SIL] |
| - | 52N57-E2201 | | BRACKET,RELAY | ﾌﾞﾗｹｯﾄ | 1 | B |
| | | | | | | [EXE][EXN] |
| 7 | 01185-08012 | | BOLT | ﾎﾞﾙﾄ | 1 | [SIL] |
| - | 01185-08012 | | BOLT | ﾎﾞﾙﾄ | 1 | B |
| | | | | | | [EXE][EXN] |
| 8 | 247C2-43301 | | TIMER | ﾀｲﾏ | 1 | [SIL] |
| - | 247C2-43301 | | TIMER | ﾀｲﾏ | 1 | B |
| | | | | | | [EXE][EXN] |
| 9 | 247C2-43601 | | BUZZER | ﾌﾞｻﾞｰ | 1 | [SIL] |
| - | 247C2-43601 | | BUZZER | ﾌﾞｻﾞｰ | 1 | B |
| | | | | | | [EXE][EXN] |
| 10 | 230C2-42201 | | DIODE,3A | ﾀﾞｲｵｰﾄﾞ | 2 | [SIL] |
| - | 230C2-42201 | | DIODE,3A | ﾀﾞｲｵｰﾄﾞ | 2 | B |
| | | | | | | [EXE][EXN] |
| 11 | 27682-62131 | | GROMMET | ｸﾞﾛﾒｯﾄ | 1 | [SIL] |
| - | 27682-62131 | | GROMMET | ｸﾞﾛﾒｯﾄ | 1 | B |
| | | | | | | [EXE][EXN] |
| 12 | 246B2-43221 | | WIRE,LEAD,SIL | ﾜｲﾔ | 1 | [SIL] |
| - | 246B2-43221 | | WIRE,LEAD,SIL | ﾜｲﾔ | 1 | B |
| | | | | | | [EXE][EXN] |

# FIG.84 INTERLOCK (GASOLINE:TOR-CON)[SIL][EXE][EXN]

(F70226L0) インターロック

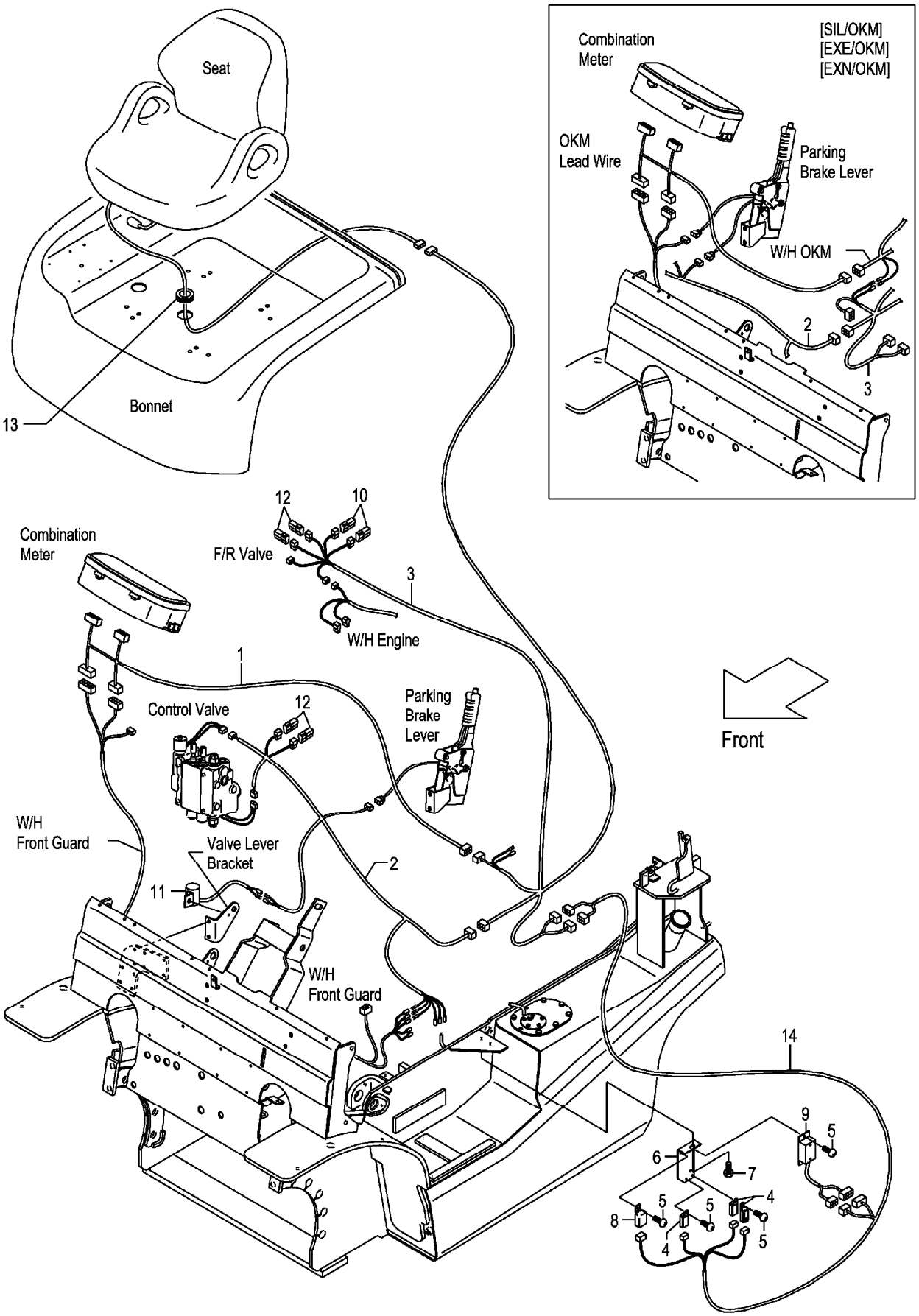

A:FG20T13 FG25T13
B:FG20T3 FG25T3

| Item No | Part No. | Mark | Description | | Req'd | Remarks : Serial No. |
|---|---|---|---|---|---|---|
| 1 | 52N56-22021 | | WIRE,LEAD,OKM | ﾜｲﾔ | 1 | [SIL](WITHOUT SIL/OKM) |
| - | 52N56-22021 | | WIRE,LEAD,OKM | ﾜｲﾔ | 1 | B |
| | | | | | | [EXE][EXN] |
| | | | | | | (WITHOUT EXE/OKM,EXN/OKM) |
| 2 | 52N57-E2001 | | WIRE-HARNESS,SIL,F | ﾜｲﾔﾊｰﾈｽ | 1 | [SIL] |
| - | 52N57-E2001 | | WIRE-HARNESS,SIL,F | ﾜｲﾔﾊｰﾈｽ | 1 | B |
| | | | | | | [EXE][EXN] |
| 3 | 52N57-E2011 | | WIRE-HARNESS,SIL,R | ﾜｲﾔﾊｰﾈｽ | 1 | [SIL] |
| - | 52N57-E2011 | | WIRE-HARNESS,SIL,R | ﾜｲﾔﾊｰﾈｽ | 1 | B |
| | | | | | | [EXE][EXN] |
| 4 | 209K2-42351 | | RELAY,1A | ﾘﾚｰ | 3 | [SIL] |
| - | 209K2-42351 | | RELAY,1A | ﾘﾚｰ | 3 | B |
| | | | | | | [EXE][EXN] |
| 5 | 214A2-42611 | | SCREW | ｽｸﾘｭ | 5 | [SIL] |
| - | 214A2-42611 | | SCREW | ｽｸﾘｭ | 5 | B |
| | | | | | | [EXE][EXN] |
| 6 | 52N57-E2201 | | BRACKET,RELAY | ﾌﾞﾗｹｯﾄ | 1 | [SIL] |
| - | 52N57-E2201 | | BRACKET,RELAY | ﾌﾞﾗｹｯﾄ | 1 | B |
| | | | | | | [EXE][EXN] |
| 7 | 01185-08012 | | BOLT | ﾎﾞﾙﾄ | 1 | [SIL] |
| - | 01185-08012 | | BOLT | ﾎﾞﾙﾄ | 1 | B |
| | | | | | | [EXE][EXN] |
| 8 | 247C2-43501 | | RELAY,1C | ﾘﾚｰ | 1 | [SIL] |
| - | 247C2-43501 | | RELAY,1C | ﾘﾚｰ | 1 | B |
| | | | | | | [EXE][EXN] |
| 9 | 247C2-43301 | | TIMER | ﾀｲﾏ | 1 | [SIL] |
| - | 247C2-43301 | | TIMER | ﾀｲﾏ | 1 | B |
| | | | | | | [EXE][EXN] |
| 10 | 21152-42091 | | DIODE,1A | ﾀﾞｲｵｰﾄﾞ | 2 | [SIL] |
| - | 21152-42091 | | DIODE,1A | ﾀﾞｲｵｰﾄﾞ | 2 | B |
| | | | | | | [EXE][EXN] |
| 11 | 247C2-43601 | | BUZZER | ﾌﾞｻﾞｰ | 1 | [SIL] |
| - | 247C2-43601 | | BUZZER | ﾌﾞｻﾞｰ | 1 | B |
| | | | | | | [EXE][EXN] |
| 12 | 230C2-42201 | | DIODE,3A | ﾀﾞｲｵｰﾄﾞ | 4 | [SIL] |
| - | 230C2-42201 | | DIODE,3A | ﾀﾞｲｵｰﾄﾞ | 4 | B |
| | | | | | | [EXE][EXN] |
| 13 | 27682-62131 | | GROMMET | ｸﾞﾛﾒｯﾄ | 1 | [SIL] |
| - | 27682-62131 | | GROMMET | ｸﾞﾛﾒｯﾄ | 1 | B |
| | | | | | | [EXE][EXN] |
| 14 | 246B2-43221 | | WIRE,LEAD,SIL | ﾜｲﾔ | 1 | [SIL] |
| - | 246B2-43221 | | WIRE,LEAD,SIL | ﾜｲﾔ | 1 | B |
| | | | | | | [EXE][EXN] |

# INTERLOCK
# FIG.85 (DIESEL:CLUTCH & OIL CLUTCH)[SIL][EXE][EXN]

(F70226M0) インターロック

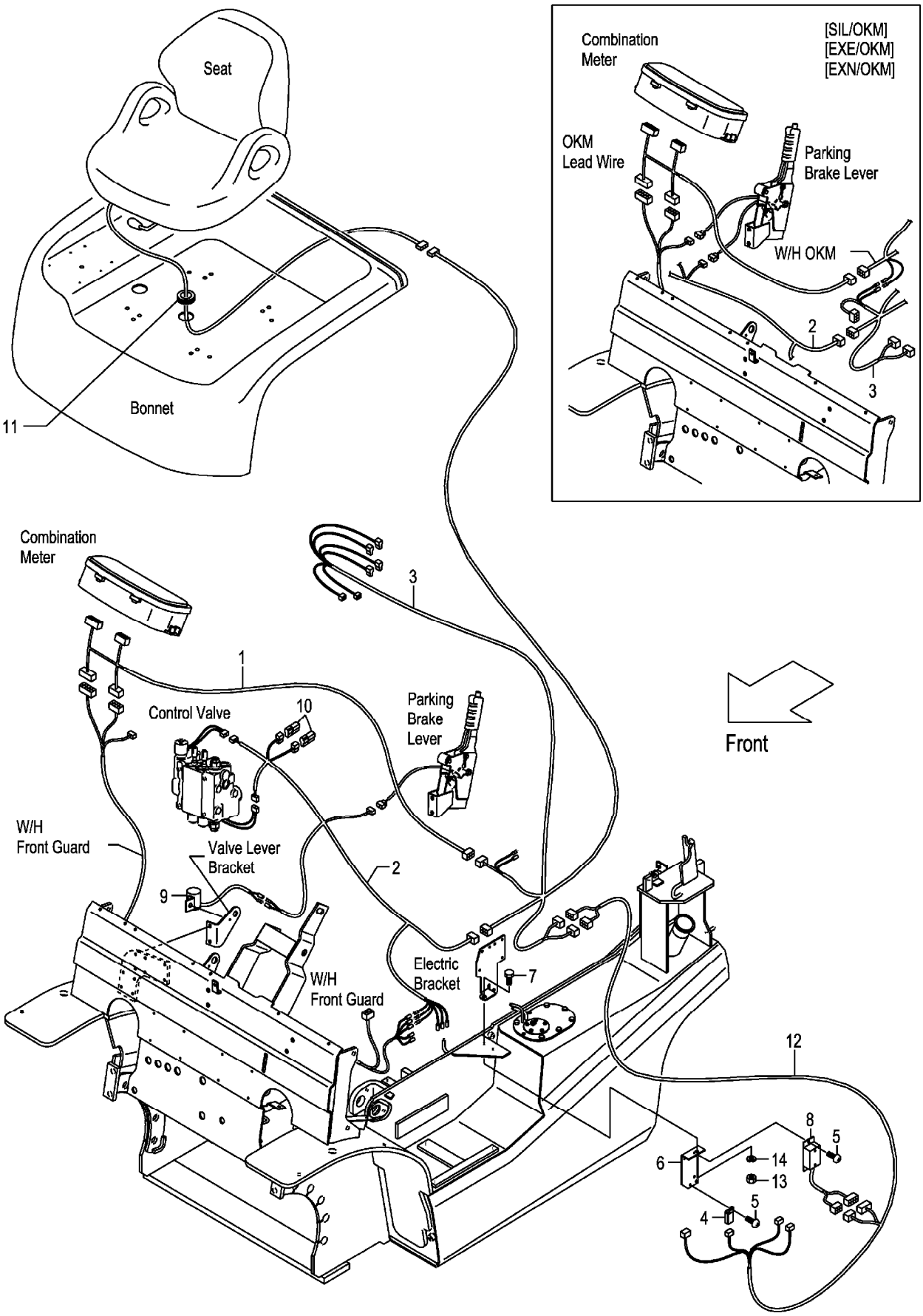

A:FD20C13 FD25C13
B:FD20C3 FD25C3
C:FD20W3 FD25W3

**FIG.85**
(F70226M0)

| Item No | Part No. | Mark | Description | | Req'd | Remarks : Serial No. |
|---|---|---|---|---|---|---|
| 1 | 52N56-22021 | | WIRE,LEAD,OKM | ﾜｲﾔ | 1 | [SIL](WITHOUT SIL/OKM) |
| - | 52N56-22021 | | WIRE,LEAD,OKM | ﾜｲﾔ | 1 | B |
| | | | | | | [EXE][EXN] |
| | | | | | | (WITHOUT EXE/OKM,EXN/OKM) |
| 2 | 52N57-E2001 | | WIRE-HARNESS,SIL,F | ﾜｲﾔﾊｰﾈｽ | 1 | [SIL] |
| - | 52N57-E2001 | | WIRE-HARNESS,SIL,F | ﾜｲﾔﾊｰﾈｽ | 1 | B |
| | | | | | | [EXE][EXN] |
| 3 | 52N57-E2011 | | WIRE-HARNESS,SIL,R | ﾜｲﾔﾊｰﾈｽ | 1 | [SIL] |
| - | 52N57-E2011 | | WIRE-HARNESS,SIL,R | ﾜｲﾔﾊｰﾈｽ | 1 | B |
| | | | | | | [EXE][EXN] |
| 4 | 209K2-42351 | | RELAY,1A | ﾘﾚｰ | 1 | [SIL] |
| - | 209K2-42351 | | RELAY,1A | ﾘﾚｰ | 1 | B |
| | | | | | | [EXE][EXN] |
| 5 | 214A2-42611 | | SCREW | ｽｸﾘｭ | 3 | [SIL] |
| - | 214A2-42611 | | SCREW | ｽｸﾘｭ | 3 | B |
| | | | | | | [EXE][EXN] |
| 6 | 52N57-E2201 | | BRACKET,RELAY | ﾌﾞﾗｹｯﾄ | 1 | [SIL] |
| - | 52N57-E2201 | | BRACKET,RELAY | ﾌﾞﾗｹｯﾄ | 1 | B |
| | | | | | | [EXE][EXN] |
| 7 | 01185-08025 | | BOLT | ﾎﾞﾙﾄ | 1 | [SIL] |
| - | 01185-08025 | | BOLT | ﾎﾞﾙﾄ | 1 | B |
| | | | | | | [EXE][EXN] |
| 8 | 247C2-43301 | | TIMER | ﾀｲﾏ | 1 | [SIL] |
| - | 247C2-43301 | | TIMER | ﾀｲﾏ | 1 | B |
| | | | | | | [EXE][EXN] |
| 9 | 247C2-43601 | | BUZZER | ﾌﾞｻﾞｰ | 1 | [SIL] |
| - | 247C2-43601 | | BUZZER | ﾌﾞｻﾞｰ | 1 | B |
| | | | | | | [EXE][EXN] |
| 10 | 230C2-42201 | | DIODE,3A | ﾀﾞｲｵｰﾄﾞ | 2 | [SIL] |
| - | 230C2-42201 | | DIODE,3A | ﾀﾞｲｵｰﾄﾞ | 2 | B |
| | | | | | | [EXE][EXN] |
| 11 | 27682-62131 | | GROMMET | ｸﾞﾛﾒｯﾄ | 1 | [SIL] |
| - | 27682-62131 | | GROMMET | ｸﾞﾛﾒｯﾄ | 1 | B |
| | | | | | | [EXE][EXN] |
| 12 | 246B2-43221 | | WIRE,LEAD,SIL | ﾜｲﾔ | 1 | [SIL] |
| - | 246B2-43221 | | WIRE,LEAD,SIL | ﾜｲﾔ | 1 | B |
| | | | | | | [EXE][EXN] |
| 13 | 01400-00008 | | NUT | ﾅｯﾄ | 1 | [SIL] |
| - | 01400-00008 | | NUT | ﾅｯﾄ | 1 | B |
| | | | | | | [EXE][EXN] |
| 14 | 02010-00008 | | WASHER | ﾜｯｼｬ | 1 | [SIL] |
| - | 02010-00008 | | WASHER | ﾜｯｼｬ | 1 | B |
| | | | | | | [EXE][EXN] |

# FIG.86 INTERLOCK (DIESEL:TOR-CON)[SIL][EXE][EXN]

(F70226N0) インターロック

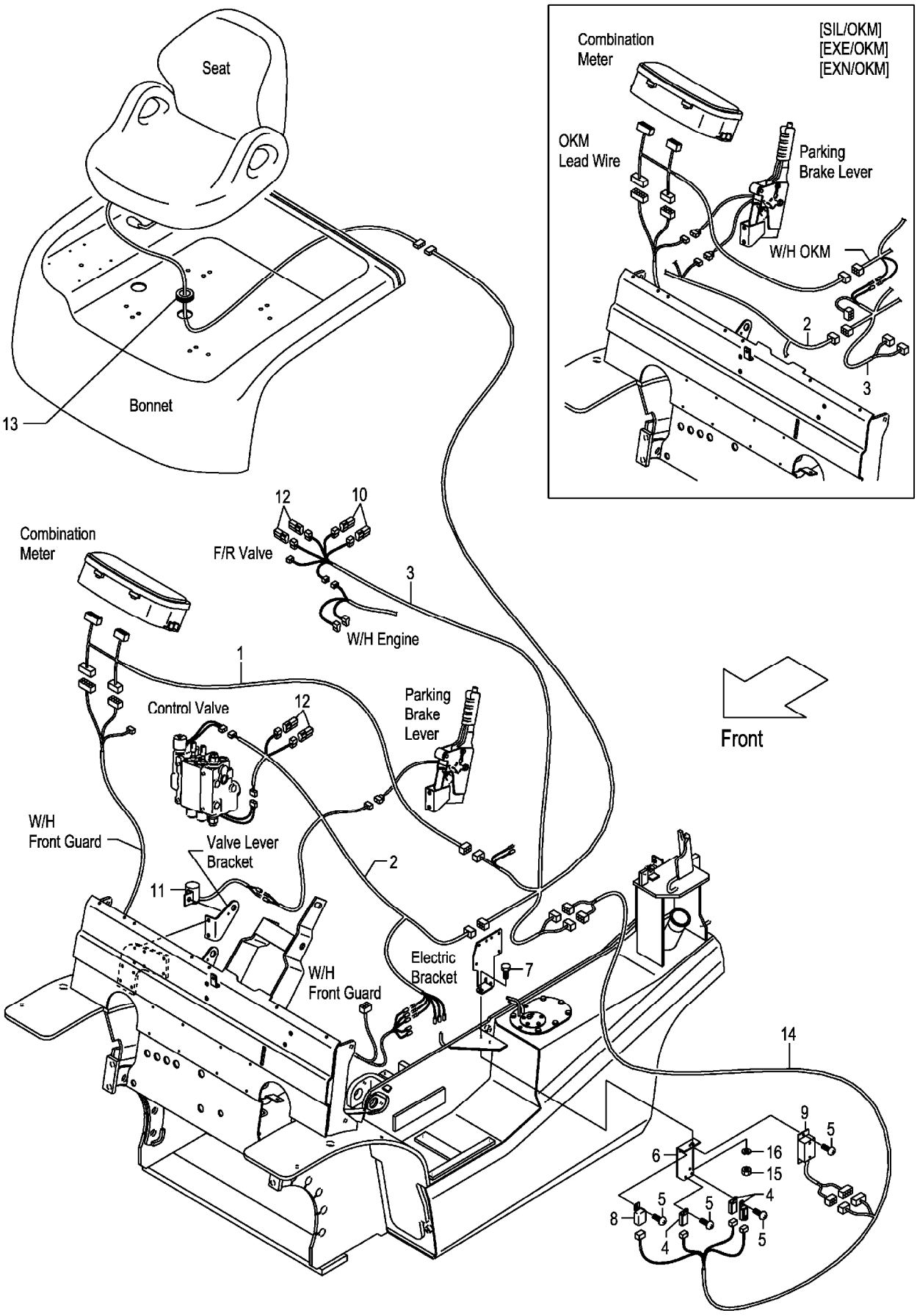

A:FD20T13 FD25T13
B:FD20T3 FD25T3

| Item No | Part No. | Mark | Description | | Req'd | Remarks : Serial No. |
|---|---|---|---|---|---|---|
| 1 | 52N56-22021 | | WIRE,LEAD,OKM | ﾜｲﾔ | 1 | [SIL](WITHOUT SIL/OKM) |
| - | 52N56-22021 | | WIRE,LEAD,OKM | ﾜｲﾔ | 1 | B |
| | | | | | | [EXE][EXN] |
| | | | | | | (WITHOUT EXE/OKM,EXN/OKM) |
| 2 | 52N57-E2001 | | WIRE-HARNESS,SIL,F | ﾜｲﾔﾊｰﾈｽ | 1 | [SIL] |
| - | 52N57-E2001 | | WIRE-HARNESS,SIL,F | ﾜｲﾔﾊｰﾈｽ | 1 | B |
| | | | | | | [EXE][EXN] |
| 3 | 52N57-E2011 | | WIRE-HARNESS,SIL,R | ﾜｲﾔﾊｰﾈｽ | 1 | [SIL] |
| - | 52N57-E2011 | | WIRE-HARNESS,SIL,R | ﾜｲﾔﾊｰﾈｽ | 1 | B |
| | | | | | | [EXE][EXN] |
| 4 | 209K2-42351 | | RELAY,1A | ﾘﾚｰ | 3 | [SIL] |
| - | 209K2-42351 | | RELAY,1A | ﾘﾚｰ | 3 | B |
| | | | | | | [EXE][EXN] |
| 5 | 214A2-42611 | | SCREW | ｽｸﾘｭ | 5 | [SIL] |
| - | 214A2-42611 | | SCREW | ｽｸﾘｭ | 5 | B |
| | | | | | | [EXE][EXN] |
| 6 | 52N57-E2201 | | BRACKET,RELAY | ﾌﾞﾗｹｯﾄ | 1 | [SIL] |
| - | 52N57-E2201 | | BRACKET,RELAY | ﾌﾞﾗｹｯﾄ | 1 | B |
| | | | | | | [EXE][EXN] |
| 7 | 01185-08025 | | BOLT | ﾎﾞﾙﾄ | 1 | [SIL] |
| - | 01185-08025 | | BOLT | ﾎﾞﾙﾄ | 1 | B |
| | | | | | | [EXE][EXN] |
| 8 | 247C2-43501 | | RELAY,1C | ﾘﾚｰ | 1 | [SIL] |
| - | 247C2-43501 | | RELAY,1C | ﾘﾚｰ | 1 | B |
| | | | | | | [EXE][EXN] |
| 9 | 247C2-43301 | | TIMER | ﾀｲﾏ | 1 | [SIL] |
| - | 247C2-43301 | | TIMER | ﾀｲﾏ | 1 | B |
| | | | | | | [EXE][EXN] |
| 10 | 21152-42091 | | DIODE,1A | ﾀﾞｲｵｰﾄﾞ | 2 | [SIL] |
| - | 21152-42091 | | DIODE,1A | ﾀﾞｲｵｰﾄﾞ | 2 | B |
| | | | | | | [EXE][EXN] |
| 11 | 247C2-43601 | | BUZZER | ﾌﾞｻﾞｰ | 1 | [SIL] |
| - | 247C2-43601 | | BUZZER | ﾌﾞｻﾞｰ | 1 | B |
| | | | | | | [EXE][EXN] |
| 12 | 230C2-42201 | | DIODE,3A | ﾀﾞｲｵｰﾄﾞ | 4 | [SIL] |
| - | 230C2-42201 | | DIODE,3A | ﾀﾞｲｵｰﾄﾞ | 4 | B |
| | | | | | | [EXE][EXN] |
| 13 | 27682-62131 | | GROMMET | ｸﾞﾛﾒｯﾄ | 1 | [SIL] |
| - | 27682-62131 | | GROMMET | ｸﾞﾛﾒｯﾄ | 1 | B |
| | | | | | | [EXE][EXN] |
| 14 | 246B2-43221 | | WIRE,LEAD,SIL | ﾜｲﾔ | 1 | [SIL] |
| - | 246B2-43221 | | WIRE,LEAD,SIL | ﾜｲﾔ | 1 | B |
| | | | | | | [EXE][EXN] |
| 15 | 01400-00008 | | NUT | ﾅｯﾄ | 1 | [SIL] |
| - | 01400-00008 | | NUT | ﾅｯﾄ | 1 | B |
| | | | | | | [EXE][EXN] |
| 16 | 02010-00008 | | WASHER | ﾜｯｼｬ | 1 | [SIL] |
| - | 02010-00008 | | WASHER | ﾜｯｼｬ | 1 | B |
| | | | | | | [EXE][EXN] |

# FIG.87 DRIVE AXLE

(F7023010) ﾄﾞﾗｲﾌﾞｱｸｽﾙ

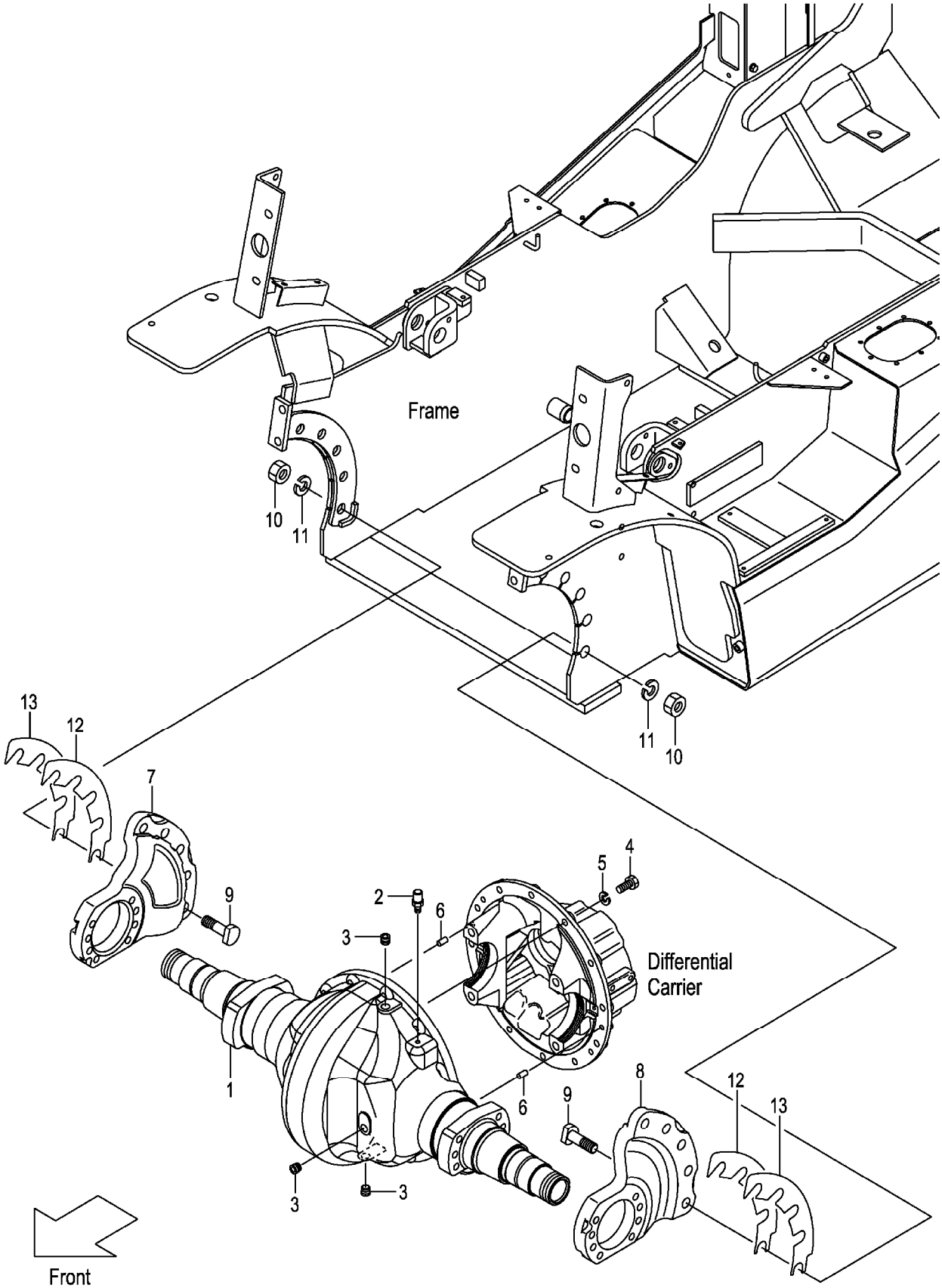

A:FG20C13 FG20T13 FG25C13 FG25T13 C:FD20C13 FD20T13 FD25C13 FD25T13 (F7023010)
B:FG20C3 FG20T3 FG25C3 FG25T3 FG20W3 FG25W3 D:FD20C3 FD20T3 FD25C3 FD25T3 FD20W3 FD25W3

| Item No | Part No. | Mark | Description | | Req'd | Remarks : Serial No. |
|---|---|---|---|---|---|---|
| 1 | 22N53-00302 | | HOUSING,AXLE | ﾊｳｼﾞﾝｸﾞ | 1 | |
| 2 | 15573-42151 | | BREATHER,AIR | ﾌﾞﾘｰｻﾞ | 1 | |
| 3 | 22193-03001 | | PLUG | ﾌﾟﾗｸﾞ | 3 | |
| 4 | 01106-12040 | | BOLT | ﾎﾞﾙﾄ | 12 | |
| 5 | 02011-00012 | | WASHER | ﾜｯｼｬ | 12 | |
| 6 | 02212-10020 | | PIN,PARALLEL | ﾋﾟﾝ | 2 | |
| 7 | 22N53-00602 | | SUPPORT,AXLE,RH | ｻﾎﾟｰﾄ | 1 | |
| 8 | 22N53-00612 | | SUPPORT,AXLE,LH | ｻﾎﾟｰﾄ | 1 | |
| 9 | 22N53-02151 | | BOLT | ﾎﾞﾙﾄ | 10 | |
| 10 | 01400-10020 | | NUT | ﾅｯﾄ | 10 | |
| 11 | 02010-00020 | | WASHER | ﾜｯｼｬ | 10 | |
| 12 | 22N53-02601 | | SHIM,SUPPORT,T-0.5 | ｼﾑ | 2 | A,C:110-<br>B,D:111- |
| 13 | 22N53-02611 | | SHIM,SUPPORT,T-1.0 | ｼﾑ | 2 | A,C:110-<br>B,D:111- |

# FIG.88 DRUM HUB

(F7023020) ﾄﾞﾗﾑﾊﾌﾞ

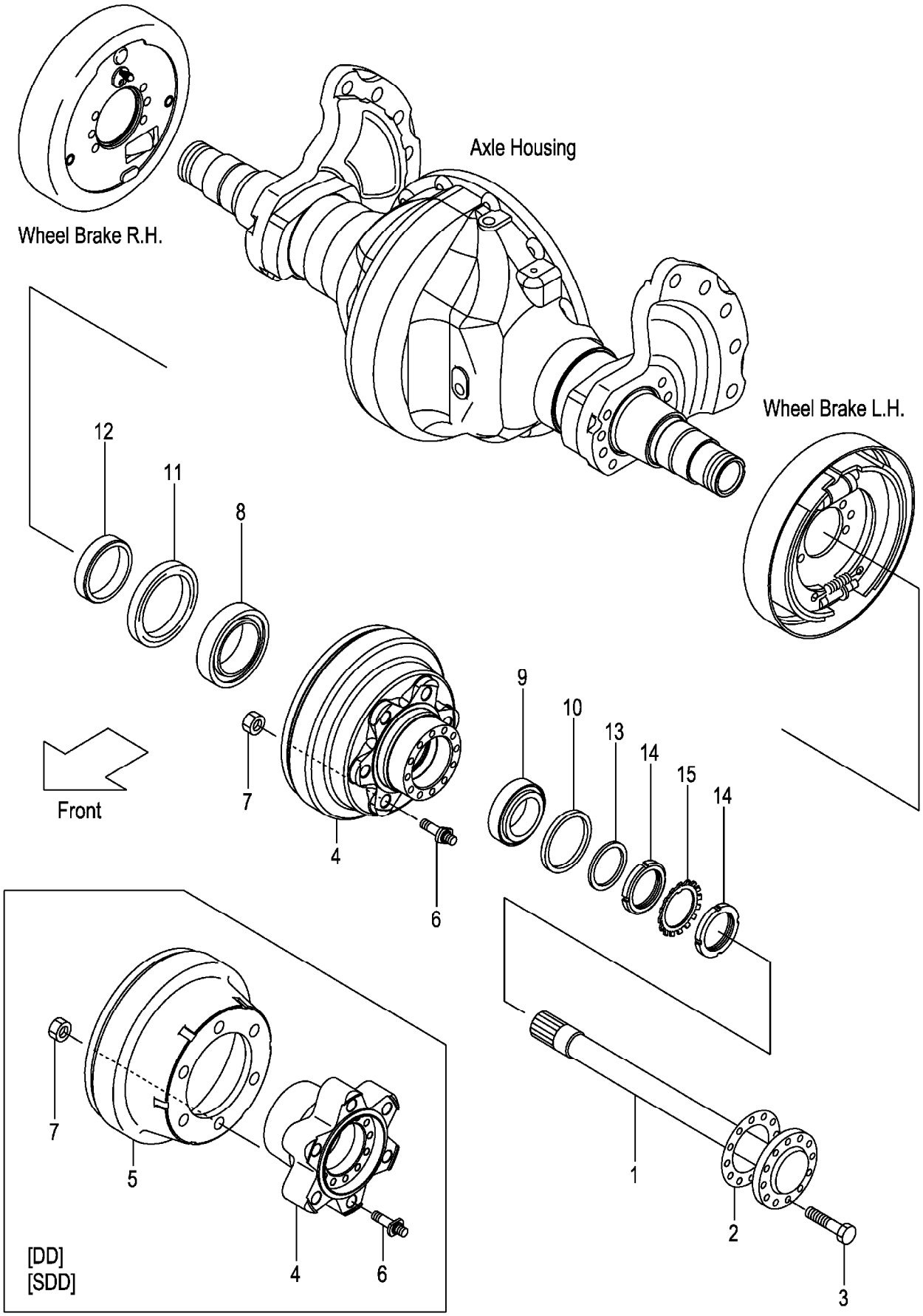

A:FG20C13 FG20T13 FG25C13 FG25T13 C:FD20C13 FD20T13 FD25C13 FD25T13 (F7023020)
B:FG20C3 FG20T3 FG25C3 FG25T3 FG20W3 FG25W3 D:FD20C3 FD20T3 FD25C3 FD25T3 FD20W3 FD25W3

| Item No | Part No. | Mark | Description | | Req'd | Remarks : Serial No. |
|---|---|---|---|---|---|---|
| 1 | 214A3-02011 | | SHAFT,DRIVE | ｼｬﾌﾄ | 2 | |
| 2 | 24453-02102 | | PACKING | ﾊﾟｯｷﾝｸﾞ | 2 | |
| 3 | 24453-02061 | | BOLT,REAMER | ﾎﾞﾙﾄ | 24 | |
| 4 | 22N53-02001 | | HUB & DRUM | ﾊﾌﾞ&ﾄﾞﾗﾑ | 2 | |
| - | 52N57-42101 | | HUB,FRONT | ﾊﾌﾞ | 2 | [DD][SDD] |
| 5 | 53657-42081 | | DRUM,BRAKE | ﾄﾞﾗﾑ | 2 | [DD][SDD] |
| 6 | 24353-72001 | | BOLT,HUB | ﾎﾞﾙﾄ | 12 | |
| - | 53657-42091 | | BOLT,HUB | ﾎﾞﾙﾄ | 12 | [DD][SDD] |
| 7 | 01400-10020 | | NUT | ﾅｯﾄ | 12 | |
| 8 | 03071-30214 | | BEARING,TAPER-ROLLER | ﾍﾞｱﾘﾝｸﾞ | 2 | |
| 9 | 23453-02071 | | BEARING,TAPER-ROLLER | ﾍﾞｱﾘﾝｸﾞ | 2 | INC.10 |
| 10 | 23453-02131 | | SEAL,OIL | ｼｰﾙ | 2 | |
| 11 | 03211-09501 | | SEAL,OIL | ｼｰﾙ | 2 | |
| 12 | 22N53-02071 | | RETAINER,OIL-SEAL | ﾘﾃｰﾅ | 2 | |
| 13 | 23453-02091 | | WASHER | ﾜｯｼｬ | 2 | |
| 14 | 03192-00012 | | NUT,BEARING | ﾅｯﾄ | 4 | |
| 15 | 03192-10012 | | WASHER,BEARING | ﾜｯｼｬ | 2 | |

# FIG.89 PROPELLER SHAFT

(F7023310) ﾌﾟﾛﾍﾟﾗｼｬﾌﾄ

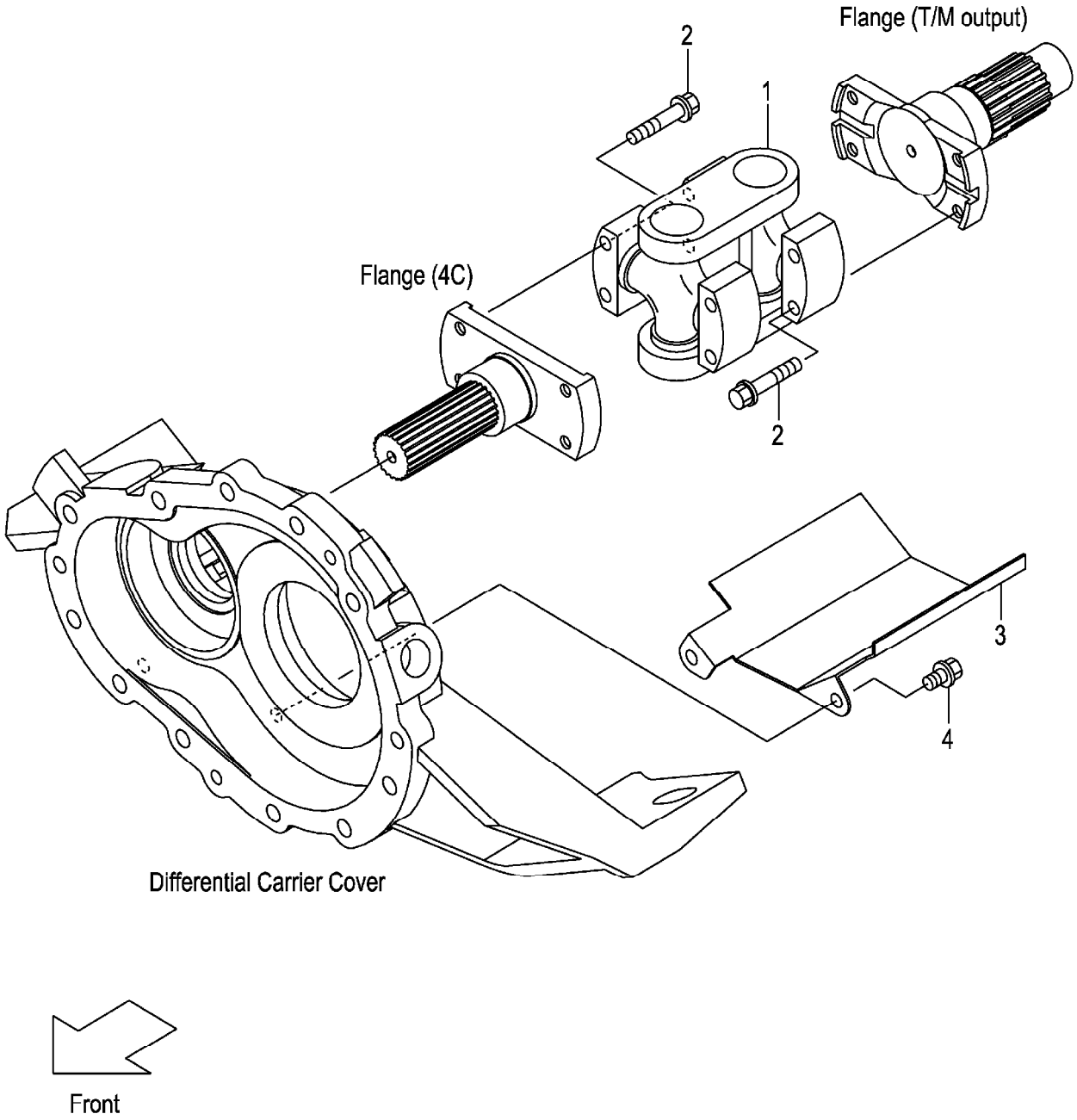

**FIG.89**

A:FG20C13 FG20T13 FG25C13 FG25T13 C:FD20C13 FD20T13 FD25C13 FD25T13 (F7023310)
B:FG20C3 FG20T3 FG25C3 FG25T3 FG20W3 FG25W3 D:FD20C3 FD20T3 FD25C3 FD25T3 FD20W3 FD25W3

| Item No | Part No. | Mark | Description | Req'd | Remarks : Serial No. |
|---|---|---|---|---|---|
| 1 | 12N53-32001 | | SHAFT,PROPELLER シャフト | 1 | |
| 2 | 12N53-82641 | | BOLT,FLANGE ボルト | 8 | |
| 3 | 12N53-32011 | | COVER,PROPEL-SHAFT カバー | 1 | |
| 4 | 12N53-82621 | | BOLT,FLANGE ボルト | 2 | |

# FIG.90 REDUCTION & DIFFERENTIAL

(F7023510) ﾘﾀﾞｸｼｮﾝ&ﾃﾞｨﾌｧﾚﾝｼｬﾙ

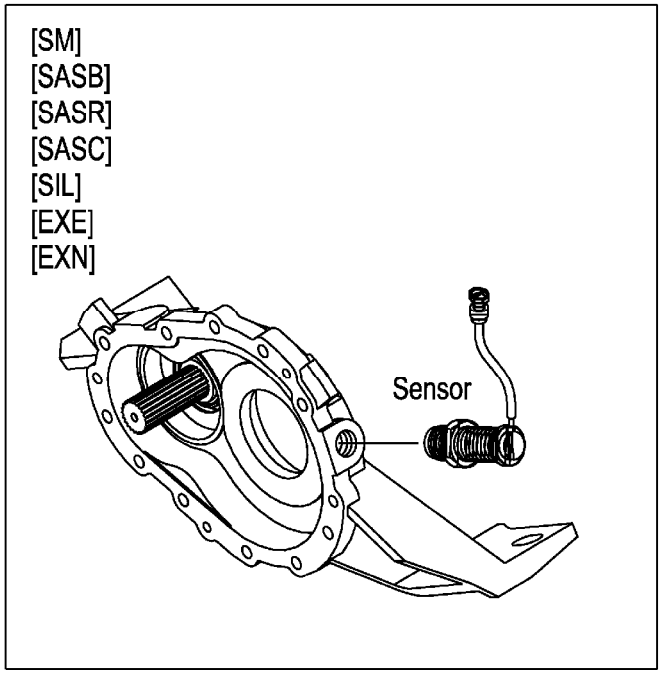


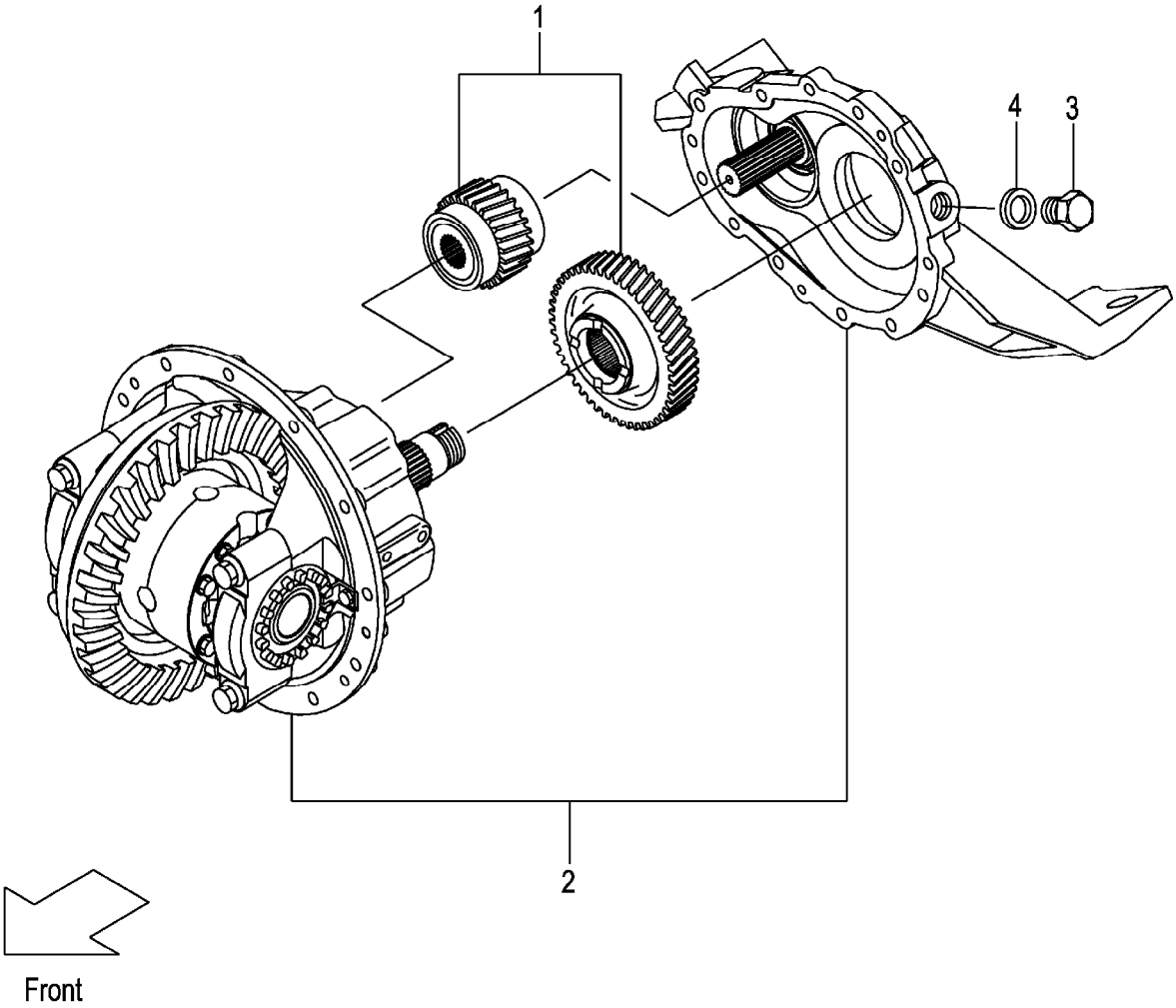

A:FG20C13 FG20T13 FG25C13 FG25T13 C:FD20C13 FD20T13 FD25C13 FD25T13 (F7023510)
B:FG20C3 FG20T3 FG25C3 FG25T3 FG20W3 FG25W3 D:FD20C3 FD20T3 FD25C3 FD25T3 FD20W3 FD25W3

| Item No | Part No. | Mark | Description | | Req'd | Remarks : Serial No. |
|---|---|---|---|---|---|---|
| A1 | 12A53-50201 | | DIFFERENTIAL-ASSY | ﾃﾞﾌｧﾚﾝｼｬﾙｱｯｾﾝ | 1 | A,C<br>INC.1,2 |
| - | 12N53-50201 | | DIFFERENTIAL-ASSY | ﾃﾞﾌｧﾚﾝｼｬﾙｱｯｾﾝ | 1 | B,D<br>INC.1,2 |
| - | 12A53-50231 | | DIFFERENTIAL-ASSY | ﾃﾞﾌｧﾚﾝｼｬﾙｱｯｾﾝ | 1 | A,C<br>[DNS] INC.1,2 |
| - | 12N53-50231 | | DIFFERENTIAL-ASSY | ﾃﾞﾌｧﾚﾝｼｬﾙｱｯｾﾝ | 1 | B,D<br>[DNS] INC.1,2 |
| 1 | NO PART NO. | | REDUCTION | ﾘﾀﾞｸｼｮﾝ | 1 | A,C<br>SEE FIG.91 |
| - | NO PART NO. | | REDUCTION | ﾘﾀﾞｸｼｮﾝ | 1 | B,D<br>SEE FIG.91 |
| 2 | NO PART NO. | | DIFFERENTIAL | ﾃﾞﾌｧﾚﾝｼｬﾙ | 1 | SEE FIG.92 |
| - | NO PART NO. | | DIFFERENTIAL | ﾃﾞﾌｧﾚﾝｼｬﾙ | 1 | [DNS]SEE FIG.92 |
| 3 | 124T3-42651 | | BOLT | ﾎﾞﾙﾄ | 1 | (WITHOUT SM,SASB,SASR,SASC, SIL,EXE,EXN) |
| 4 | 124T3-42661 | | PACKING | ﾊﾟｯｷﾝｸﾞ | 1 | (WITHOUT SM,SASB,SASR,SASC, SIL,EXE,EXN) |

# FIG.91 REDUCTION

(F7023520) ﾘﾀﾞｸｼｮﾝ

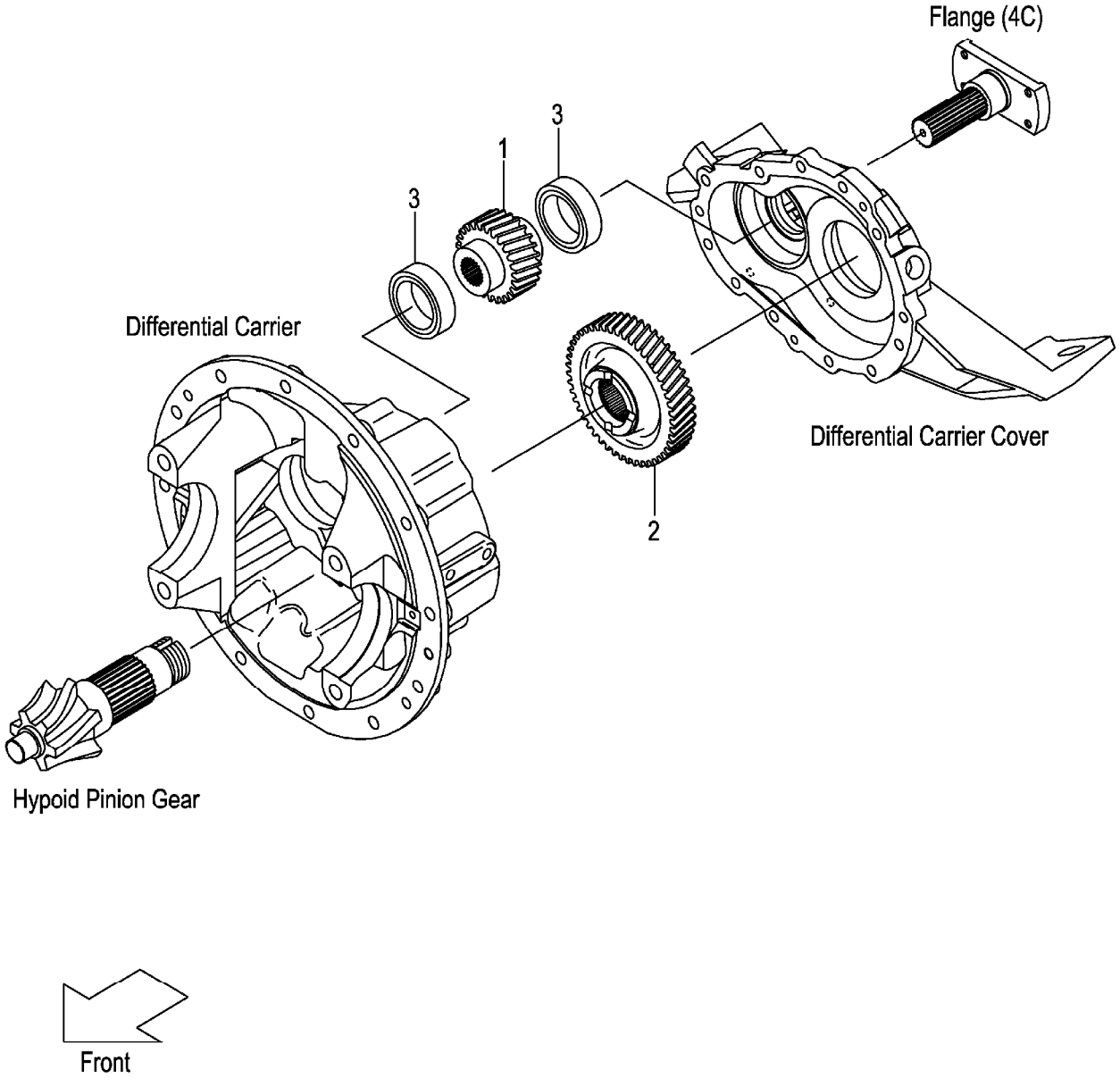

A:FG20C13 FG20T13 FG25C13 FG25T13 C:FD20C13 FD20T13 FD25C13 FD25T13 (F7023520)
B:FG20C3 FG20T3 FG25C3 FG25T3 FG20W3 FG25W3 D:FD20C3 FD20T3 FD25C3 FD25T3 FD20W3 FD25W3

| Item No | Part No. | Mark | Description | Req'd | Remarks : Serial No. |
|---|---|---|---|---|---|
| 1 | 12A53-22001 | | GEAR,REDUCTION ｷﾞﾔｰ | 1 | A,C |
| - | 12N53-22001 | | GEAR,REDUCTION ｷﾞﾔｰ | 1 | B,D |
| 2 | 12A53-22011 | | GEAR,REDUCTION ｷﾞﾔｰ | 1 | A,C |
| - | 12N53-22011 | | GEAR,REDUCTION ｷﾞﾔｰ | 1 | B,D |
| 3 | 03000-06210 | | BEARING,BALL ﾍﾞｱﾘﾝｸﾞ | 2 | |

# FIG.92 DIFFERENTIAL

(F7023530) ﾃﾞｨﾌｧﾚﾝｼｬﾙ

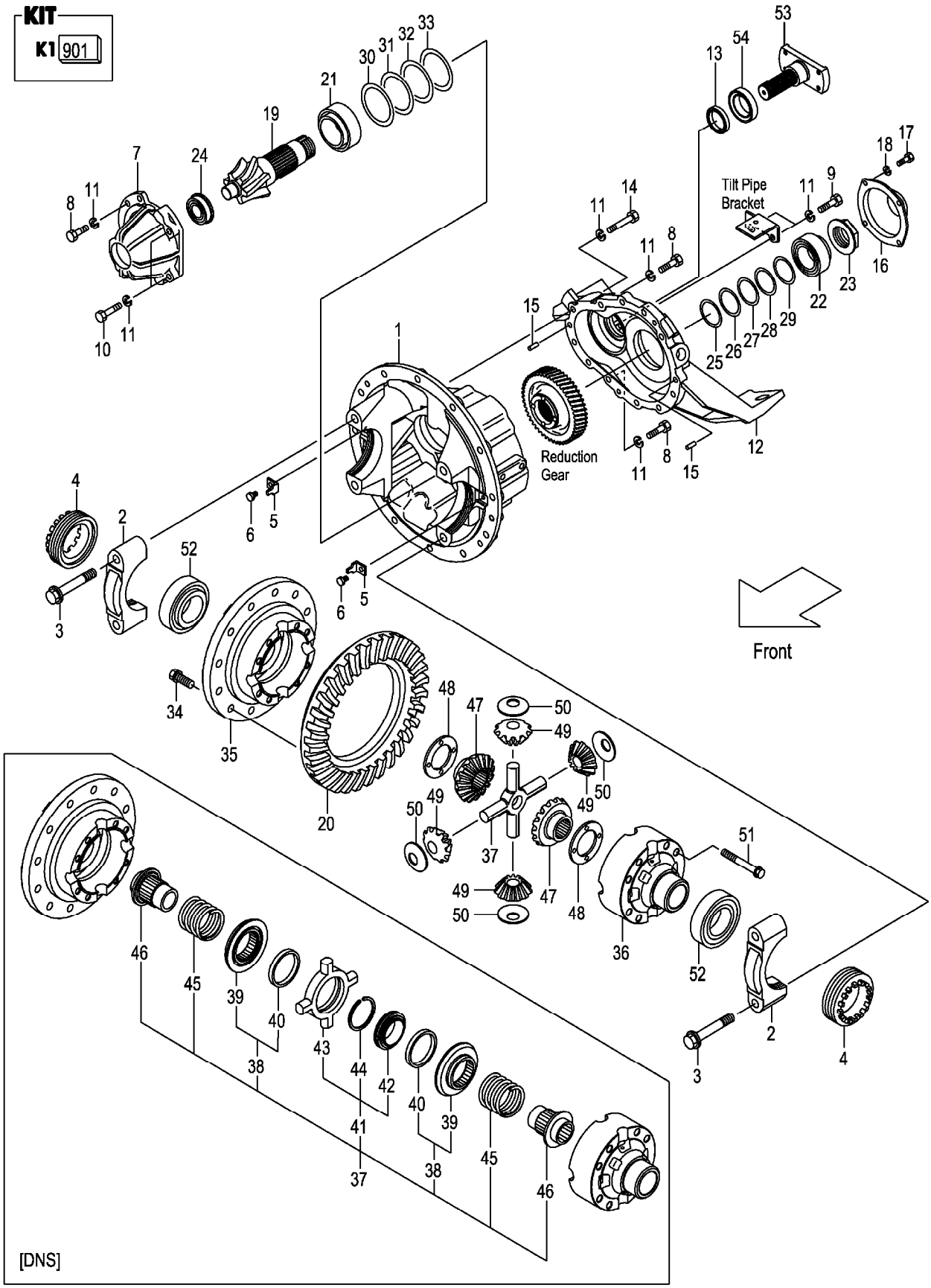

A:FG20C13 FG20T13 FG25C13 FG25T13 C:FD20C13 FD20T13 FD25C13 FD25T13 (F7023530)
B:FG20C3 FG20T3 FG25C3 FG25T3 FG20W3 FG25W3 D:FD20C3 FD20T3 FD25C3 FD25T3 FD20W3 FD25W3

| Item No | Part No. | Mark | Description | | Req'd | Remarks : Serial No. |
|---|---|---|---|---|---|---|
| 901 | 12N53-59821 | K1 | KIT,OVERHAUL,DIFF | ｵｰﾊﾞﾎｰﾙｷｯﾄ | 1 | INC.5,13,23,25-33,48,50 |
| A1 | 12N53-50301 | | CARRIER & CAP-ASSY | ｷｬﾘﾔ&ｷｬｯﾌﾟｱｯｾﾝ | 1 | INC.1-3 |
| 1 | NO PART NO. | # | CARRIER,DIFFERENTIAL | ｷｬﾘﾔ | 1 | |
| 2 | NO PART NO. | # | CAP,BEARING | ｷｬｯﾌﾟ | 2 | |
| 3 | 12N53-52131 | | BOLT,REAMER | ﾎﾞﾙﾄ | 4 | |
| 4 | 12N53-52081 | | NUT,ADJUST | ﾅｯﾄ | 2 | |
| 5 | 12N53-52141 | * | PLATE,LOCK | ﾌﾟﾚｰﾄ | 2 | |
| 6 | 12N53-82621 | | BOLT,FLANGE | ﾎﾞﾙﾄ | 2 | |
| 7 | 12N53-52061 | | SUPPORT,BEARING | ｻﾎﾟｰﾄ | 1 | |
| 8 | 01106-10030 | | BOLT | ﾎﾞﾙﾄ | 6 | |
| 9 | 01106-10035 | | BOLT | ﾎﾞﾙﾄ | 2 | |
| 10 | 01106-10045 | | BOLT | ﾎﾞﾙﾄ | 2 | |
| 11 | 02011-00010 | | WASHER | ﾜｯｼｬ | 17 | |
| 12 | 12N53-52031 | | COVER,DIFF-CARRIER | ｶﾊﾞｰ | 1 | |
| 13 | 12N53-52251 | * | SEAL,OIL | ｼｰﾙ | 1 | |
| 14 | 01106-10060 | | BOLT | ﾎﾞﾙﾄ | 7 | |
| 15 | 02212-10020 | | PIN,PARALLEL | ﾋﾟﾝ | 2 | |
| 16 | 12N53-52111 | | COVER,PINION | ｶﾊﾞｰ | 1 | |
| 17 | 01103-08016 | | BOLT | ﾎﾞﾙﾄ | 4 | |
| 18 | 02011-00008 | | WASHER | ﾜｯｼｬ | 4 | |
| A2 | 12N53-59801 | | GEAR-ASSY,HYPOID | ﾊｲﾎﾟｲﾄﾞｷﾞﾔｰｱｯｾﾝ | 1 | INC.19,20 |
| 19 | NO PART NO. | # | GEAR,PINION,LH | ｷﾞﾔｰ | 1 | |
| 20 | NO PART NO. | # | GEAR,RING,RH | ｷﾞﾔｰ | 1 | |
| 21 | 14603-52131 | | BEARING,TAPER-ROLLER | ﾍﾞｱﾘﾝｸﾞ | 1 | |
| 22 | 12N53-52231 | | BEARING,TAPER-ROLLER | ﾍﾞｱﾘﾝｸﾞ | 1 | |
| 23 | 12N53-52101 | * | NUT,PINION | ﾅｯﾄ | 1 | |
| 24 | 12N53-52341 | | BEARING,ROLLER | ﾍﾞｱﾘﾝｸﾞ | 1 | |
| 25 | 12N53-52171 | * | SHIM,T-0.1 | ｼﾑ | 1 | |
| 26 | 12N53-52271 | * | SHIM,T-0.15 | ｼﾑ | 1 | |
| 27 | 12N53-52181 | * | SHIM,T-0.2 | ｼﾑ | 2 | |
| 28 | 12N53-52191 | * | SHIM,T-0.5 | ｼﾑ | 1 | |
| 29 | 12N53-52351 | * | SHIM,T-0.125 | ｼﾑ | 1 | |
| 30 | 12N53-52201 | * | SHIM,T-0.1 | ｼﾑ | 1 | |
| 31 | 12N53-52291 | * | SHIM,T-0.15 | ｼﾑ | 1 | |
| 32 | 12N53-52211 | * | SHIM,T-0.2 | ｼﾑ | 2 | |
| 33 | 12N53-52221 | * | SHIM,T-0.5 | ｼﾑ | 1 | |
| 34 | 12N53-52151 | | BOLT,FLANGE | ﾎﾞﾙﾄ | 12 | |
| A3 | 12N53-59811 | | CASE-ASSY,CROSS | ｸﾛｽｹｰｽｱｯｾﾝ | 1 | INC.35,36 |
| 35 | NO PART NO. | # | CASE,CROSS,RH | ｹｰｽ | 1 | |
| 36 | NO PART NO. | # | CASE,CROSS,LH | ｹｰｽ | 1 | |
| 37 | 124G3-52011 | | SPIDER | ｽﾊﾟｲﾀﾞ | 1 | |
| - | 12N53-52381 | | NOSPIN | ﾉｰｽﾋﾟﾝ | 1 | [DNS] INC.38-46 |
| 38 | 12N53-52431 | | CLUTCH-ASSY,DRIVEN | ﾄﾞﾘﾌﾞﾝｸﾗｯﾁｱｯｾﾝ | 2 | [DNS] INC.39,40 |
| 39 | 12N53-52441 | | CLUTCH,DRIVEN | ｸﾗｯﾁ | 2 | [DNS] |
| 40 | 12N53-52451 | | RING,HOLDOUT | ﾘﾝｸﾞ | 2 | [DNS] |
| 41 | 12N53-52461 | | SPIDER | ｽﾊﾟｲﾀﾞ | 1 | [DNS] INC.42-44 |
| 42 | 12N53-52471 | | CAM,CENTER | ｶﾑ | 1 | [DNS] |
| 43 | 12N53-52481 | | SPIDER | ｽﾊﾟｲﾀﾞ | 1 | [DNS] |
| 44 | 12N53-52491 | | RING,SNAP | ｽﾅｯﾌﾟﾘﾝｸﾞ | 1 | [DNS] |
| 45 | 12N53-52501 | | SPRING | ｽﾌﾟﾘﾝｸﾞ | 2 | [DNS] |

# FIG.92 DIFFERENTIAL

(F7023530) ﾃﾞｨﾌｧﾚﾝｼｬﾙ

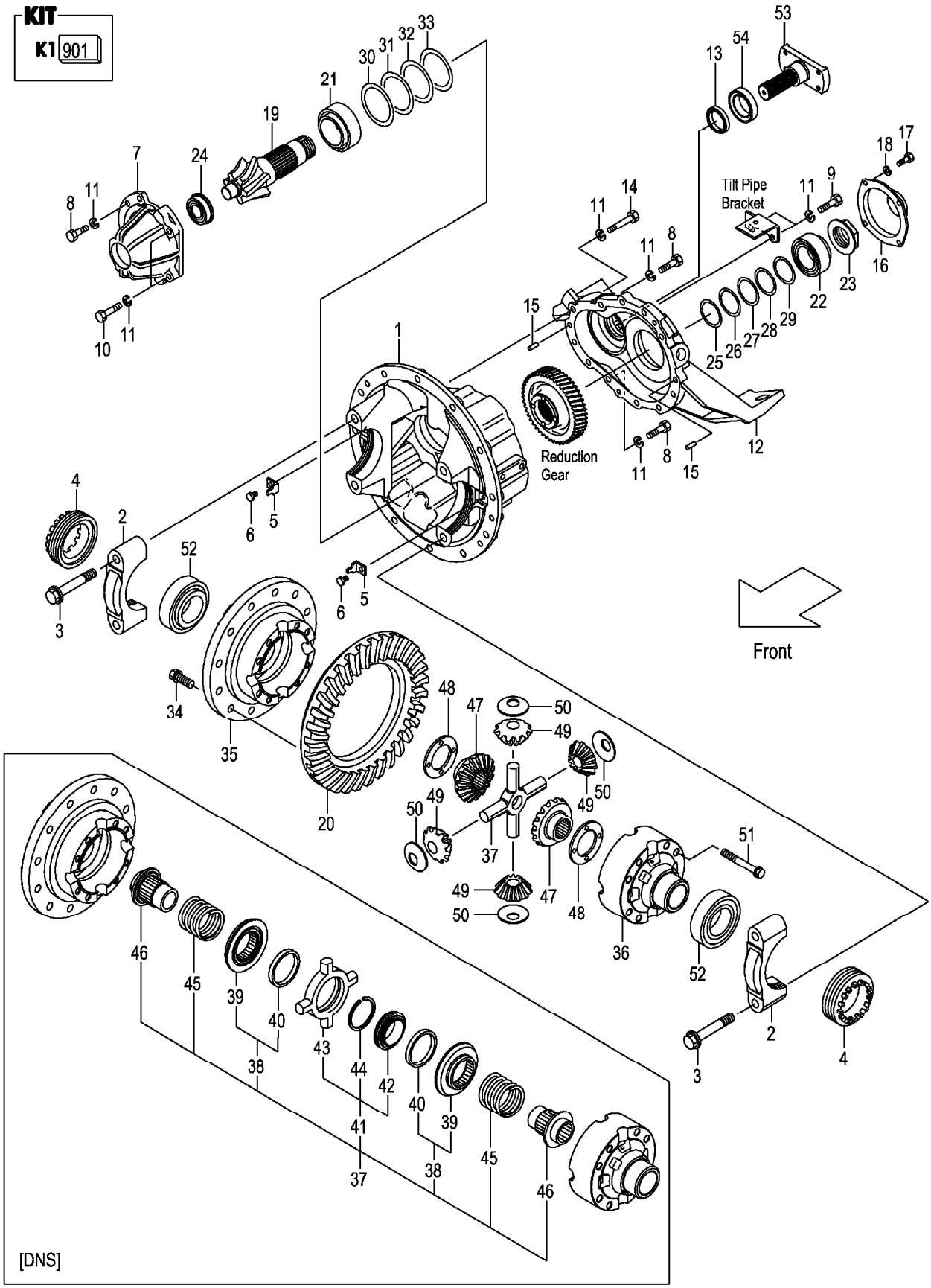

A:FG20C13 FG20T13 FG25C13 FG25T13 C:FD20C13 FD20T13 FD25C13 FD25T13 (F7023530)
B:FG20C3 FG20T3 FG25C3 FG25T3 FG20W3 FG25W3 D:FD20C3 FD20T3 FD25C3 FD25T3 FD20W3 FD25W3

| Item No | Part No. | Mark | Description | | Req'd | Remarks : Serial No. |
|---|---|---|---|---|---|---|
| 46 | 12N53-52511 | | GEAR,SIDE | ｷﾞﾔｰ | 2 | [DNS] |
| 47 | 134A3-52041 | | GEAR,SIDE | ｷﾞﾔｰ | 2 | (WITHOUT DNS) |
| 48 | 16113-52141 | * | WASHER,THRUST | ﾜｯｼｬ | 2 | (WITHOUT DNS) |
| 49 | 134A3-52051 | | GEAR,PINION | ｷﾞﾔｰ | 4 | (WITHOUT DNS) |
| 50 | 16113-52121 | * | WASHER,THRUST | ﾜｯｼｬ | 4 | (WITHOUT DNS) |
| 51 | 12N53-52161 | | BOLT,FLANGE | ﾎﾞﾙﾄ | 8 | |
| 52 | 12N53-52241 | | BEARING,TAPER-ROLLER | ﾍﾞｱﾘﾝｸﾞ | 2 | |
| 53 | 12N53-52091 | | FLANGE,4C | ﾌﾗﾝｼﾞ | 1 | |
| 54 | 12N53-52121 | | COVER,DUST | ｶﾊﾞｰ | 1 | |

# M E M O

# M E M O

# FIG.93 WHEEL BRAKE

(F7023710) ホイールブレーキ

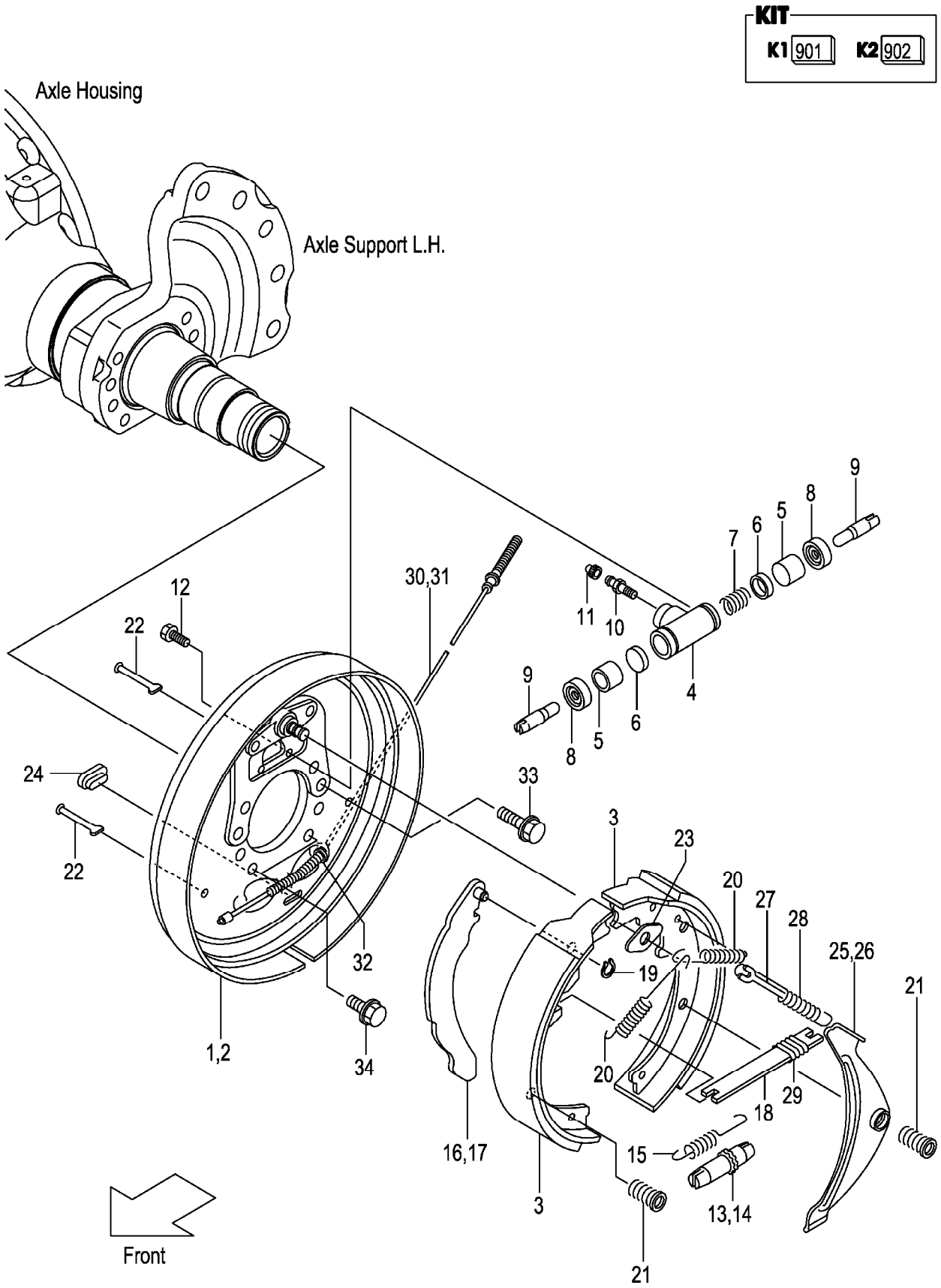

A:FG20C13 FG20T13 FG25C13 FG25T13 C:FD20C13 FD20T13 FD25C13 FD25T13 (F7023710)
B:FG20C3 FG20T3 FG25C3 FG25T3 FG20W3 FG25W3 D:FD20C3 FD20T3 FD25C3 FD25T3 FD20W3 FD25W3

| Item No | Part No. | Mark | Description | | Req'd | Remarks : Serial No. |
|---|---|---|---|---|---|---|
| A1 | 22N53-70101 | | BRAKE-ASSY,RH | ﾌﾞﾚｰｷｱｯｾﾝ | 1 | INC.1,3-13,15,16,18-25, 27-30,32 |
| A2 | 22N53-70201 | | BRAKE-ASSY,LH | ﾌﾞﾚｰｷｱｯｾﾝ | 1 | INC.2-12,14,15,17-24,26-29, 31,32 |
| 901 | 522A2-61561 | K1 | KIT,BRAKE-SHOE | ｼｭｰｷｯﾄ | 2 | INC.3 |
| 1 | 234A3-72021 | | PLATE,BACK,RH | ﾌﾟﾚｰﾄ | 1 | |
| 2 | 234A3-72031 | | PLATE,BACK,LH | ﾌﾟﾚｰﾄ | 1 | |
| 3 | NO PART NO. | #* | SHOE,BRAKE | ｼｭｰ | 4 | |
| A3 | 234A3-72001 | | CYL-ASSY,WHEEL | ﾎｲｰﾙｼﾘﾝﾀﾞｱｯｾﾝ | 2 | INC.4-11 |
| 902 | 22673-79801 | K2 | KIT,OVERHAUL | ｵｰﾊﾞﾎｰﾙｷｯﾄ | 2 | INC.5-8 |
| 4 | NO PART NO. | # | BODY,WHEEL-CYL | ﾎﾞﾃﾞｨ | 2 | |
| 5 | NO PART NO. | #* | PISTON | ﾋﾟｽﾄﾝ | 4 | |
| 6 | NO PART NO. | #* | CUP,PISTON | ｶｯﾌﾟ | 4 | |
| 7 | NO PART NO. | #* | SPRING | ｽﾌﾟﾘﾝｸﾞ | 2 | |
| 8 | NO PART NO. | #* | COVER,DUST | ｶﾊﾞｰ | 4 | |
| 9 | 22673-72111 | | ROD,PISTON | ﾛｯﾄﾞ | 4 | |
| 10 | 22673-72131 | | SCREW,BLEEDER | ｽｸﾘｭ | 2 | |
| 11 | 22673-72141 | | CAP,BLEEDER-SCREW | ｷｬｯﾌﾟ | 2 | |
| 12 | 22673-72161 | | BOLT | ﾎﾞﾙﾄ | 4 | |
| 13 | 23653-72031 | | ADJUSTER,RH | ｱｼﾞｬｽﾀ | 1 | |
| 14 | 23653-72041 | | ADJUSTER,LH | ｱｼﾞｬｽﾀ | 1 | |
| 15 | 23653-72051 | | SPRING,ADJUSTER | ｽﾌﾟﾘﾝｸﾞ | 2 | |
| 16 | 23653-72062 | | LEVER,BRAKE,RH | ﾚﾊﾞｰ | 1 | |
| 17 | 23653-72072 | | LEVER,BRAKE,LH | ﾚﾊﾞｰ | 1 | |
| 18 | 23653-72081 | | STRUT | ｽﾄﾗｯﾄ | 2 | |
| 19 | 22673-72252 | | RETAINER | ﾘﾃｰﾅ | 2 | |
| 20 | 22673-72261 | | SPRING,SHOE-RETURN | ｽﾌﾟﾘﾝｸﾞ | 4 | |
| 21 | 234A3-72101 | | SPRING,SHOE-HOLD | ｽﾌﾟﾘﾝｸﾞ | 8 | |
| 22 | 23653-72101 | | PIN,SHOE-HOLD | ﾋﾟﾝ | 8 | |
| 23 | 23653-72131 | | PLATE,SHOE-GUIDE | ﾌﾟﾚｰﾄ | 2 | |
| 24 | 22673-72321 | | PLUG,RUBBER | ﾌﾟﾗｸﾞ | 2 | |
| 25 | 23653-72142 | | LEVER,PAWL,RH | ﾚﾊﾞｰ | 1 | |
| 26 | 23653-72152 | | LEVER,PAWL,LH | ﾚﾊﾞｰ | 1 | |
| 27 | 23653-72161 | | STOPPER,PAWL-LEVER | ｽﾄｯﾊﾟ | 2 | |
| 28 | 23653-72171 | | SPRING,ACTUATOR | ｽﾌﾟﾘﾝｸﾞ | 2 | |
| 29 | 22673-72391 | | SPRING,ANTIRATTLE | ｽﾌﾟﾘﾝｸﾞ | 2 | |
| 30 | 79244-23319 | | CABLE,CONTROL,RH | ｹｰﾌﾞﾙ | 1 | |
| 31 | 271G3-72001 | | CABLE,CONTROL,LH | ｹｰﾌﾞﾙ | 1 | |
| 32 | 23653-72201 | | RETAINER | ﾘﾃｰﾅ | 2 | |
| 33 | 22N53-02212 | | BOLT | ﾎﾞﾙﾄ | 12 | |
| 34 | 22N53-02201 | | BOLT | ﾎﾞﾙﾄ | 4 | |

# FIG.94 STEERING WHEEL UNIT

(F7024110) ｽﾃｱﾘﾝｸﾞﾎｲｰﾙﾕﾆｯﾄ

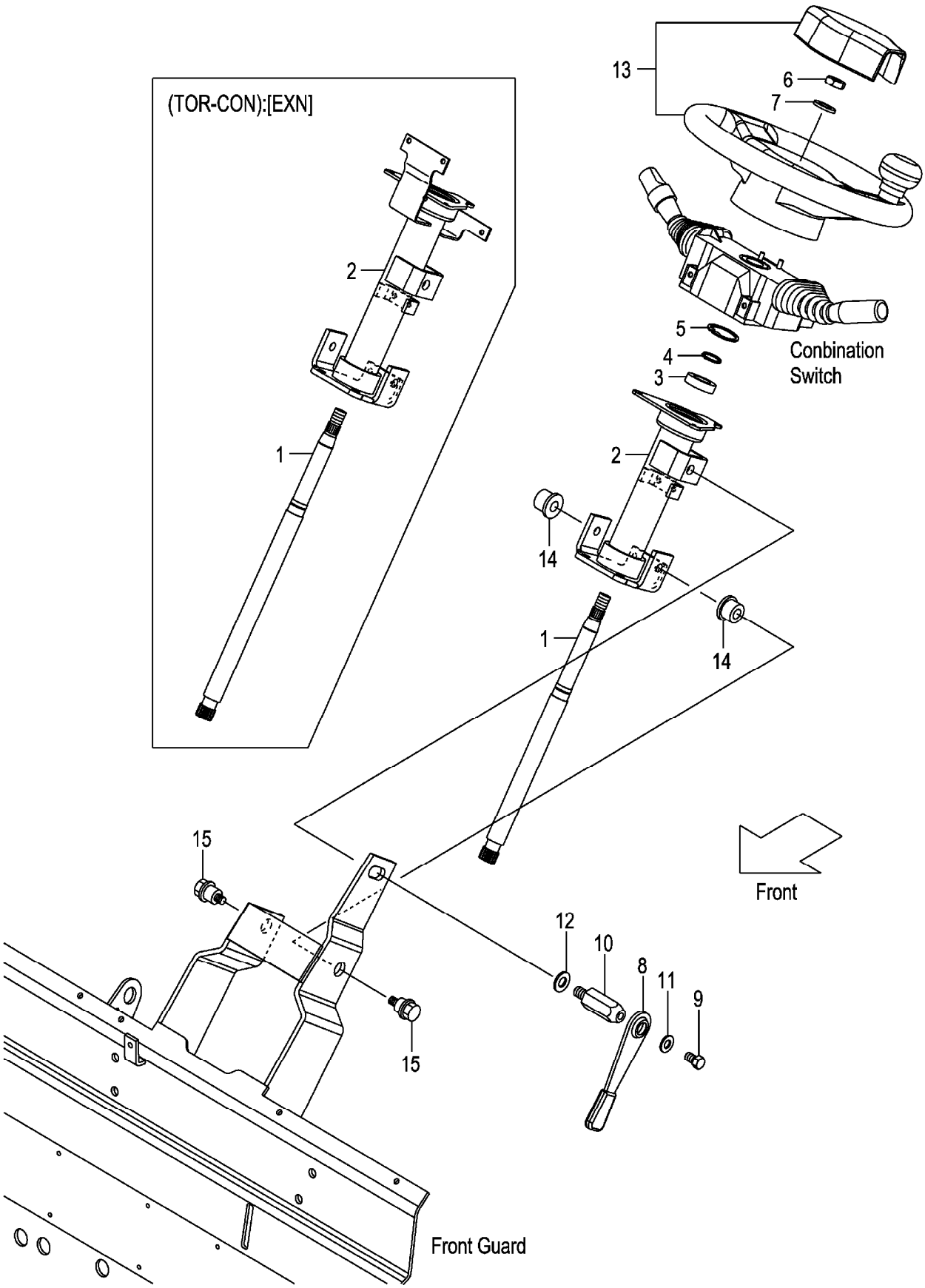

A:FG20C13 FG25C13 D:FG20T3 FG25T3 G:FD20T13 FD25T13 K:FD20W3 FD25W3
B:FG20T13 FG25T13 E:FG20W3 FG25W3 H:FD20C3 FD25C3
C:FG20C3 FG25C3 F:FD20C13 FD25C13 J:FD20T3 FD25T3

**FIG.94**
(F7024110)

| Item No | Part No. | Mark | Description | | Req'd | Remarks : Serial No. |
|---|---|---|---|---|---|---|
| 1 | 22N54-12011 | | SHAFT,STEERING | ｼｬﾌﾄ | 1 | |
| - | 52N52-62201 | | SHAFT,STEERING | ｼｬﾌﾄ | 1 | D,J<br>[EXN] |
| 2 | 22N54-12021 | | TUBE,STEERING-COLUMN | ﾁｭｰﾌﾞ | 1 | A,B:1-128<br>C,D,E:1-239<br>F,G:1-125<br>H,J,K:1-505 |
| - | 22N54-12022 | | TUBE,STEERING-COLUMN | ﾁｭｰﾌﾞ | 1 | A,B:129-<br>C,D,E:240-<br>F,G:126-<br>H,J,K:506- |
| - | 52N52-62101 | | TUBE,STEERING-COLUMN | ﾁｭｰﾌﾞ | 1 | D,J<br>[EXN] |
| 3 | 03020-06904 | | BEARING,BALL | ﾍﾞｱﾘﾝｸﾞ | 1 | |
| 4 | 02100-00020 | | RING,SNAP | ｽﾅｯﾌﾟﾘﾝｸﾞ | 1 | |
| 5 | 02110-00037 | | RING,SNAP | ｽﾅｯﾌﾟﾘﾝｸﾞ | 1 | |
| 6 | 01402-10014 | | NUT | ﾅｯﾄ | 1 | |
| 7 | 02000-00014 | | WASHER | ﾜｯｼｬ | 1 | |
| A1 | 239A4-12402 | | LEVER-ASSY,TILT-LOCK | ﾃｨﾙﾄﾛｯｸﾚﾊﾞｰｱｯｾﾝ | 1 | INC.8-11 |
| 8 | 239A4-12411 | | LEVER | ﾚﾊﾞｰ | 1 | |
| 9 | 239A4-12441 | | BOLT | ﾎﾞﾙﾄ | 1 | |
| 10 | 239A4-12431 | | BOLT,LOCK | ﾎﾞﾙﾄ | 1 | |
| 11 | 214A4-12161 | | WASHER | ﾜｯｼｬ | 1 | |
| 12 | 02000-00012 | | WASHER | ﾜｯｼｬ | 1 | |
| 13 | 22N54-10201 | | WHEEL,STEERING | ﾎｲｰﾙ | 1 | |
| 14 | 216G4-12101 | | BUSHING | ﾌﾞｯｼﾝｸﾞ | 2 | |
| 15 | 216G4-12111 | | BOLT | ﾎﾞﾙﾄ | 2 | |

**FIG.95 ORBITROL**
(F7024120) オービットロール

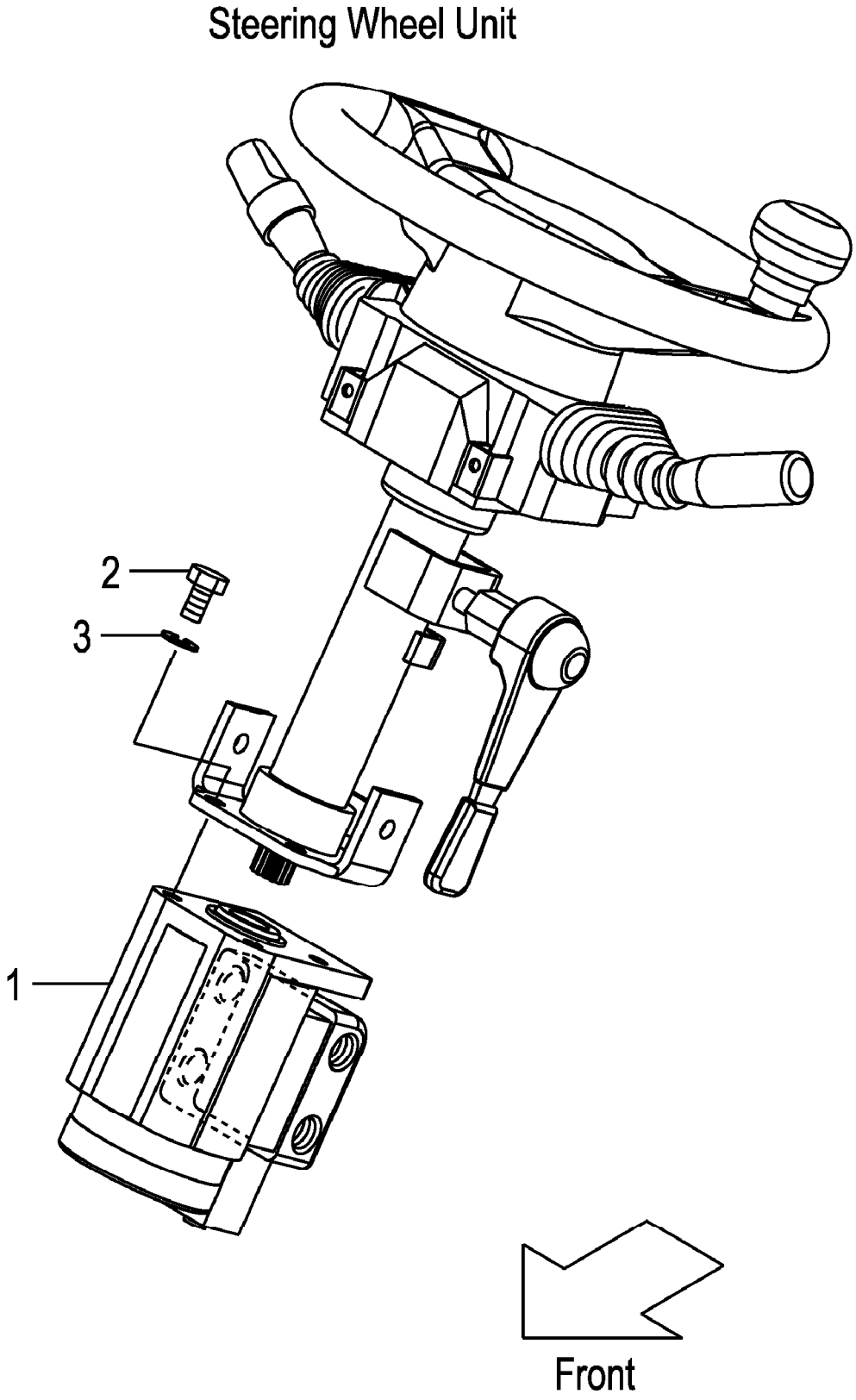

A:FG20C13 FG20T13 FG25C13 FG25T13 D:FD20C13 FD20T13 FD25C13 FD25T13
B:FG20C3 FG20T3 FG25C3 FG25T3 E:FD20C3 FD20T3 FD25C3 FD25T3
C:FG20W3 FG25W3 F:FD20W3 FD25W3

**FIG.95**
(F7024120)

| Item No | Part No. | Mark | Description | | Req'd | Remarks : Serial No. |
|---|---|---|---|---|---|---|
| 1 | 22N54-10301 | | UNIT,ORBITROL | ﾕﾆｯﾄ | 1 | |
| - | 22N54-10311 | | UNIT,ORBITROL | ﾕﾆｯﾄ | 1 | [VSL] |
| 2 | 01110-10025 | | BOLT | ﾎﾞﾙﾄ | 4 | A,D:1-109 |
| | | | | | | B,C,E,F:1-110 |
| - | 01113-10035 | | BOLT | ﾎﾞﾙﾄ | 4 | A,D:110- |
| | | | | | | B,C,E,F:111- |
| 3 | 02011-00010 | | WASHER | ﾜｯｼｬ | 4 | |

# FIG.96 ORBITROL [EXE][EXK][EXN]

(F7024130) オービットロール

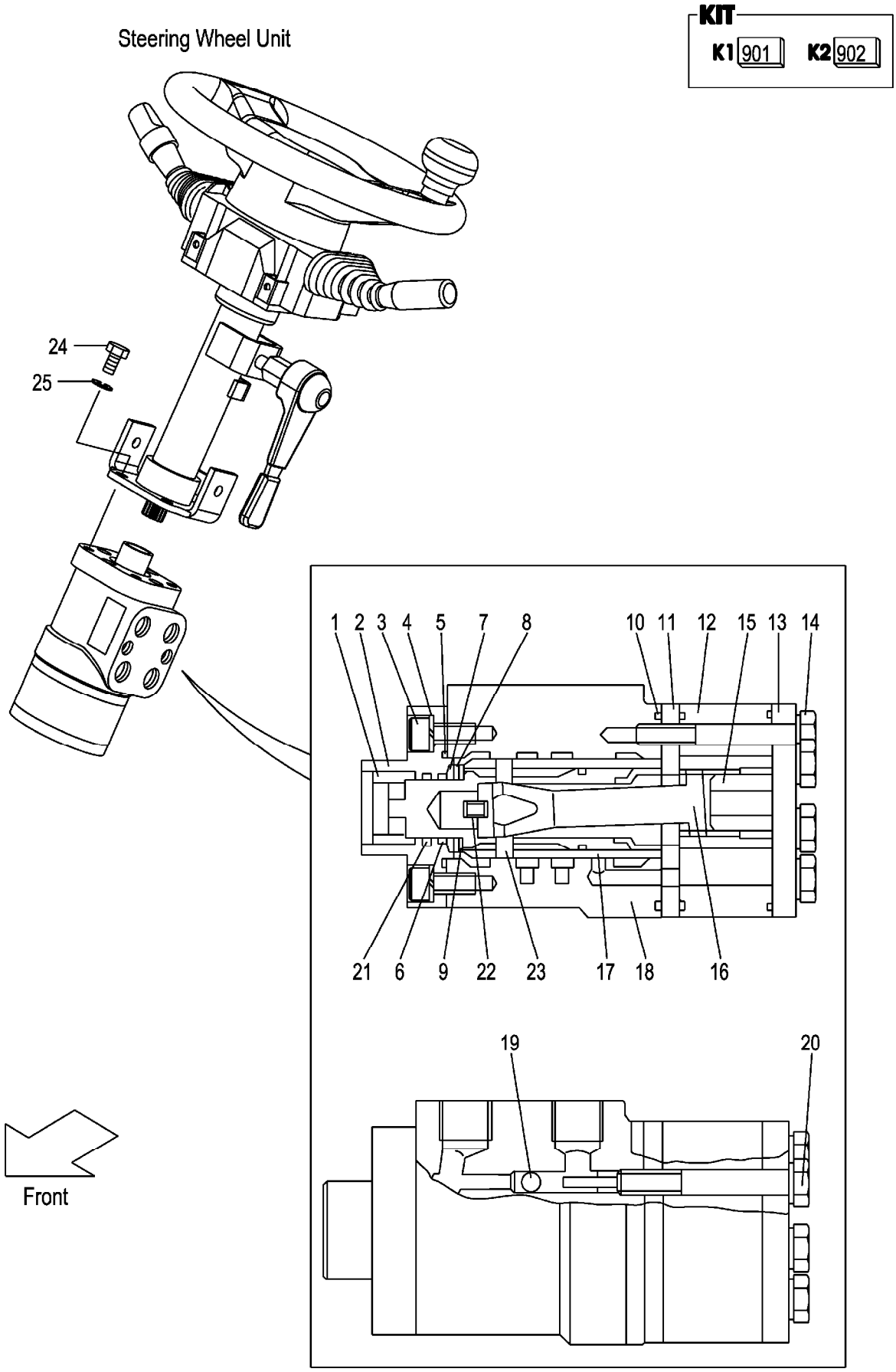

A:FG20C3 FG20T3 FG25C3 FG25T3
B:FD20C3 FD20T3 FD25C3 FD25T3

| Item No | Part No. | Mark | Description | | Req'd | Remarks : Serial No. |
|---|---|---|---|---|---|---|
| A1 | HC32G4-10101 | | UNIT-ASSY,ORBITROL | | 1 | [EXE][EXK][EXN] INC.1-23 |
| | | | | ｵｰﾋﾞｯﾄﾛｰﾙﾕﾆｯﾄｱｯｾﾝ | | |
| 901 | HC516G2-42411 | K1 | KIT,SEAL | ｼｰﾙｷｯﾄ | 1 | [EXE][EXK][EXN] INC.5,6,10,21 |
| 902 | HC26094-17021 | K2 | KIT,BEARING,NEEDLE | ﾆｰﾄﾞﾙﾍﾞｱﾘﾝｸﾞｷｯﾄ | 1 | [EXE][EXK][EXN] INC.7-9 |
| 1 | NO PART NO. | # | BUSHING | ﾌﾞｯｼﾝｸﾞ | 1 | [EXE][EXK][EXN] |
| 2 | NO PART NO. | # | CAP,FRONT | ｷｬｯﾌﾟ | 1 | [EXE][EXK][EXN] |
| 3 | NO PART NO. | # | BOLT | ﾎﾞﾙﾄ | 4 | [EXE][EXK][EXN] |
| 4 | NO PART NO. | # | WASHER | ﾜｯｼｬ | 4 | [EXE][EXK][EXN] |
| 5 | NO PART NO. | #* | O-RING | Oﾘﾝｸﾞ | 1 | [EXE][EXK][EXN] |
| 6 | NO PART NO. | #* | SEAL,OIL | ｼｰﾙ | 1 | [EXE][EXK][EXN] |
| 7 | NO PART NO. | #* | RACE,BEARING | ﾚｰｽ | 1 | [EXE][EXK][EXN] |
| 8 | NO PART NO. | #* | BEARING,NEEDLE | ﾍﾞｱﾘﾝｸﾞ | 1 | [EXE][EXK][EXN] |
| 9 | NO PART NO. | #* | RACE,BEARING | ﾚｰｽ | 1 | [EXE][EXK][EXN] |
| 10 | NO PART NO. | #* | O-RING | Oﾘﾝｸﾞ | 1 | [EXE][EXK][EXN] |
| 11 | NO PART NO. | # | SPACER | ｽﾍﾟｰｻ | 1 | [EXE][EXK][EXN] |
| 12 | NO PART NO. | # | GEROTOR | ｼﾞﾛｰﾀ | 1 | [EXE][EXK][EXN] |
| 13 | NO PART NO. | # | CAP,END | ｷｬｯﾌﾟ | 1 | [EXE][EXK][EXN] |
| 14 | NO PART NO. | # | BOLT | ﾎﾞﾙﾄ | 6 | [EXE][EXK][EXN] |
| 15 | NO PART NO. | # | SPACER | ｽﾍﾟｰｻ | 1 | [EXE][EXK][EXN] |
| 16 | NO PART NO. | # | SHAFT,DRIVE | ｼｬﾌﾄ | 1 | [EXE][EXK][EXN] |
| 17 | NO PART NO. | # | SLEEVE | ｽﾘｰﾌﾞ | 1 | [EXE][EXK][EXN] |
| 18 | NO PART NO. | # | HOUSING | ﾊｳｼﾞﾝｸﾞ | 1 | [EXE][EXK][EXN] |
| 19 | NO PART NO. | # | BALL,STEEL | ﾎﾞｰﾙ | 1 | [EXE][EXK][EXN] |
| 20 | NO PART NO. | # | BOLT | ﾎﾞﾙﾄ | 1 | [EXE][EXK][EXN] |
| 21 | NO PART NO. | #* | O-RING | Oﾘﾝｸﾞ | 1 | [EXE][EXK][EXN] |
| 22 | NO PART NO. | # | SPRING | ｽﾌﾟﾘﾝｸﾞ | 1 | [EXE][EXK][EXN] |
| 23 | NO PART NO. | # | PIN | ﾋﾟﾝ | 1 | [EXE][EXK][EXN] |
| 24 | 01113-10035 | | BOLT | ﾎﾞﾙﾄ | 4 | [EXE][EXK][EXN] |
| 25 | 02011-00010 | | WASHER | ﾜｯｼｬ | 4 | [EXE][EXK][EXN] |

## FIG.97 ORBITROL FITTING

(F7024140) オービットロールフィッティング

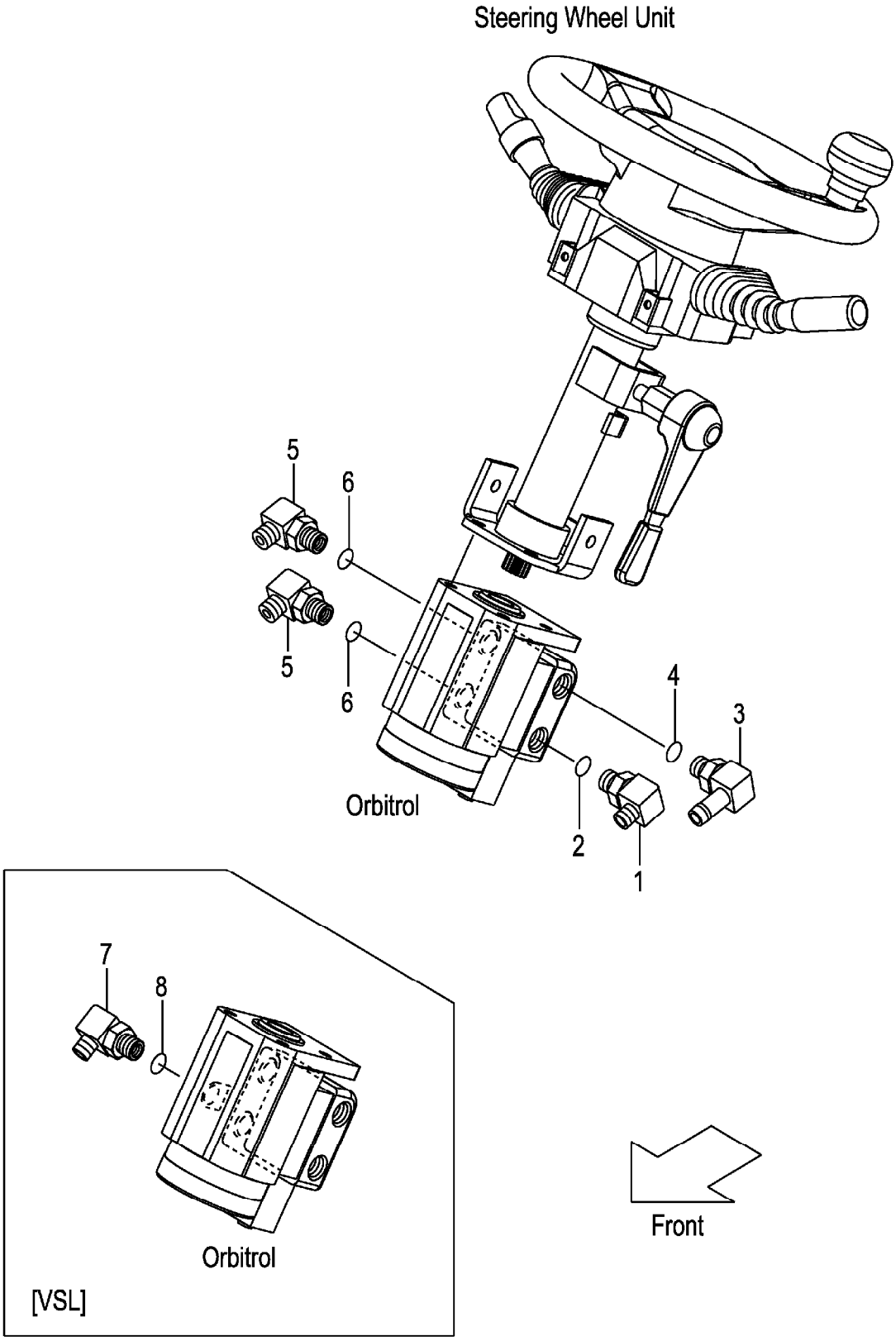

A:FG20C13 FG20T13 FG25C13 FG25T13 D:FD20C13 FD20T13 FD25C13 FD25T13
B:FG20C3 FG20T3 FG25C3 FG25T3 E:FD20C3 FD20T3 FD25C3 FD25T3
C:FG20W3 FG25W3 F:FD20W3 FD25W3

**FIG.97**
(F7024140)

| Item No | Part No. | Mark | Description | | Req'd | Remarks : Serial No. |
|---|---|---|---|---|---|---|
| A1 | 24237-62331 | | ELBOW-ASSY | ｴﾙﾎﾞｱｯｾﾝ | 1 | INC.1,2 |
| 1 | NO PART NO. | # | ELBOW | ｴﾙﾎﾞ | 1 | |
| 2 | 03320-00140 | | O-RING | Oﾘﾝｸﾞ | 1 | |
| A2 | 243C7-80201 | | FITTING-ASSY,HOSE | ﾎｰｽﾌｨｯﾃｨﾝｸﾞｱｯｾﾝ | 1 | INC.3,4 |
| 3 | NO PART NO. | # | FITTING,HOSE | ﾌｨｯﾃｨﾝｸﾞ | 1 | |
| 4 | 03320-00140 | | O-RING | Oﾘﾝｸﾞ | 1 | |
| A3 | 04150-20303 | | ELBOW-ASSY | ｴﾙﾎﾞｱｯｾﾝ | 2 | INC.5,6 |
| 5 | NO PART NO. | # | ELBOW | ｴﾙﾎﾞ | 2 | |
| 6 | 03320-00140 | | O-RING | Oﾘﾝｸﾞ | 2 | |
| A4 | 04150-20202 | | ELBOW-ASSY | ｴﾙﾎﾞｱｯｾﾝ | 1 | [VSL] INC.7,8 |
| 7 | NO PART NO. | # | ELBOW | ｴﾙﾎﾞ | 1 | [VSL] |
| 8 | 03320-00110 | | O-RING | Oﾘﾝｸﾞ | 1 | [VSL] |

# FIG.98 STEERING AXLE

(F7024310) ステアリング゛アクスル

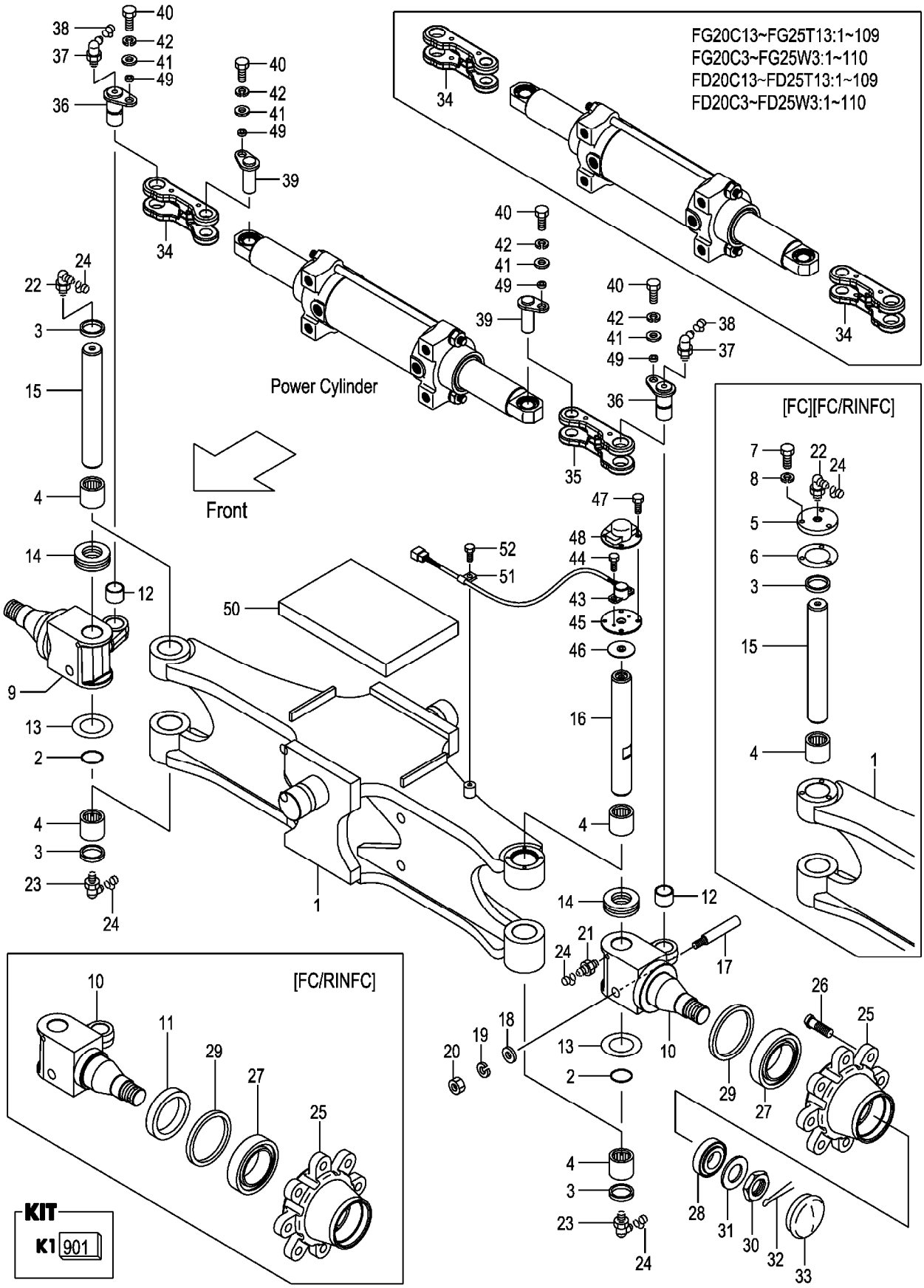

A:FG20C13 FG20T13 FG25C13 FG25T13 C:FD20C13 FD20T13 FD25C13 FD25T13 (F7024310)
B:FG20C3 FG20T3 FG25C3 FG25T3 FG20W3 FG25W3 D:FD20C3 FD20T3 FD25C3 FD25T3 FD20W3 FD25W3

| Item No | Part No. | Mark | Description | | Req'd | Remarks : Serial No. |
|---|---|---|---|---|---|---|
| A1 | 22N54-30101 | | AXLE-ASSY,STEERING | ｽﾃｱﾘﾝｸﾞｱｸｽﾙｱｯｾﾝ | 1 | A:1-128<br>B:1-247<br>C:1-126<br>D:1-525<br>INC.1-4,9,10,12-33 |
| - | 22N54-30102 | | AXLE-ASSY,STEERING | ｽﾃｱﾘﾝｸﾞｱｸｽﾙｱｯｾﾝ | 1 | A:129-<br>B:248-<br>C:127-<br>D:526-<br>INC.1-4,9,10,12-33 |
| - | 52N53-70101 | | AXLE-ASSY,STEERING | ｽﾃｱﾘﾝｸﾞｱｸｽﾙｱｯｾﾝ | 1 | A:1-128<br>B:1-247<br>C:1-126<br>D:1-525<br>[FC] INC.1-10,12-33 |
| - | 52N53-70102 | | AXLE-ASSY,STEERING | ｽﾃｱﾘﾝｸﾞｱｸｽﾙｱｯｾﾝ | 1 | A:129-<br>B:248-<br>C:127-<br>D:526-<br>[FC] INC.1-10,12-33 |
| - | 52N53-70201 | | AXLE-ASSY,STEERING | ｽﾃｱﾘﾝｸﾞｱｸｽﾙｱｯｾﾝ | 1 | A:1-128<br>B:1-247<br>C:1-126<br>D:1-525<br>[FC/RINFC] INC.1-33 |
| - | 52N53-70202 | | AXLE-ASSY,STEERING | ｽﾃｱﾘﾝｸﾞｱｸｽﾙｱｯｾﾝ | 1 | A:129-<br>B:248-<br>C:127-<br>D:526-<br>[FC/RINFC] INC.1-33 |
| 901 | 215E4-39801 | K1 | KIT,REPAIR | ﾘﾍﾟｱｷｯﾄ | 1 | INC.2-4,13,14,17-20,22 |
| 1 | 22N54-30121 | | AXLE,STEERING | ｱｸｽﾙ | 1 | A:1-128<br>B:1-247<br>C:1-126<br>D:1-525 |
| - | 22N54-30122 | | AXLE,STEERING | ｱｸｽﾙ | 1 | A:129-<br>B:248-<br>C:127-<br>D:526- |
| - | 52N53-70121 | | AXLE,STEERING | ｱｸｽﾙ | 1 | A:1-128<br>B:1-247<br>C:1-126<br>D:1-525<br>[FC][FC/RINFC] |
| - | 52N53-70122 | | AXLE,STEERING | ｱｸｽﾙ | 1 | A:129-<br>B:248-<br>C:127-<br>D:526-<br>[FC][FC/RINFC] |
| 2 | 23654-32161 | * | O-RING | Oﾘﾝｸﾞ | 2 | |

# FIG.98 STEERING AXLE

(F7024310) ステアリング゛アクスル

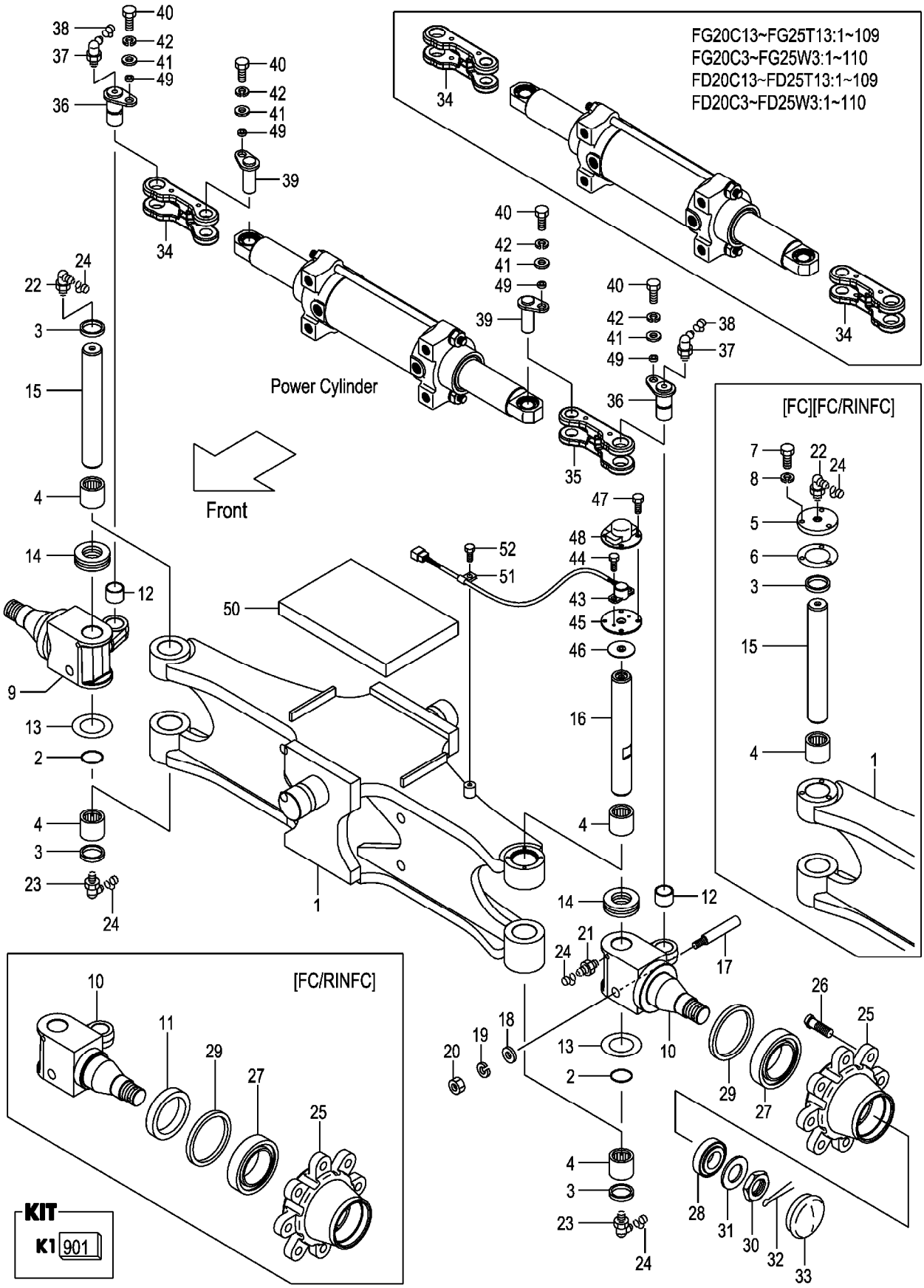

A:FG20C13 FG20T13 FG25C13 FG25T13 C:FD20C13 FD20T13 FD25C13 FD25T13
B:FG20C3 FG20T3 FG25C3 FG25T3 FG20W3 FG25W3 D:FD20C3 FD20T3 FD25C3 FD25T3 FD20W3 FD25W3

| Item No | Part No. | Mark | Description | | Req'd | Remarks : Serial No. |
|---|---|---|---|---|---|---|
| 3 | 214A4-32161 | * | SEAL,DUST | ｼｰﾙ | 3 | |
| 4 | 03146-13201 | * | BEARING,NEEDLE | ﾍﾞｱﾘﾝｸﾞ | 4 | |
| 5 | 514A3-72052 | | PLATE,CAP | ﾌﾟﾚｰﾄ | 1 | [FC][FC/RINFC] |
| 6 | 514A3-72062 | | PACKING | ﾊﾟｯｷﾝｸﾞ | 1 | [FC][FC/RINFC] |
| 7 | 01141-06012 | | BOLT | ﾎﾞﾙﾄ | 3 | [FC][FC/RINFC] |
| 8 | 02010-10006 | | WASHER | ﾜｯｼｬ | 3 | [FC][FC/RINFC] |
| 9 | 22N54-32501 | | KNUCKLE,RH | ﾅｯｸﾙ | 1 | |
| - | 52N53-72201 | | KNUCKLE,RH | ﾅｯｸﾙ | 1 | [FC/RINFC] |
| 10 | 22N54-32511 | | KNUCKLE,LH | ﾅｯｸﾙ | 1 | |
| - | 52N53-72211 | | KNUCKLE,LH | ﾅｯｸﾙ | 1 | [FC/RINFC] |
| 11 | 514A3-72211 | | SEAT,OIL-SEAL | ｼｰﾄ | 2 | [FC/RINFC] |
| 12 | 22N54-32481 | | BUSHING | ﾌﾞｯｼﾝｸﾞ | 2 | |
| 13 | 22214-30321 | * | SHIM | ｼﾑ | 6 | |
| 14 | 03126-83201 | * | BEARING,THRUST | ﾍﾞｱﾘﾝｸﾞ | 2 | |
| 15 | 24454-32232 | | KINGPIN | ｷﾝｸﾞﾋﾟﾝ | 1 | |
| 16 | 22N54-32201 | | KINGPIN | ｷﾝｸﾞﾋﾟﾝ | 1 | |
| 17 | 215E4-32341 | * | PIN,LOCK | ﾋﾟﾝ | 2 | |
| 18 | 02000-00010 | * | WASHER | ﾜｯｼｬ | 2 | |
| 19 | 02010-00010 | * | WASHER | ﾜｯｼｬ | 2 | |
| 20 | 01400-00010 | * | NUT | ﾅｯﾄ | 2 | |
| 21 | 214A8-52051 | | FITTING | ﾌｨｯﾃｨﾝｸﾞ | 1 | |
| 22 | 04901-00190 | * | FITTING | ﾌｨｯﾃｨﾝｸﾞ | 1 | |
| 23 | 04901-00191 | | FITTING | ﾌｨｯﾃｨﾝｸﾞ | 2 | |
| 24 | 22199-12401 | | CAP,NIPPLE | ｷｬｯﾌﾟ | 4 | |
| 25 | 214A4-32041 | | HUB,REAR | ﾊﾌﾞ | 2 | |
| 26 | 23654-32041 | | BOLT,HUB | ﾎﾞﾙﾄ | 16 | |
| 27 | 03071-30211 | | BEARING,TAPER-ROLLER | ﾍﾞｱﾘﾝｸﾞ | 2 | |
| 28 | 03071-30207 | | BEARING,TAPER-ROLLER | ﾍﾞｱﾘﾝｸﾞ | 2 | |
| 29 | 03217-08501 | | SEAL,OIL | ｼｰﾙ | 2 | |
| 30 | 01412-00030 | | NUT,CASTLE | ﾅｯﾄ | 2 | |
| 31 | 02000-00030 | | WASHER | ﾜｯｼｬ | 2 | |
| 32 | 02200-06055 | | PIN,COTTER | ﾋﾟﾝ | 2 | |
| 33 | 214A4-32051 | | CAP | ｷｬｯﾌﾟ | 2 | |
| 34 | 22N54-32801 | | YOKE | ﾖｰｸ | 2 | A,C:1-109 |
| | | | | | | B,D:1-110 |
| - | 22N54-32941 | | YOKE,RH | ﾖｰｸ | 1 | A:110-136 |
| | | | | | | B:111-302 |
| | | | | | | C:110-135 |
| | | | | | | D:111-704 |
| - | 22N54-32351 | | YOKE,RH | ﾖｰｸ | 1 | A:137- |
| | | | | | | B:303- |
| | | | | | | C:136- |
| | | | | | | D:705- |
| 35 | 22N54-32971 | | YOKE,LH | ﾖｰｸ | 1 | A:110-136 |
| | | | | | | B:111-302 |
| | | | | | | C:110-135 |
| | | | | | | D:111-704 |

# FIG.98 STEERING AXLE

(F7024310) ステアリング゛アクスル

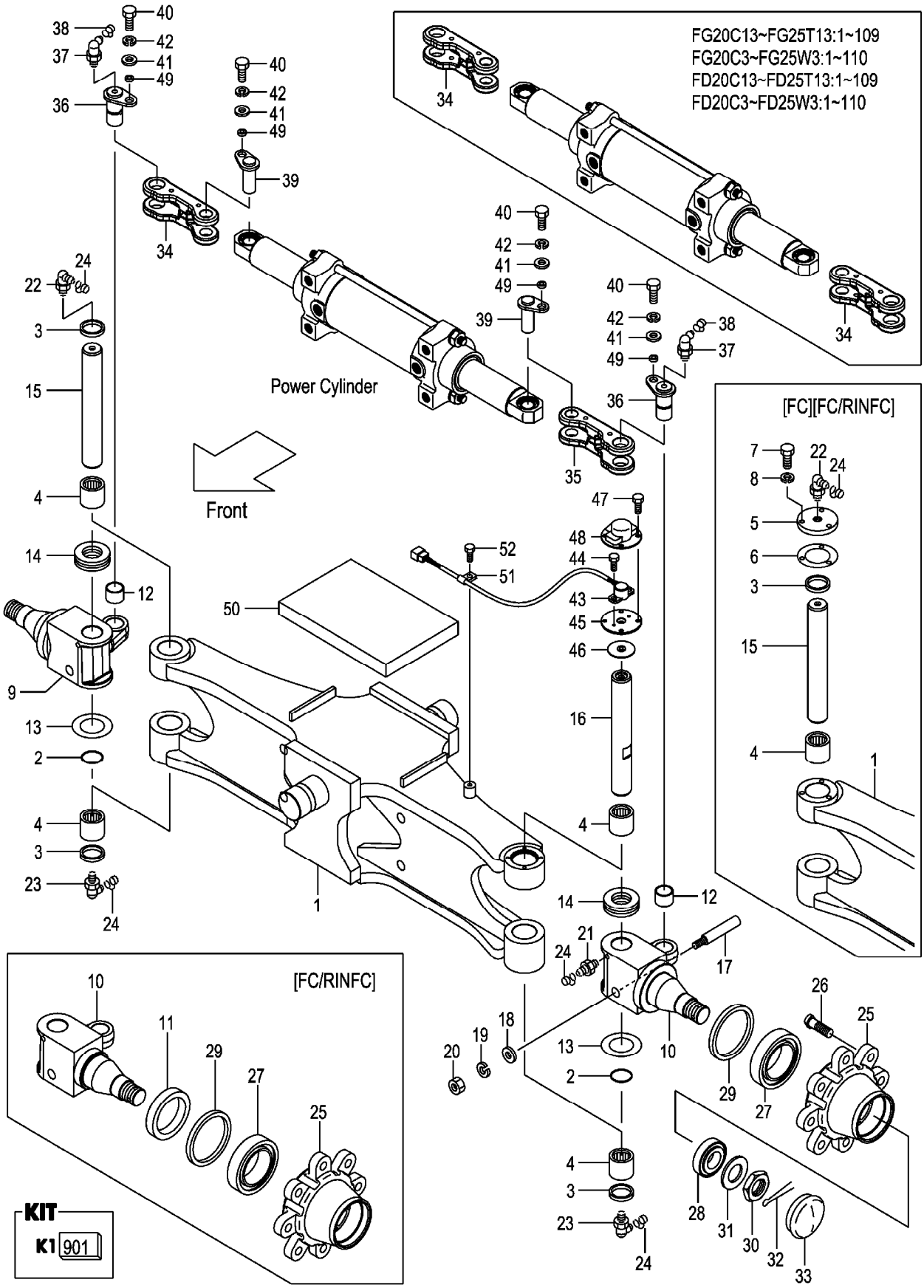

A:FG20C13 FG20T13 FG25C13 FG25T13 C:FD20C13 FD20T13 FD25C13 FD25T13 (F7024310)
B:FG20C3 FG20T3 FG25C3 FG25T3 FG20W3 FG25W3 D:FD20C3 FD20T3 FD25C3 FD25T3 FD20W3 FD25W3

| Item No | Part No. | Mark | Description | | Req'd | Remarks : Serial No. |
|---|---|---|---|---|---|---|
| - | 22N54-32361 | | YOKE,LH | ﾖｰｸ | 1 | A:137- |
| | | | | | | B:303- |
| | | | | | | C:136- |
| | | | | | | D:705- |
| 36 | 22N54-32131 | | PIN | ﾋﾟﾝ | 2 | |
| 37 | 04901-00190 | | FITTING | ﾌｨｯﾃｨﾝｸﾞ | 2 | |
| 38 | 22199-12401 | | CAP,NIPPLE | ｷｬｯﾌﾟ | 2 | |
| 39 | 22N54-32151 | | PIN | ﾋﾟﾝ | 2 | |
| 40 | 01103-08016 | | BOLT | ﾎﾞﾙﾄ | 4 | |
| 41 | 02000-00008 | | WASHER | ﾜｯｼｬ | 4 | |
| 42 | 02011-00008 | | WASHER | ﾜｯｼｬ | 4 | |
| 43 | 22N54-32211 | | POTENTIOMETER | ﾎﾟﾃﾝｼｵﾒｰﾀ | 1 | |
| 44 | 01185-04010 | | BOLT | ﾎﾞﾙﾄ | 2 | |
| 45 | 22N54-32221 | | ADAPTER | ｱﾀﾞﾌﾟﾀ | 1 | |
| 46 | 22N54-32231 | | PACKING | ﾊﾟｯｷﾝｸﾞ | 1 | |
| 47 | 01030-06010 | | BOLT | ﾎﾞﾙﾄ | 4 | |
| 48 | 22N54-32241 | | COVER,POTENTIOMETER | ｶﾊﾞｰ | 1 | |
| 49 | 22N54-32181 | | COLLAR | ｶﾗｰ | 4 | |
| 50 | 22N54-32401 | | RUBBER | ﾗﾊﾞｰ | 1 | A:1-128 |
| | | | | | | B:1-247 |
| | | | | | | C:1-126 |
| | | | | | | D:1-525 |
| - | 22N54-32402 | | RUBBER | ﾗﾊﾞｰ | 1 | A:129- |
| | | | | | | B:248- |
| | | | | | | C:127- |
| | | | | | | D:526- |
| 51 | 26602-42041 | | CLIP | ｸﾘｯﾌﾟ | 1 | |
| 52 | 01185-08016 | | BOLT | ﾎﾞﾙﾄ | 1 | |

# FIG.99 STEERING AXLE [EXE][EXK][EXN]

(F7024320) ステアリング゛アクスル

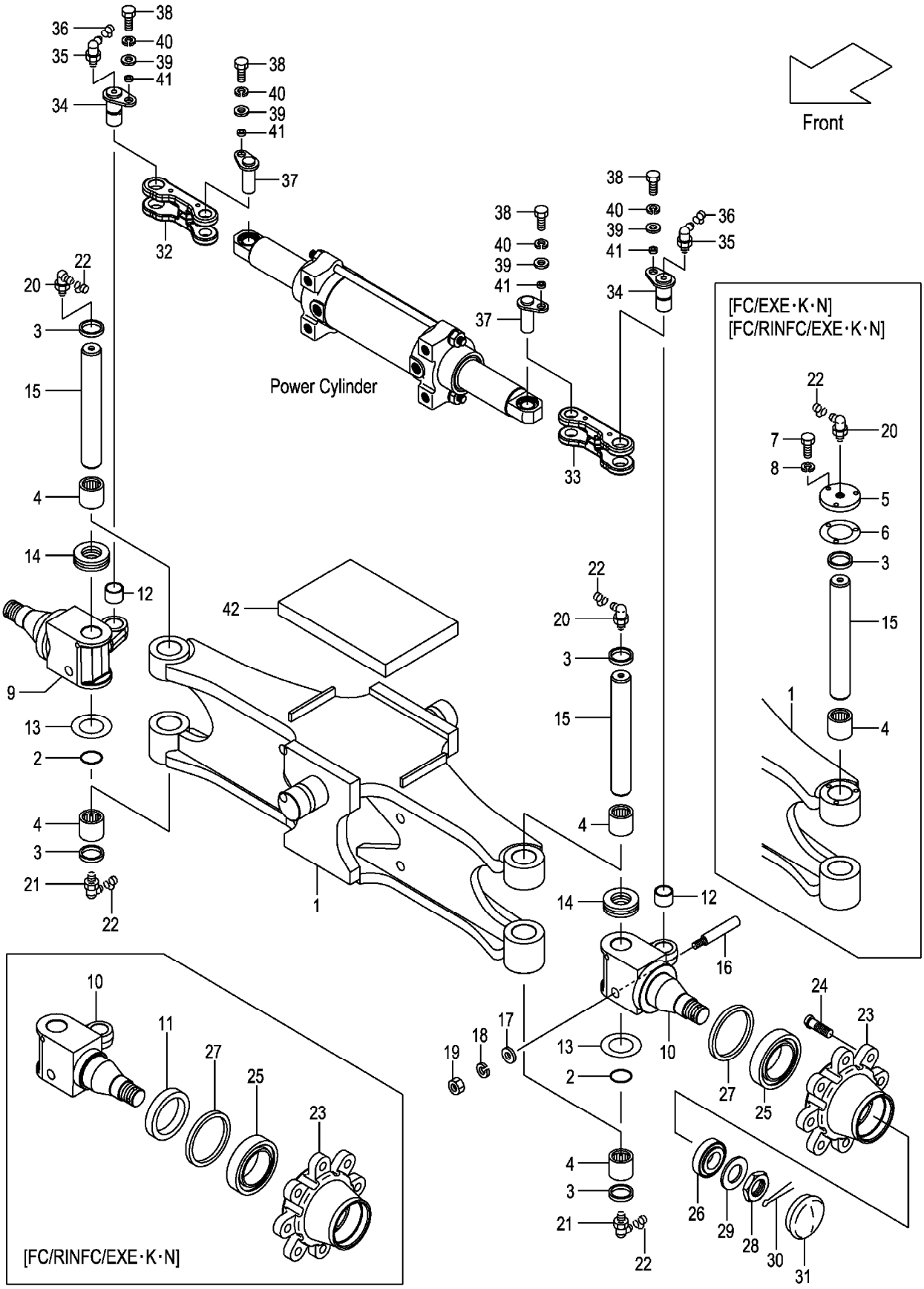

A:FG20C3 FG20T3 FG25C3 FG25T3
B:FD20C3 FD20T3 FD25C3 FD25T3

| Item No | Part No. | Mark | Description | | Req'd | Remarks : Serial No. |
|---|---|---|---|---|---|---|
| A1 | 52N53-80101 | | AXLE-ASSY,STEERING | ｽﾃｱﾘﾝｸﾞｱｸｽﾙｱｯｾﾝ | 1 | A:1-247<br>B:1-525<br>[EXE][EXK][EXN]<br>INC.1-4,9,10,12-33 |
| - | 52N53-80102 | | AXLE-ASSY,STEERING | ｽﾃｱﾘﾝｸﾞｱｸｽﾙｱｯｾﾝ | 1 | A:248-<br>B:526-<br>[EXE][EXK][EXN]<br>INC.1-4,9,10,12-33 |
| - | 52N53-70301 | | AXLE-ASSY,STEERING | ｽﾃｱﾘﾝｸﾞｱｸｽﾙｱｯｾﾝ | 1 | A:1-247<br>B:1-525<br>[FC/EXE&K&N] INC.1-10,12-31 |
| - | 52N53-70302 | | AXLE-ASSY,STEERING | ｽﾃｱﾘﾝｸﾞｱｸｽﾙｱｯｾﾝ | 1 | A:248-<br>B:526-<br>[FC/EXE&K&N] INC.1-10,12-31 |
| - | 52N53-70401 | | AXLE-ASSY,STEERING | ｽﾃｱﾘﾝｸﾞｱｸｽﾙｱｯｾﾝ | 1 | A:1-247<br>B:1-525<br>[FC/RINFC/EXE&K&N] INC.1-31 |
| - | 52N53-70402 | | AXLE-ASSY,STEERING | ｽﾃｱﾘﾝｸﾞｱｸｽﾙｱｯｾﾝ | 1 | A:248-<br>B:526-<br>[FC/RINFC/EXE&K&N] INC.1-31 |
| 1 | 52N53-80121 | | AXLE,STEERING | ｱｸｽﾙ | 1 | A:1-247<br>B:1-525<br>[EXE][EXK][EXN] |
| - | 52N53-80122 | | AXLE,STEERING | ｱｸｽﾙ | 1 | A:248-<br>B:526-<br>[EXE][EXK][EXN] |
| - | 52N53-70321 | | AXLE,STEERING | ｱｸｽﾙ | 1 | A:1-247<br>B:1-525<br>[FC/EXE&K&N]<br>[FC/RINFC/EXE&K&N] |
| - | 52N53-70322 | | AXLE,STEERING | ｱｸｽﾙ | 1 | A:248-<br>B:526-<br>[FC/EXE&K&N]<br>[FC/RINFC/EXE&K&N] |
| 2 | 23654-32161 | | O-RING | Oﾘﾝｸﾞ | 2 | [EXE][EXK][EXN] |
| 3 | 214A4-32161 | | SEAL,DUST | ｼｰﾙ | 4 | [EXE][EXK][EXN] |
| 4 | 03146-13201 | | BEARING,NEEDLE | ﾍﾞｱﾘﾝｸﾞ | 4 | [EXE][EXK][EXN] |
| 5 | 514A3-72052 | | PLATE,CAP | ﾌﾟﾚｰﾄ | 2 | [FC/EXE&K&N]<br>[FC/RINFC/EXE&K&N] |
| 6 | 514A3-72062 | | PACKING | ﾊﾟｯｷﾝｸﾞ | 2 | [FC/EXE&K&N]<br>[FC/RINFC/EXE&K&N] |
| 7 | 01141-06012 | | BOLT | ﾎﾞﾙﾄ | 6 | [FC/EXE&K&N]<br>[FC/RINFC/EXE&K&N] |
| 8 | 02010-10006 | | WASHER | ﾜｯｼｬ | 6 | [FC/EXE&K&N]<br>[FC/RINFC/EXE&K&N] |
| 9 | 22N54-32501 | | KNUCKLE,RH | ﾅｯｸﾙ | 1 | [EXE][EXK][EXN] |
| - | 52N53-72201 | | KNUCKLE,RH | ﾅｯｸﾙ | 1 | [FC/RINFC/EXE&K&N] |
| 10 | 22N54-32511 | | KNUCKLE,LH | ﾅｯｸﾙ | 1 | [EXE][EXK][EXN] |
| - | 52N53-72211 | | KNUCKLE,LH | ﾅｯｸﾙ | 1 | [FC/RINFC/EXE&K&N] |
| 11 | 514A3-72211 | | SEAT,OIL-SEAL | ｼｰﾄ | 2 | [FC/RINFC/EXE&K&N] |

# FIG.99 STEERING AXLE [EXE][EXK][EXN]

(F7024320) ステアリング゛アクスル

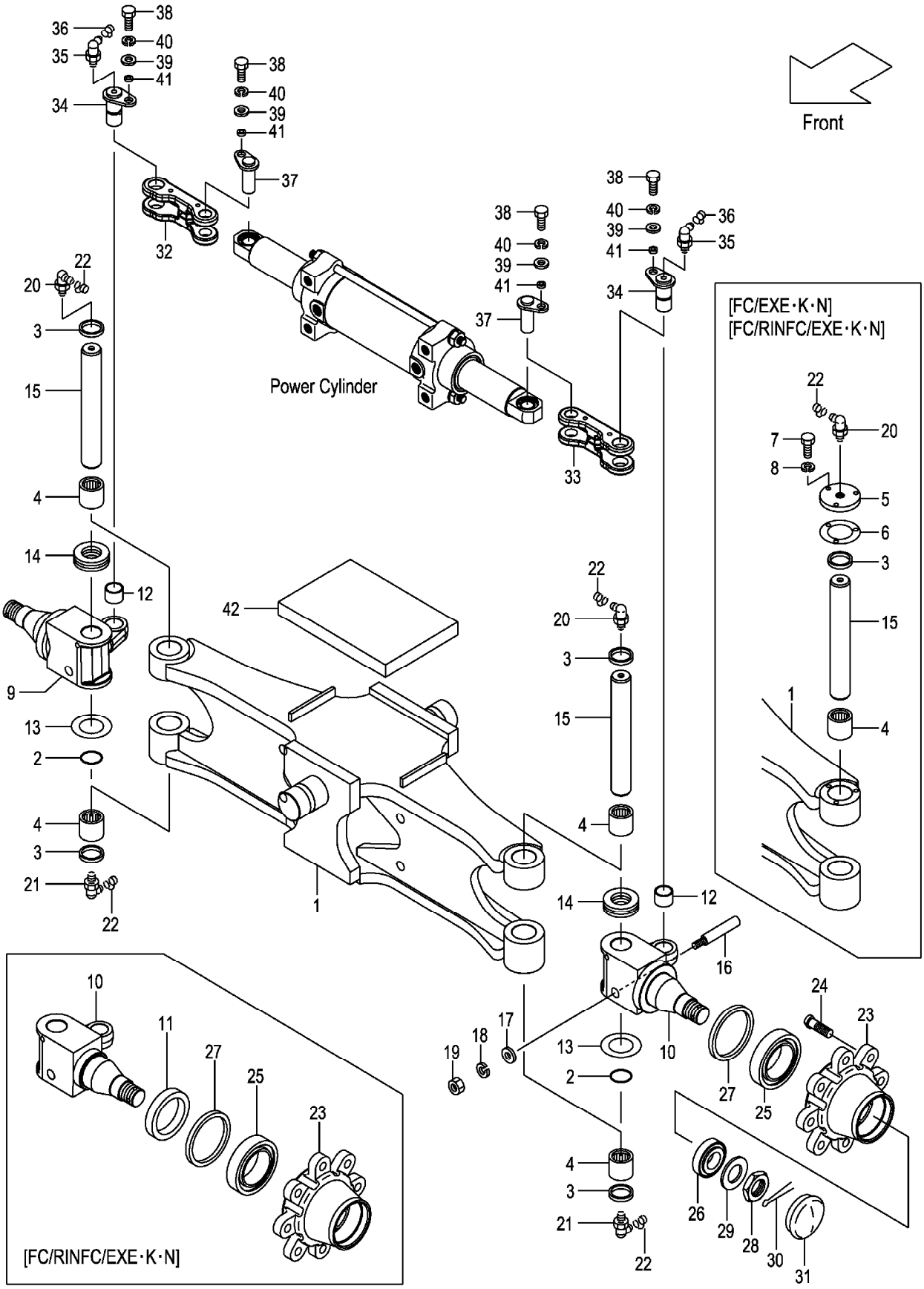

A:FG20C3 FG20T3 FG25C3 FG25T3
B:FD20C3 FD20T3 FD25C3 FD25T3

| Item No | Part No. | Mark | Description | | Req'd | Remarks : Serial No. |
|---|---|---|---|---|---|---|
| 12 | 22N54-32481 | | BUSHING | ﾌﾞｯｼﾝｸﾞ | 2 | [EXE][EXK][EXN] |
| 13 | 22214-30321 | | SHIM | ｼﾑ | 6 | [EXE][EXK][EXN] |
| 14 | 03126-83201 | | BEARING,THRUST | ﾍﾞｱﾘﾝｸﾞ | 2 | [EXE][EXK][EXN] |
| 15 | 24454-32232 | | KINGPIN | ｷﾝｸﾞﾋﾟﾝ | 2 | [EXE][EXK][EXN] |
| 16 | 215E4-32341 | | PIN,LOCK | ﾋﾟﾝ | 2 | [EXE][EXK][EXN] |
| 17 | 02000-00010 | | WASHER | ﾜｯｼｬ | 2 | [EXE][EXK][EXN] |
| 18 | 02010-00010 | | WASHER | ﾜｯｼｬ | 2 | [EXE][EXK][EXN] |
| 19 | 01400-00010 | | NUT | ﾅｯﾄ | 2 | [EXE][EXK][EXN] |
| 20 | 04901-00190 | | FITTING | ﾌｨｯﾃｨﾝｸﾞ | 2 | [EXE][EXK][EXN] |
| 21 | 04901-00191 | | FITTING | ﾌｨｯﾃｨﾝｸﾞ | 2 | [EXE][EXK][EXN] |
| 22 | 22199-12401 | | CAP,NIPPLE | ｷｬｯﾌﾟ | 4 | [EXE][EXK][EXN] |
| 23 | 214A4-32041 | | HUB,REAR | ﾊﾌﾞ | 2 | [EXE][EXK][EXN] |
| 24 | 23654-32041 | | BOLT,HUB | ﾎﾞﾙﾄ | 16 | [EXE][EXK][EXN] |
| 25 | 03071-30211 | | BEARING,TAPER-ROLLER | ﾍﾞｱﾘﾝｸﾞ | 2 | [EXE][EXK][EXN] |
| 26 | 03071-30207 | | BEARING,TAPER-ROLLER | ﾍﾞｱﾘﾝｸﾞ | 2 | [EXE][EXK][EXN] |
| 27 | 03217-08501 | | SEAL,OIL | ｼｰﾙ | 2 | [EXE][EXK][EXN] |
| 28 | 01412-00030 | | NUT,CASTLE | ﾅｯﾄ | 2 | [EXE][EXK][EXN] |
| 29 | 02000-00030 | | WASHER | ﾜｯｼｬ | 2 | [EXE][EXK][EXN] |
| 30 | 02200-06055 | | PIN,COTTER | ﾋﾟﾝ | 2 | [EXE][EXK][EXN] |
| 31 | 214A4-32051 | | CAP | ｷｬｯﾌﾟ | 2 | [EXE][EXK][EXN] |
| 32 | 22N54-32941 | | YOKE,RH | ﾖｰｸ | 1 | A:1-302<br>B:1-704<br>[EXE][EXK][EXN] |
| - | 22N54-32351 | | YOKE,RH | ﾖｰｸ | 1 | A:303-<br>B:705-<br>[EXE][EXK][EXN] |
| 33 | 22N54-32971 | | YOKE,LH | ﾖｰｸ | 1 | A:1-302<br>B:1-704<br>[EXE][EXK][EXN] |
| - | 22N54-32361 | | YOKE,LH | ﾖｰｸ | 1 | A:303-<br>B:705-<br>[EXE][EXK][EXN] |
| 34 | 22N54-32131 | | PIN | ﾋﾟﾝ | 2 | [EXE][EXK][EXN] |
| 35 | 04901-00190 | | FITTING | ﾌｨｯﾃｨﾝｸﾞ | 2 | [EXE][EXK][EXN] |
| 36 | 22199-12401 | | CAP,NIPPLE | ｷｬｯﾌﾟ | 2 | [EXE][EXK][EXN] |
| 37 | 22N54-32151 | | PIN | ﾋﾟﾝ | 2 | [EXE][EXK][EXN] |
| 38 | 01103-08016 | | BOLT | ﾎﾞﾙﾄ | 4 | [EXE][EXK][EXN] |
| 39 | 02000-00008 | | WASHER | ﾜｯｼｬ | 4 | [EXE][EXK][EXN] |
| 40 | 02011-00008 | | WASHER | ﾜｯｼｬ | 4 | [EXE][EXK][EXN] |
| 41 | 22N54-32181 | | COLLAR | ｶﾗｰ | 4 | [EXE][EXK][EXN] |
| 42 | 22N54-32401 | | RUBBER | ﾗﾊﾞｰ | 1 | A:1-247<br>B:1-525<br>[EXE][EXK][EXN] |
| - | 22N54-32402 | | RUBBER | ﾗﾊﾞｰ | 1 | A:248-<br>B:526-<br>[EXE][EXK][EXN] |

# M E M O

# M E M O

# FIG.100 AXLE SUPPORT

(F7024330) アクスルサポート

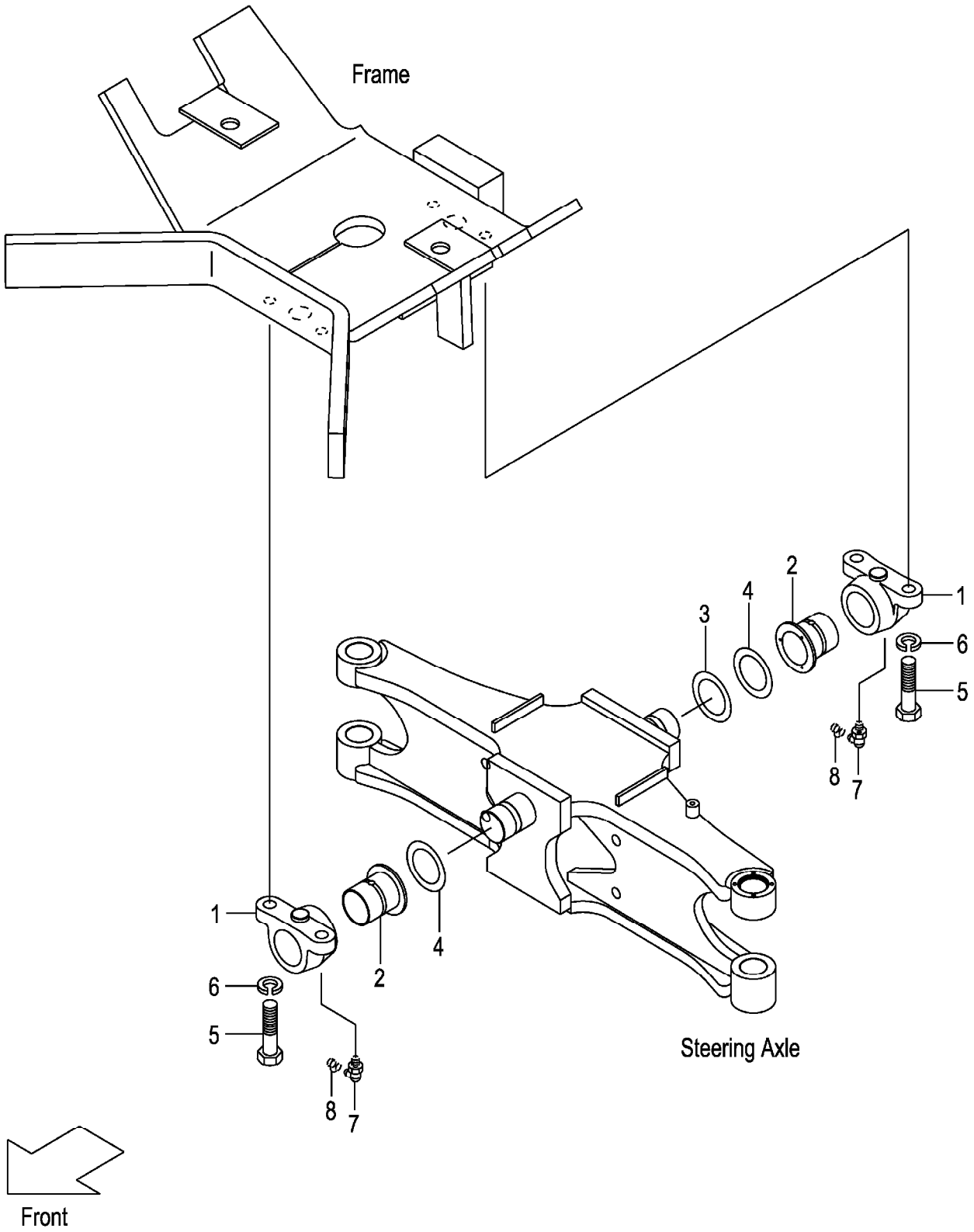

A:FG20C13 FG20T13 FG25C13 FG25T13 C:FD20C13 FD20T13 FD25C13 FD25T13 (F7024330)
B:FG20C3 FG20T3 FG25C3 FG25T3 FG20W3 FG25W3 D:FD20C3 FD20T3 FD25C3 FD25T3 FD20W3 FD25W3

| Item No | Part No. | Mark | Description | | Req'd | Remarks : Serial No. |
|---|---|---|---|---|---|---|
| 1 | 22N54-32311 | | SUPPORT,REAR-AXLE | ｻﾎﾟｰﾄ | 2 | |
| 2 | 22N54-32321 | | BUSHING,AXLE-SUPPORT | ﾌﾞｯｼﾝｸﾞ | 2 | |
| 3 | 214A4-32201 | | SHIM,T-0.5 | ｼﾑ | 1 | |
| 4 | 214A4-32211 | | SHIM,T-1.0 | ｼﾑ | 2 | |
| 5 | 01100-16045 | | BOLT | ﾎﾞﾙﾄ | 4 | |
| 6 | 02010-00016 | | WASHER | ﾜｯｼｬ | 4 | |
| 7 | 04901-00190 | | FITTING | ﾌｨｯﾃｨﾝｸﾞ | 2 | |
| 8 | 22199-12401 | | CAP,NIPPLE | ｷｬｯﾌﾟ | 2 | |

# FIG.101 HUB NUT

(F7024410) ﾊﾌﾞﾅｯﾄ

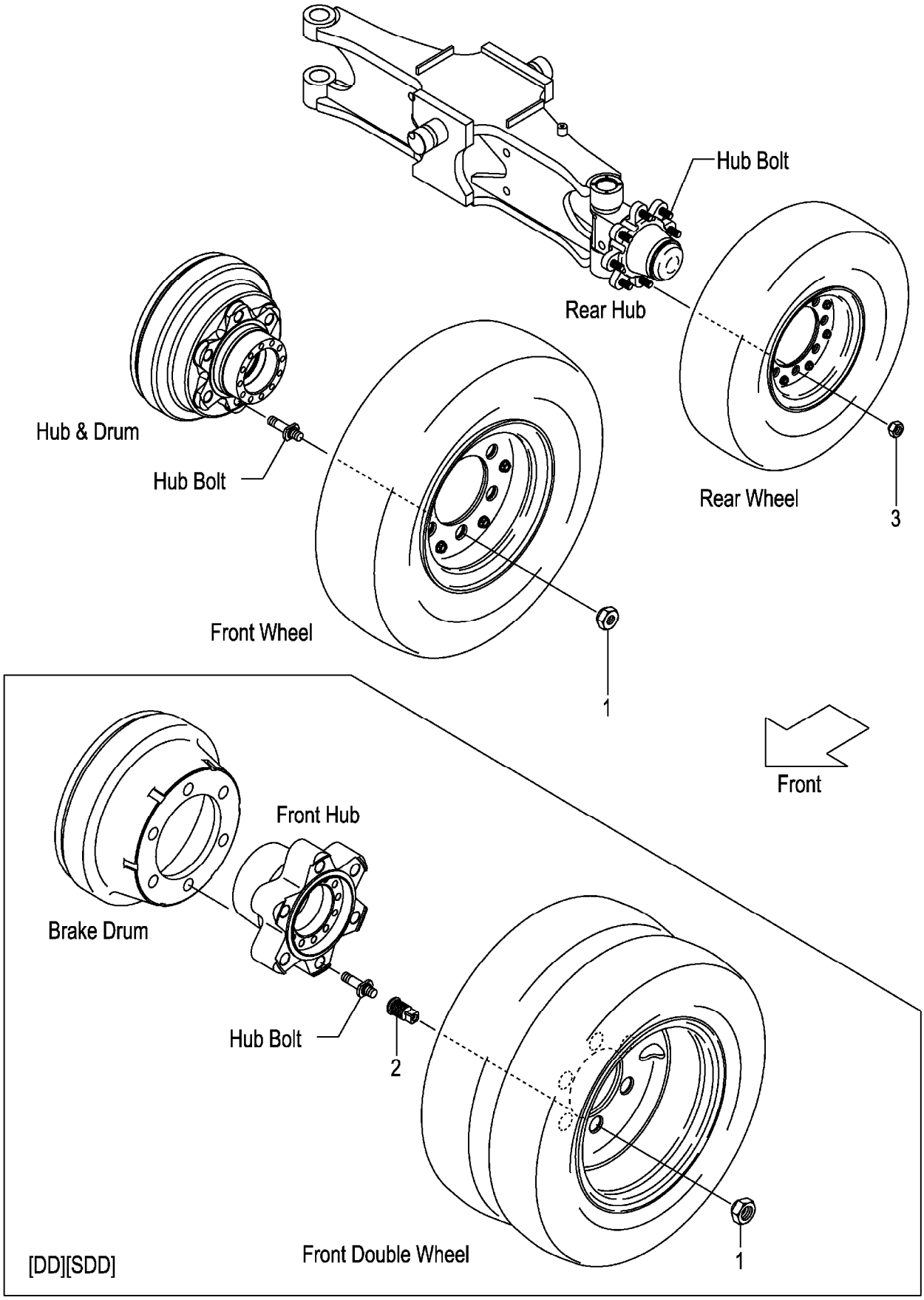

A:FG20C13 FG20T13 FG25C13 FG25T13 C:FD20C13 FD20T13 FD25C13 FD25T13 (F7024410)
B:FG20C3 FG20T3 FG25C3 FG25T3 FG20W3 FG25W3 D:FD20C3 FD20T3 FD25C3 FD25T3 FD20W3 FD25W3

| Item No | Part No. | Mark | Description | Req'd | Remarks : Serial No. |
|---|---|---|---|---|---|
| 1 | 24354-32311 | | NUT,HUB ナット | 12 | (FRONT) |
| - | 57045-52141 | | NUT,HUB ナット | 12 | [FC](FRONT) |
| - | 23813-00081 | | NUT,HUB ナット | 12 | [DD][SDD](FRONT) |
| - | 514A3-72101 | | NUT,HUB ナット | 12 | [FC/DD][FC/SDD](FRONT) |
| 2 | 23813-00071 | | NUT,INNER ナット | 12 | [DD][SDD][FC/DD][FC/SDD] (FRONT) |
| 3 | 23654-34051 | | NUT,HUB ナット | 16 | (REAR) |
| - | 57045-52151 | | NUT,HUB ナット | 16 | [FC](REAR) |

# FIG.102 FENDER [DD][SDD][TUJSF]

(F7024420) ﾌｪﾝﾀﾞ

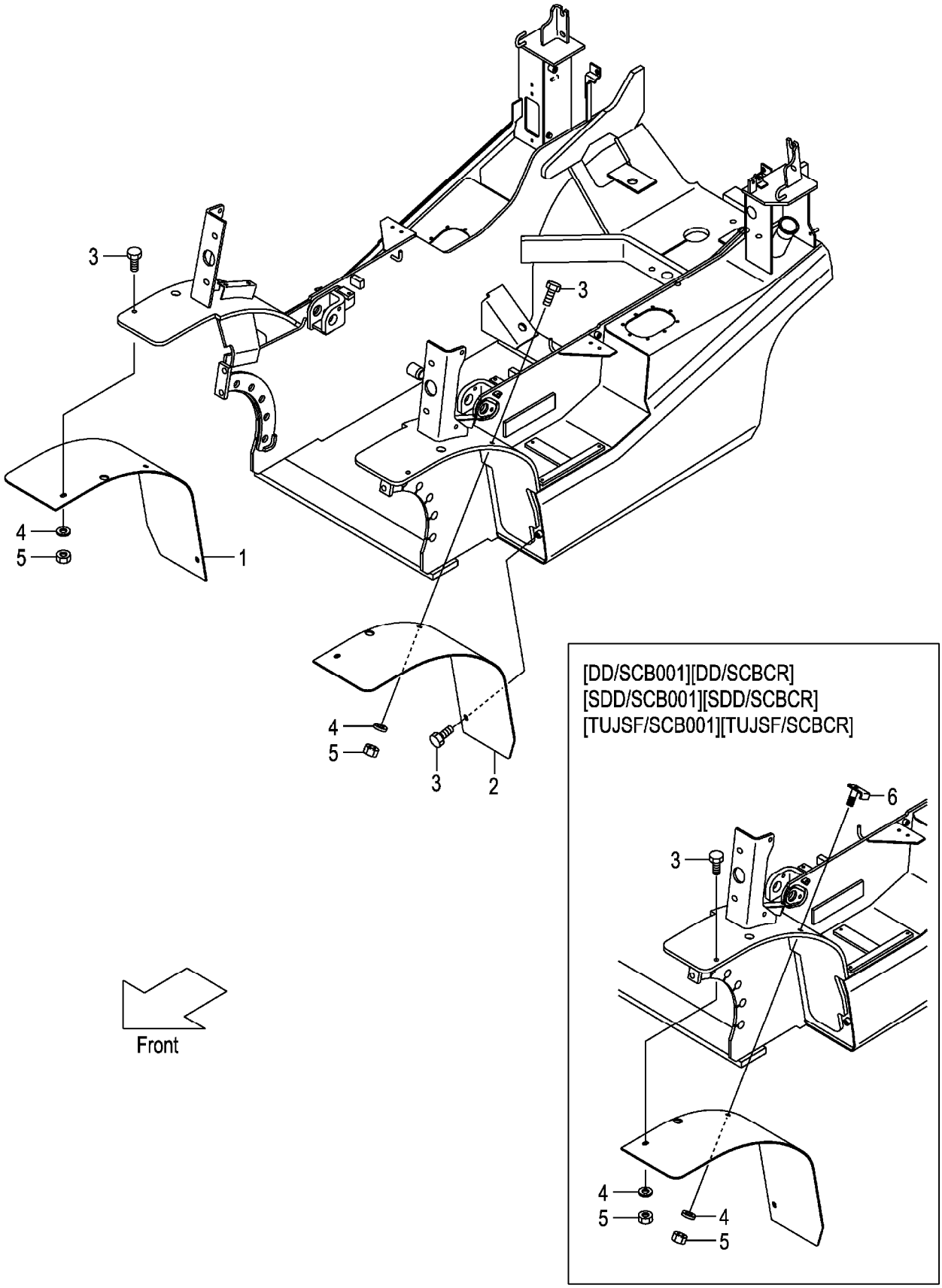

A:FG20C13 FG20T13 FG25C13 FG25T13 D:FD20C13 FD20T13 FD25C13 FD25T13
B:FG20C3 FG20T3 FG25C3 FG25T3 E:FD20C3 FD20T3 FD25C3 FD25T3
C:FG20W3 FG25W3 F:FD20W3 FD25W3

**FIG.102**
(F7024420)

| Item No | Part No. | Mark | Description | | Req'd | Remarks : Serial No. |
|---|---|---|---|---|---|---|
| 1 | 52N57-42001 | | FENDER,FRONT,RH | ﾌｪﾝﾀﾞ | 1 | [DD] |
| - | 52N57-42021 | | FENDER,FRONT,RH | ﾌｪﾝﾀﾞ | 1 | [SDD] |
| - | 52N57-42041 | | FENDER,FRONT,RH | ﾌｪﾝﾀﾞ | 1 | [TUJSF] |
| 2 | 52N57-42011 | | FENDER,FRONT,LH | ﾌｪﾝﾀﾞ | 1 | [DD] |
| - | 52N57-42031 | | FENDER,FRONT,LH | ﾌｪﾝﾀﾞ | 1 | [SDD] |
| - | 52N57-42051 | | FENDER,FRONT,LH | ﾌｪﾝﾀﾞ | 1 | [TUJSF] |
| 3 | 01186-10030 | | BOLT | ﾎﾞﾙﾄ | 6 | [DD][SDD][TUJSF] |
| - | 01186-10030 | | BOLT | ﾎﾞﾙﾄ | 4 | B,C,E,F<br>[DD/SCB001][SDD/SCB001]<br>[TUJSF/SCB001] |
| - | 01186-10030 | | BOLT | ﾎﾞﾙﾄ | 4 | B,C,E<br>[DD/SCBCR][SDD/SCBCR]<br>[TUJSF/SCBCR] |
| 4 | 02000-00010 | | WASHER | ﾜｯｼｬ | 4 | [DD][SDD][TUJSF] |
| 5 | 01400-00010 | | NUT | ﾅｯﾄ | 4 | [DD][SDD][TUJSF] |
| 6 | 52N55-32211 | | BOLT,FENDER | ﾎﾞﾙﾄ | 2 | B,C,E,F<br>[DD/SCB001][SDD/SCB001]<br>[TUJSF/SCB001] |
| - | 52N55-32211 | | BOLT,FENDER | ﾎﾞﾙﾄ | 2 | B,C,E<br>[DD/SCBCR][SDD/SCBCR]<br>[TUJSF/SCBCR] |

# FIG.103 FRONT WHEEL

(F7024430) フロントホイール

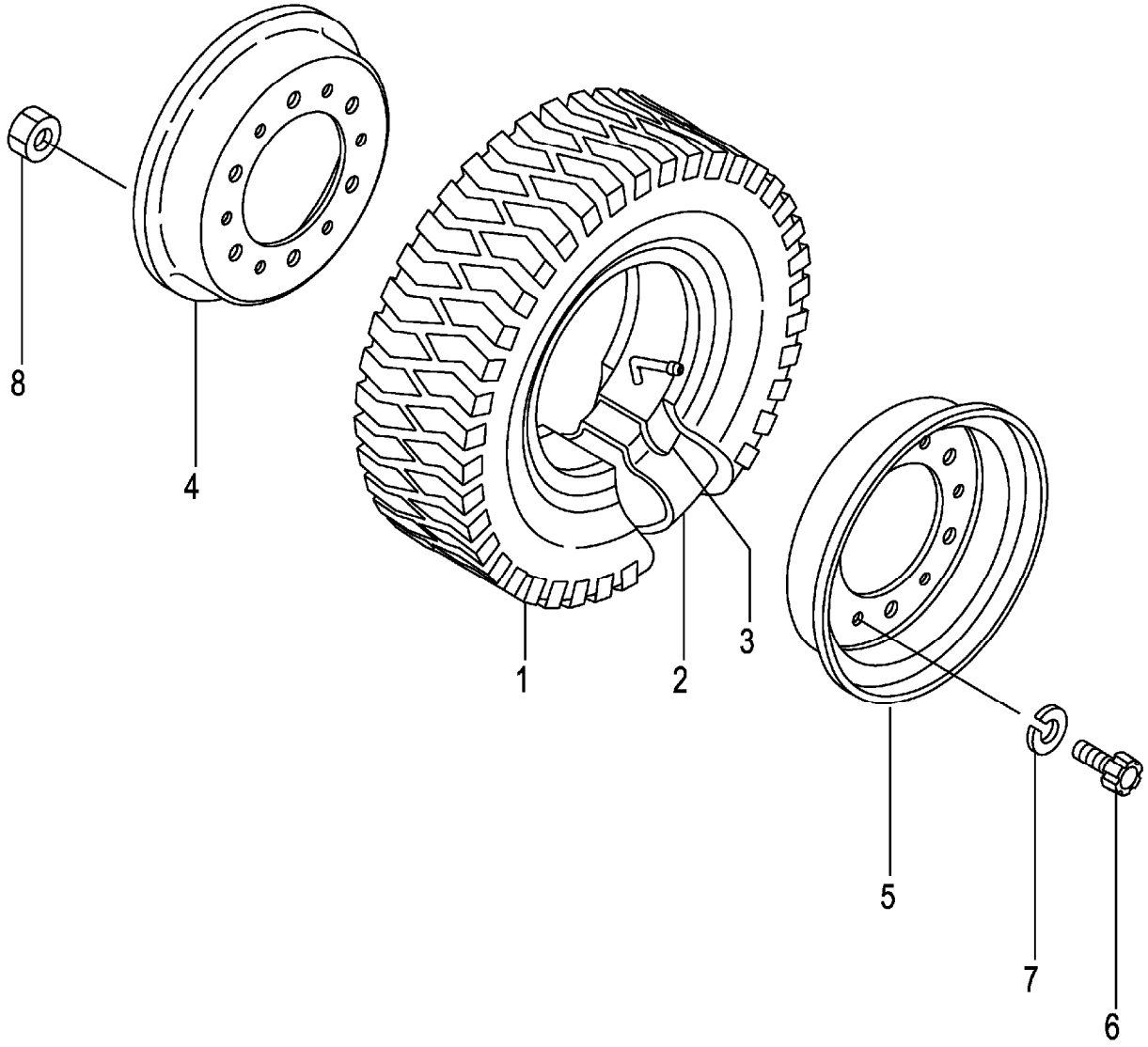

A:FG20C13 FG20T13 FG25C13 FG25T13 C:FD20C13 FD20T13 FD25C13 FD25T13 (F7024430)
B:FG20C3 FG20T3 FG25C3 FG25T3 FG20W3 FG25W3 D:FD20C3 FD20T3 FD25C3 FD25T3 FD20W3 FD25W3

| Item No | Part No. | Mark | Description | | Req'd | Remarks : Serial No. |
|---|---|---|---|---|---|---|
| A1 | 53456-80902 | | WHEEL-ASSY,FRONT | ﾌﾛﾝﾄﾎｲｰﾙｱｯｾﾝ | 2 | INC.1-8 |
| 1 | 06006-70012 | | TIRE,700-12-12 | ﾀｲﾔ | 2 | |
| 2 | 06711-70012 | | TUBE,700-12-12T | ﾁｭｰﾌﾞ | 2 | |
| 3 | 06701-70012 | | FLAP,700-12-12F | ﾌﾗｯﾌﾟ | 2 | |
| A2 | 23454-40501 | | RIM-ASSY,500S-12 | ﾘﾑｱｯｾﾝ | 2 | INC.4-8 |
| 4 | NO PART NO. | # | RIM,INSIDE | ﾘﾑ | 2 | |
| 5 | NO PART NO. | # | RIM,OUTSIDE | ﾘﾑ | 2 | |
| 6 | 514A3-82601 | | BOLT | ﾎﾞﾙﾄ | 12 | |
| 7 | 02011-00016 | | WASHER | ﾜｯｼｬ | 12 | |
| 8 | 01400-10016 | | NUT | ﾅｯﾄ | 12 | |

# FIG.104 FRONT WHEEL [DR F]

(F7024440) フロントホイール

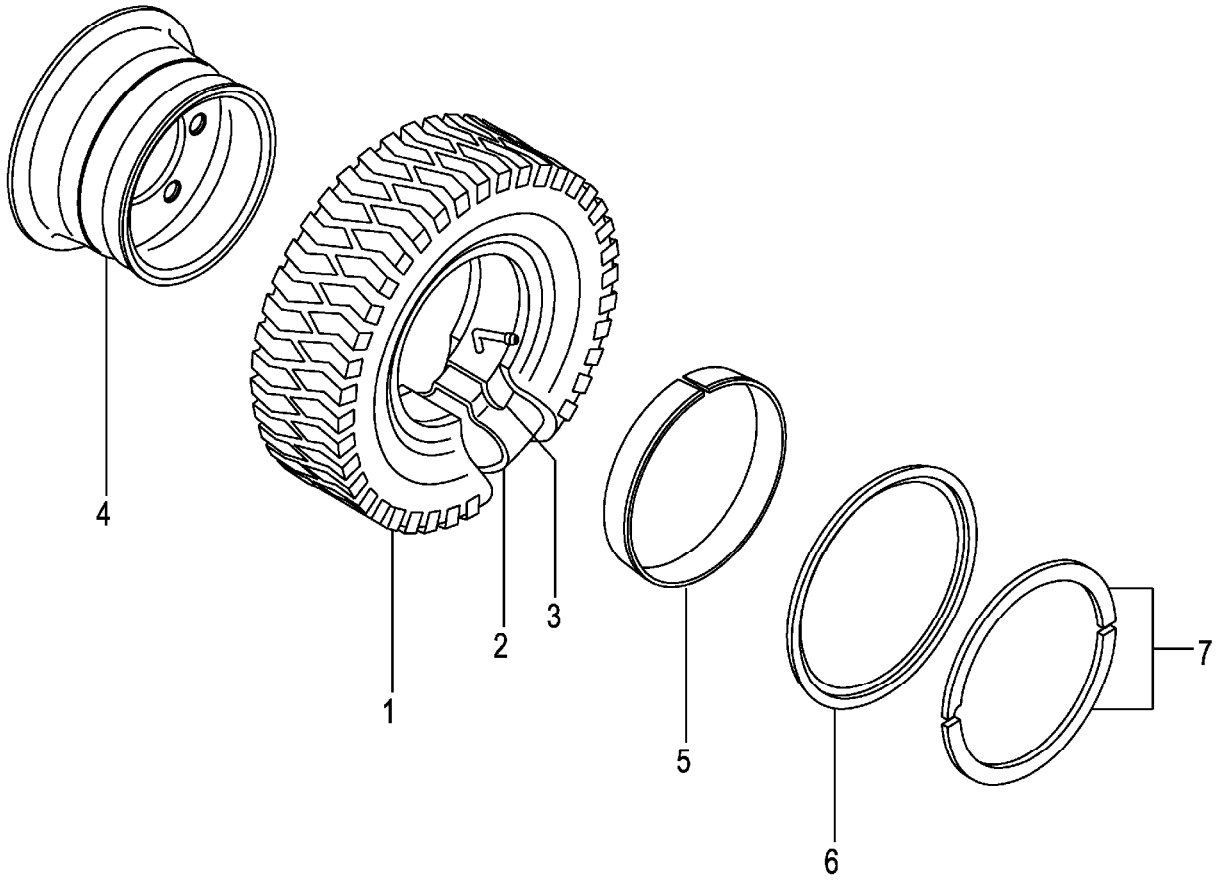

A:FG20C13 FG20T13 FG25C13 FG25T13 C:FD20C13 FD20T13 FD25C13 FD25T13 (F7024440)
B:FG20C3 FG20T3 FG25C3 FG25T3 FG20W3 FG25W3 D:FD20C3 FD20T3 FD25C3 FD25T3 FD20W3 FD25W3

| Item No | Part No. | Mark | Description | | Req'd | Remarks : Serial No. |
|---|---|---|---|---|---|---|
| A1 | 53666-80601 | | WHEEL-ASSY,FRONT | ﾌﾛﾝﾄﾎｲｰﾙｱｯｾﾝ | 2 | [DR F] INC.1-7 |
| 1 | 06006-70012 | | TIRE,700-12-12 | ﾀｲﾔ | 2 | [DR F] |
| 2 | 06711-70012 | | TUBE,700-12-12T | ﾁｭｰﾌﾞ | 2 | [DR F] |
| 3 | 06701-70012 | | FLAP,700-12-12F | ﾌﾗｯﾌﾟ | 2 | [DR F] |
| A2 | 53666-81801 | | RIM-ASSY,500S-12 | ﾘﾑｱｯｾﾝ | 2 | [DR F] INC.4-7 |
| 4 | NO PART NO. | # | RIM | ﾘﾑ | 2 | [DR F] |
| 5 | 53656-82041 | | BAND | ﾊﾞﾝﾄﾞ | 2 | [DR F] |
| 6 | 53656-82051 | | FLANGE,SIDE | ﾌﾗﾝｼﾞ | 2 | [DR F] |
| 7 | 53656-82061 | | RING,LOCK | ﾘﾝｸﾞ | 2 | [DR F] |

# FIG.105 FRONT WHEEL [TJ F][TJSF][T F][TS F]

(F7024450) フロントホイール

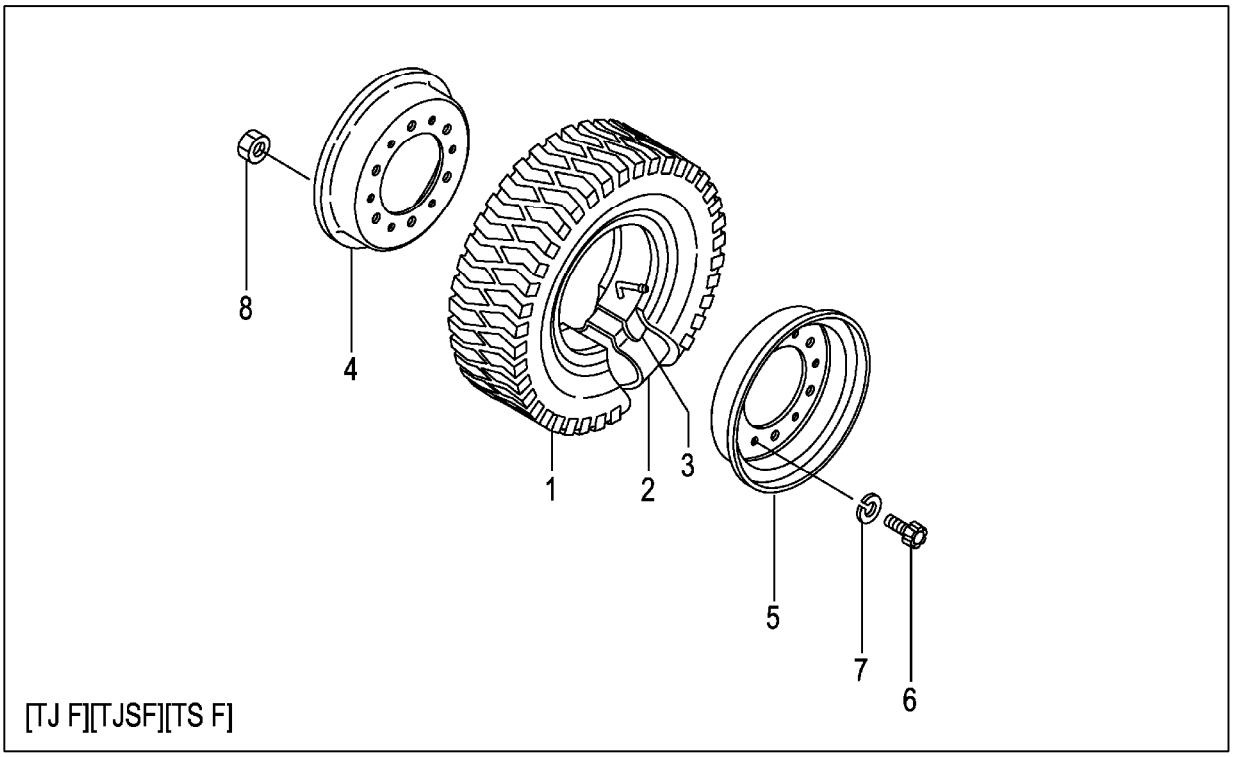


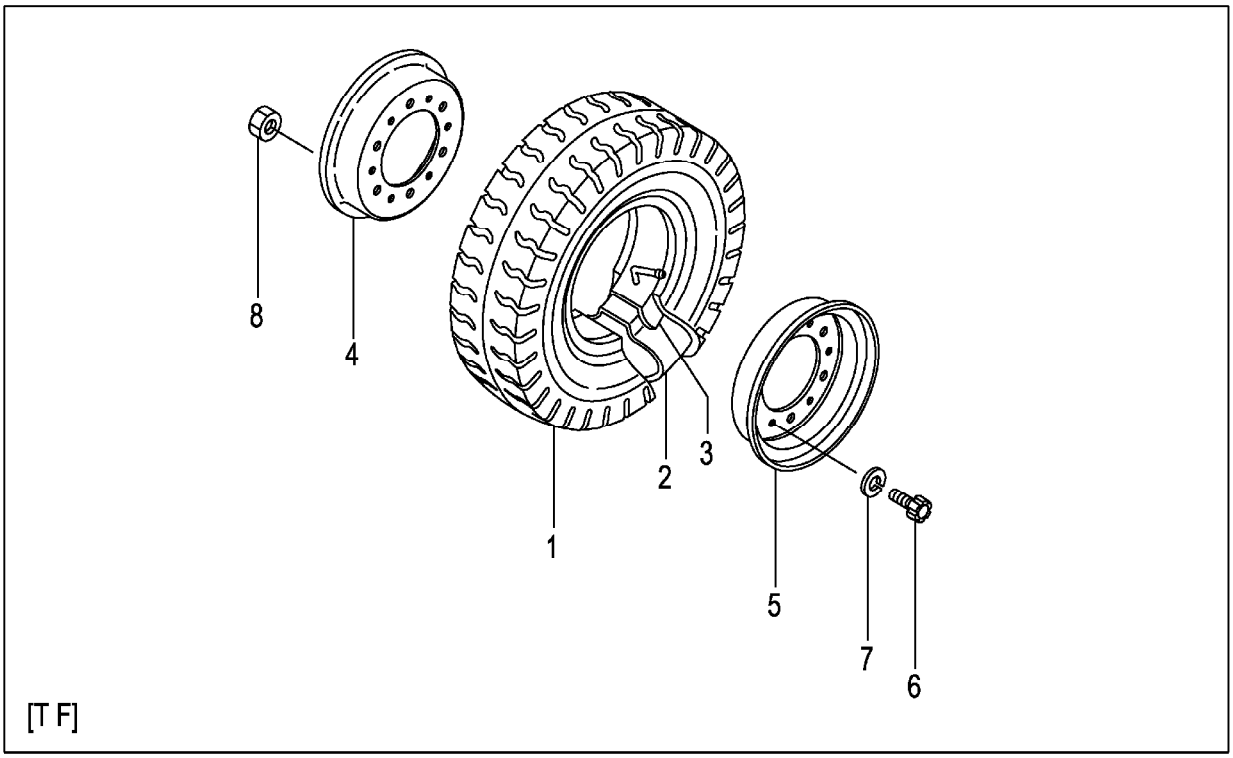

A:FG20C13 FG20T13 FG25C13 FG25T13 C:FD20C13 FD20T13 FD25C13 FD25T13 (F7024450)
B:FG20C3 FG20T3 FG25C3 FG25T3 FG20W3 FG25W3 D:FD20C3 FD20T3 FD25C3 FD25T3 FD20W3 FD25W3

| Item No | Part No. | Mark | Description | | Req'd | Remarks : Serial No. |
|---|---|---|---|---|---|---|
| A1 | 53456-80902 | | WHEEL-ASSY,FRONT | ﾌﾛﾝﾄﾎｲｰﾙｱｯｾﾝ | 2 | [TJ F] INC.1-8 |
| - | 53456-80702 | | WHEEL-ASSY,FRONT | ﾌﾛﾝﾄﾎｲｰﾙｱｯｾﾝ | 2 | [TJSF] INC.1-8 |
| - | 23454-40601 | | WHEEL-ASSY,FRONT | ﾌﾛﾝﾄﾎｲｰﾙｱｯｾﾝ | 2 | [T F] INC.1-8 |
| - | 53456-80502 | | WHEEL-ASSY,FRONT | ﾌﾛﾝﾄﾎｲｰﾙｱｯｾﾝ | 2 | [TS F] INC.1-8 |
| 1 | 06006-70012 | | TIRE,700-12-12 | ﾀｲﾔ | 2 | [TJ F] |
| - | 06005-70012 | | TIRE,700-12-12 | ﾀｲﾔ | 2 | [TJSF] |
| - | 06001-70012 | | TIRE,700-12-12 | ﾀｲﾔ | 2 | [T F] |
| - | 06007-70012 | | TIRE,700-12-12 | ﾀｲﾔ | 2 | [TS F] |
| 2 | 06711-70012 | | TUBE,700-12-12T | ﾁｭｰﾌﾞ | 2 | [TJ F][TJSF][T F][TS F] |
| 3 | 06701-70012 | | FLAP,700-12-12F | ﾌﾗｯﾌﾟ | 2 | [TJ F][TJSF][T F][TS F] |
| A2 | 23454-40501 | | RIM-ASSY,500S-12 | ﾘﾑｱｯｾﾝ | 2 | [TJ F][TJSF][T F][TS F] INC.4-8 |
| 4 | NO PART NO. | # | RIM,INSIDE | ﾘﾑ | 2 | [TJ F][TJSF][T F][TS F] |
| 5 | NO PART NO. | # | RIM,OUTSIDE | ﾘﾑ | 2 | [TJ F][TJSF][T F][TS F] |
| 6 | 514A3-82601 | | BOLT | ﾎﾞﾙﾄ | 12 | [TJ F][TJSF][T F][TS F] |
| 7 | 02011-00016 | | WASHER | ﾜｯｼｬ | 12 | [TJ F][TJSF][T F][TS F] |
| 8 | 01400-10016 | | NUT | ﾅｯﾄ | 12 | [TJ F][TJSF][T F][TS F] |

# FIG.106 FRONT WHEEL [(TJ F,TJSF,T F,TS F)/DR F]

(F7024460) フロントホイール

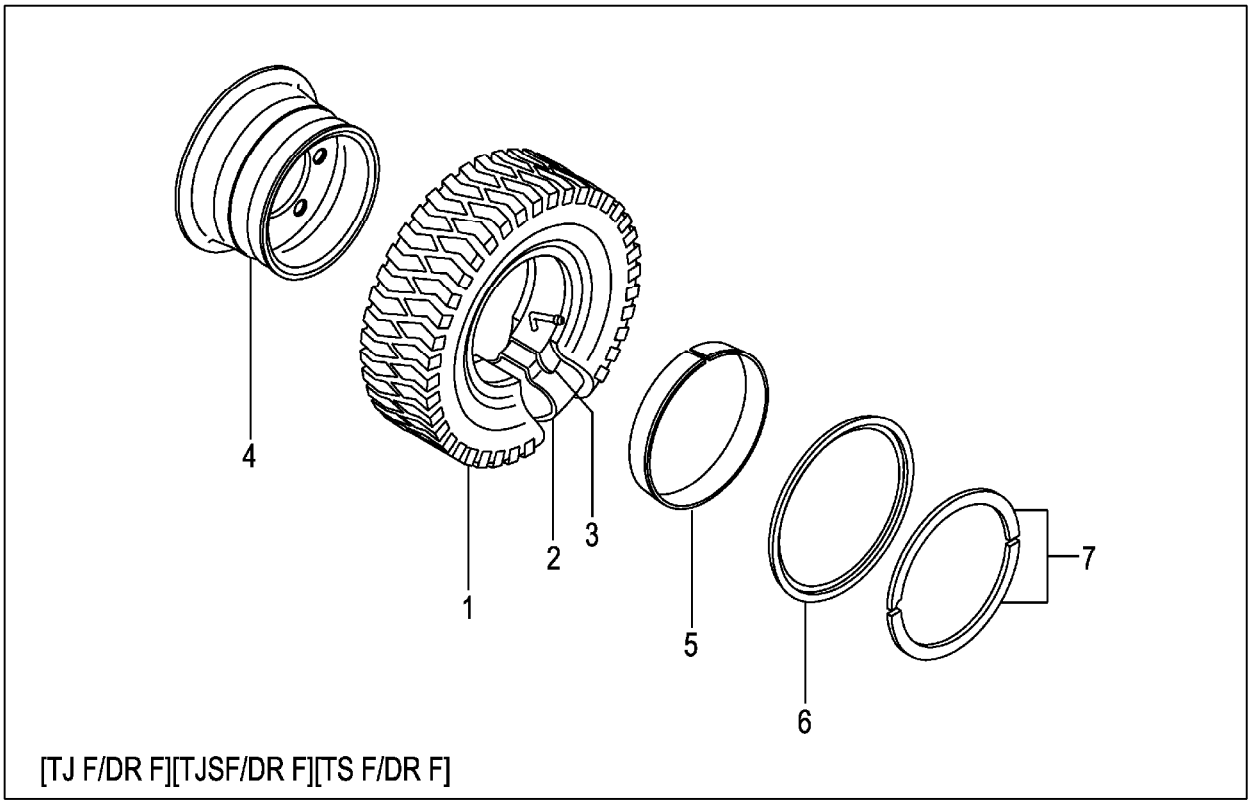


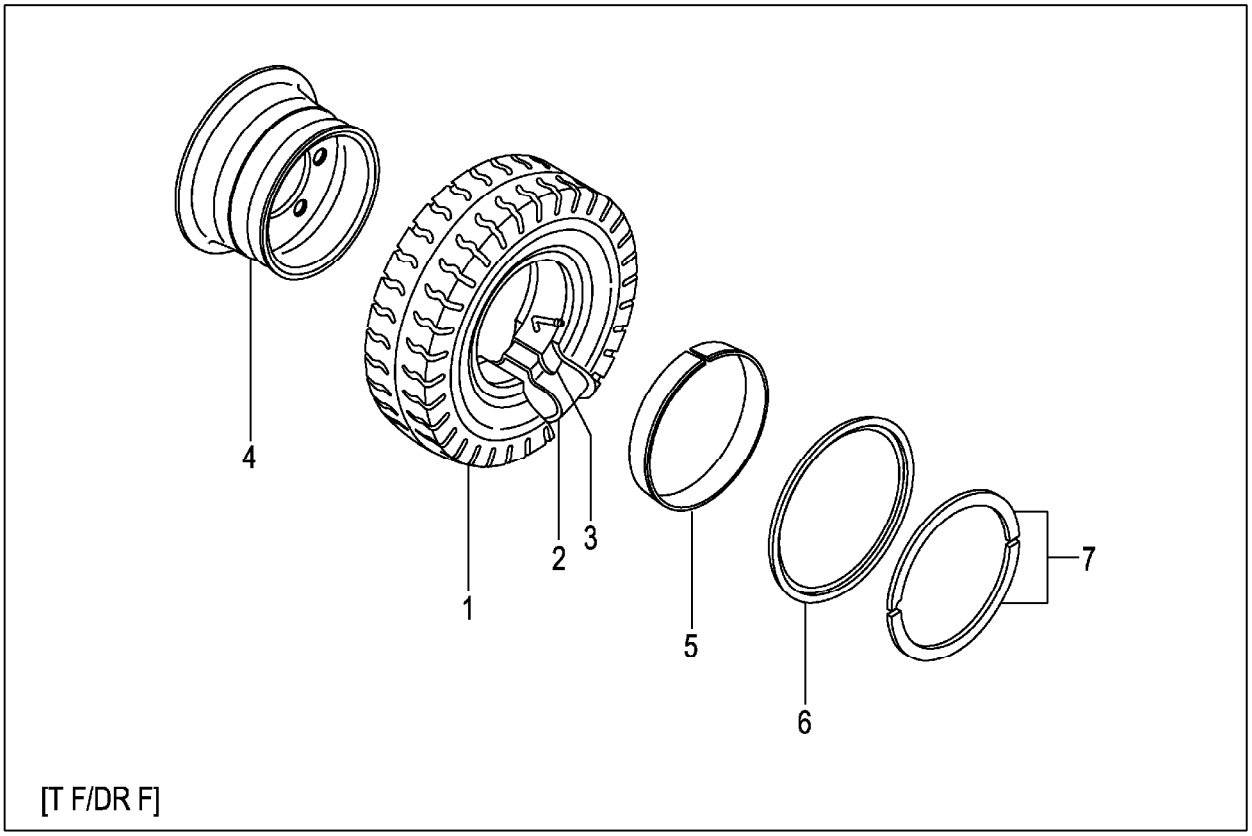

A:FG20C13 FG20T13 FG25C13 FG25T13 C:FD20C13 FD20T13 FD25C13 FD25T13 (F7024460)
B:FG20C3 FG20T3 FG25C3 FG25T3 FG20W3 FG25W3 D:FD20C3 FD20T3 FD25C3 FD25T3 FD20W3 FD25W3

| Item No | Part No. | Mark | Description | | Req'd | Remarks : Serial No. |
|---|---|---|---|---|---|---|
| A1 | 53666-80601 | | WHEEL-ASSY,FRONT | ﾌﾛﾝﾄﾎｲｰﾙｱｯｾﾝ | 2 | [TJ F/DR F] INC.1-7 |
| - | 53666-80501 | | WHEEL-ASSY,FRONT | ﾌﾛﾝﾄﾎｲｰﾙｱｯｾﾝ | 2 | [TJSF/DR F] INC.1-7 |
| - | 53666-80201 | | WHEEL-ASSY,FRONT | ﾌﾛﾝﾄﾎｲｰﾙｱｯｾﾝ | 2 | [T F/DR F] INC.1-7 |
| - | 53666-80701 | | WHEEL-ASSY,FRONT | ﾌﾛﾝﾄﾎｲｰﾙｱｯｾﾝ | 2 | [TS F/DR F] INC.1-7 |
| 1 | 06006-70012 | | TIRE,700-12-12 | ﾀｲﾔ | 2 | [TJ F/DR F] |
| - | 06005-70012 | | TIRE,700-12-12 | ﾀｲﾔ | 2 | [TJSF/DR F] |
| - | 06001-70012 | | TIRE,700-12-12 | ﾀｲﾔ | 2 | [T F/DR F] |
| - | 06007-70012 | | TIRE,700-12-12 | ﾀｲﾔ | 2 | [TS F/DR F] |
| 2 | 06711-70012 | | TUBE,700-12-12T | ﾁｭｰﾌﾞ | 2 | [TJ F/DR F][TJSF/DR F] |
| | | | | | | [T F/DR F][TS F/DR F] |
| 3 | 06701-70012 | | FLAP,700-12-12F | ﾌﾗｯﾌﾟ | 2 | [TJ F/DR F][TJSF/DR F] |
| | | | | | | [T F/DR F][TS F/DR F] |
| A2 | 53666-81801 | | RIM-ASSY,500S-12 | ﾘﾑｱｯｾﾝ | 2 | [TJ F/DR F][T F/DR F] INC.4-7 |
| - | 53666-81801 | | RIM-ASSY,500S-12 | ﾘﾑｱｯｾﾝ | 2 | [TJSF/DR F][TS F/DR F] INC.4-7 |
| 4 | NO PART NO. | # | RIM | ﾘﾑ | 2 | [TJ F/DR F][TJSF/DR F] |
| | | | | | | [T F/DR F][TS F/DR F] |
| 5 | 53656-82041 | | BAND | ﾊﾞﾝﾄﾞ | 2 | [TJ F/DR F][TJSF/DR F] |
| | | | | | | [T F/DR F][TS F/DR F] |
| 6 | 53656-82051 | | FLANGE,SIDE | ﾌﾗﾝｼﾞ | 2 | [TJ F/DR F][TJSF/DR F] |
| | | | | | | [T F/DR F][TS F/DR F] |
| 7 | 53656-82061 | | RING,LOCK | ﾘﾝｸﾞ | 2 | [TJ F/DR F][TJSF/DR F] |
| | | | | | | [T F/DR F][TS F/DR F] |

# FIG.107 FRONT WHEEL [TSUF][TUJF][TUSF][TUWF][TUGF]

(F7024470) フロントホイール

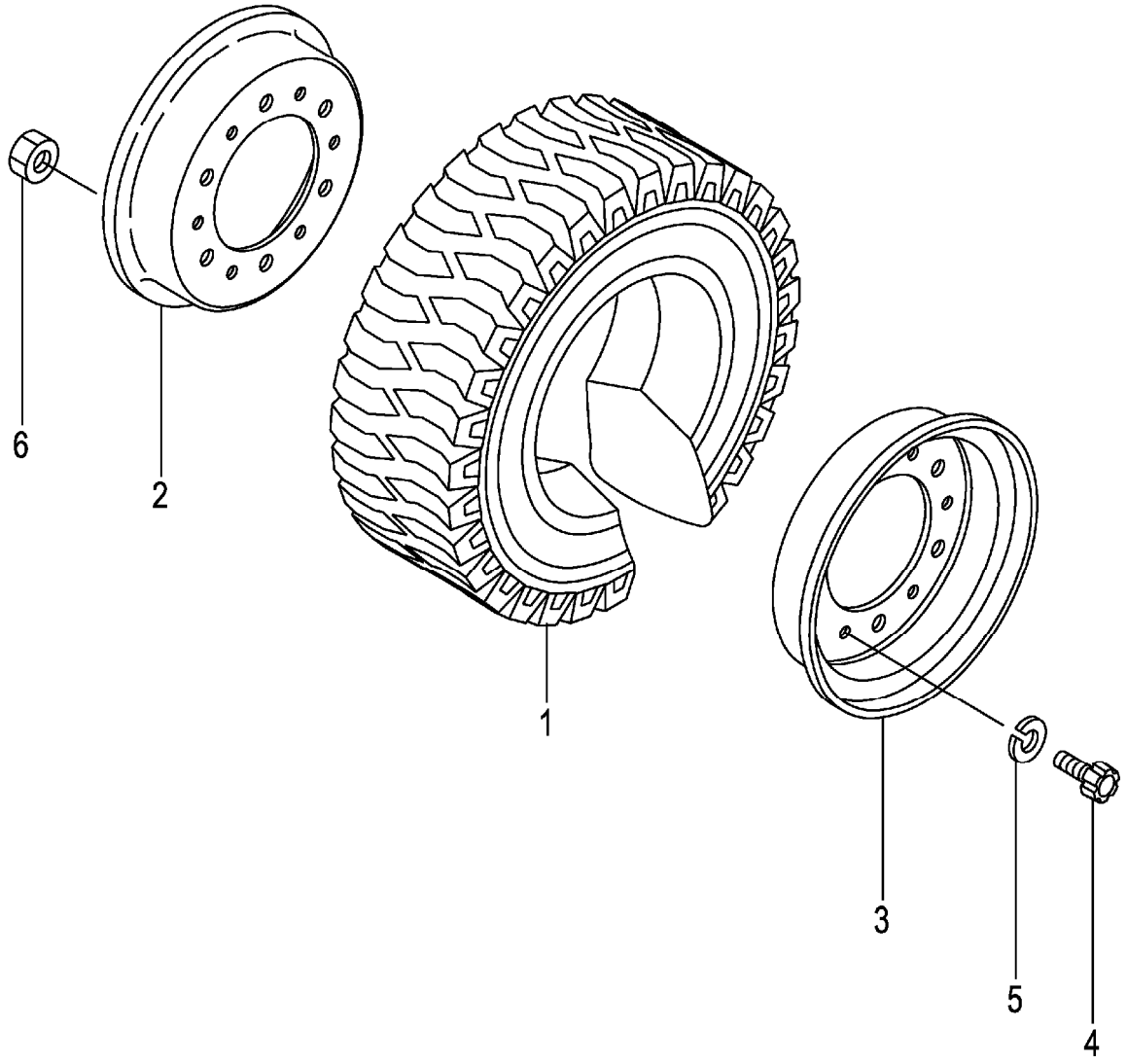

A:FG20C13 FG20T13 FG25C13 FG25T13 D:FD20C13 FD20T13 FD25C13 FD25T13
B:FG20C3 FG20T3 FG25C3 FG25T3 E:FD20C3 FD20T3 FD25C3 FD25T3
C:FG20W3 FG25W3 F:FD20W3 FD25W3

**FIG.107**
(F7024470)

| Item No | Part No. | Mark | Description | | Req'd | Remarks : Serial No. |
|---|---|---|---|---|---|---|
| A1 | 539A6-80201 | | WHEEL-ASSY,FRONT | ﾌﾛﾝﾄﾎｲｰﾙｱｯｾﾝ | 2 | [TSUF] INC.1-6 |
| - | 52676-80601 | | WHEEL-ASSY,FRONT | ﾌﾛﾝﾄﾎｲｰﾙｱｯｾﾝ | 2 | [TUJF] INC.1-6 |
| - | 52676-80601 | | WHEEL-ASSY,FRONT | ﾌﾛﾝﾄﾎｲｰﾙｱｯｾﾝ | 2 | [TUJF] INC.1-6 |
| - | 522A3-80401 | | WHEEL-ASSY,FRONT | ﾌﾛﾝﾄﾎｲｰﾙｱｯｾﾝ | 2 | [TUJF] INC.1-6 |
| - | 522A3-80401 | | WHEEL-ASSY,FRONT | ﾌﾛﾝﾄﾎｲｰﾙｱｯｾﾝ | 2 | B,E<br>[TUJF/EX] INC.1-6 |
| - | 522A6-80221 | | WHEEL-ASSY,FRONT | ﾌﾛﾝﾄﾎｲｰﾙｱｯｾﾝ | 2 | [TUSF] INC.1-6 |
| - | 522A6-80201 | | WHEEL-ASSY,FRONT | ﾌﾛﾝﾄﾎｲｰﾙｱｯｾﾝ | 2 | [TUWF] INC.1-6 |
| - | 522A6-80211 | | WHEEL-ASSY,FRONT | ﾌﾛﾝﾄﾎｲｰﾙｱｯｾﾝ | 2 | [TUGF] INC.1-6 |
| 1 | 06807-70012 | | TIRE,UNIQUE,700-12 | ﾀｲﾔ | 2 | [TSUF] |
| - | 06806-70012 | | TIRE,UNIQUE,700-12 | ﾀｲﾔ | 2 | [TUJF] |
| - | 06806-70012 | | TIRE,UNIQUE,700-12 | ﾀｲﾔ | 2 | [TUJF] |
| - | 06807-70012 | | TIRE,UNIQUE,700-12 | ﾀｲﾔ | 2 | [TUJF] |
| - | 06807-70012 | | TIRE,UNIQUE,700-12 | ﾀｲﾔ | 2 | B,E<br>[TUJF/EX] |
| - | 06851-70012 | | TIRE,SOFTONE,700-12 | ﾀｲﾔ | 2 | [TUSF] |
| - | 06841-70012 | | TIRE,WHITE,700-12 | ﾀｲﾔ | 2 | [TUWF] |
| - | 06843-70012 | | TIRE,GREEN,700-12 | ﾀｲﾔ | 2 | [TUGF] |
| A2 | 23454-40501 | | RIM-ASSY,500S-12 | ﾘﾑｱｯｾﾝ | 2 | [TSUF][TUJF][TUSF][TUWF]<br>[TUGF] INC.2-6 |
| 2 | NO PART NO. | # | RIM,INSIDE | ﾘﾑ | 2 | [TSUF][TUJF][TUSF][TUWF]<br>[TUGF] |
| 3 | NO PART NO. | # | RIM,OUTSIDE | ﾘﾑ | 2 | [TSUF][TUJF][TUSF][TUWF]<br>[TUGF] |
| 4 | 514A3-82601 | | BOLT | ﾎﾞﾙﾄ | 12 | [TSUF][TUJF][TUSF][TUWF]<br>[TUGF] |
| 5 | 02011-00016 | | WASHER | ﾜｯｼｬ | 12 | [TSUF][TUJF][TUSF][TUWF]<br>[TUGF] |
| 6 | 01400-10016 | | NUT | ﾅｯﾄ | 12 | [TSUF][TUJF][TUSF][TUWF]<br>[TUGF] |

# FIG.108 FRONT WHEEL [TUJF/DR F]

(F7024480) フロントホイール

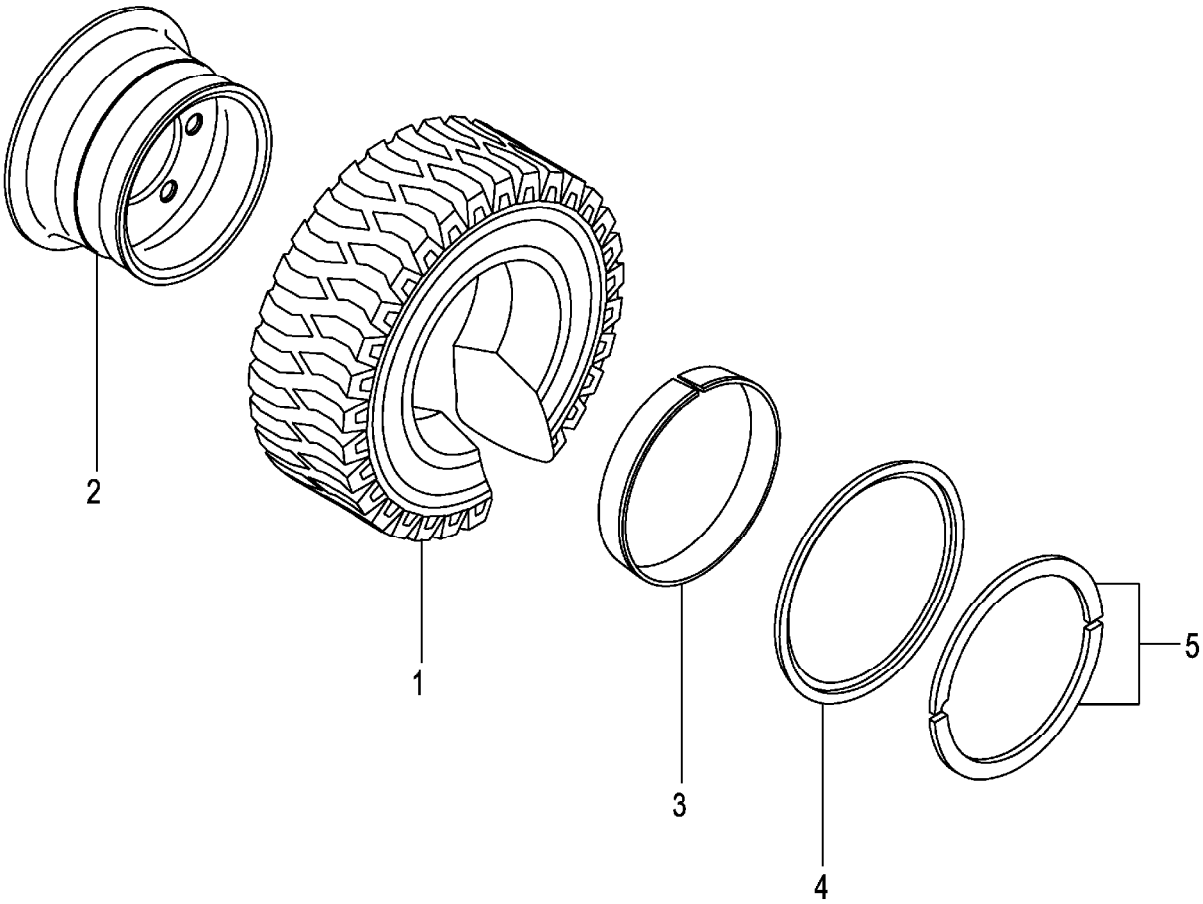

A:FG20C13 FG20T13 FG25C13 FG25T13 C:FD20C13 FD20T13 FD25C13 FD25T13 (F7024480)
B:FG20C3 FG20T3 FG25C3 FG25T3 FG20W3 FG25W3 D:FD20C3 FD20T3 FD25C3 FD25T3 FD20W3 FD25W3

| Item No | Part No. | Mark | Description | | Req'd | Remarks : Serial No. |
|---|---|---|---|---|---|---|
| A1 | 53666-80401 | | WHEEL-ASSY,FRONT | ﾌﾛﾝﾄﾎｲｰﾙｱｯｾﾝ | 2 | [TUJF/DR F] INC.1-5 |
| 1 | 06806-70012 | | TIRE,UNIQUE,700-12 | ﾀｲﾔ | 2 | [TUJF/DR F] |
| A2 | 53666-81801 | | RIM-ASSY,500S-12 | ﾘﾑｱｯｾﾝ | 2 | [TUJF/DR F] INC.2-5 |
| 2 | NO PART NO. | # | RIM | ﾘﾑ | 2 | [TUJF/DR F] |
| 3 | 53656-82041 | | BAND | ﾊﾞﾝﾄﾞ | 2 | [TUJF/DR F] |
| 4 | 53656-82051 | | FLANGE,SIDE | ﾌﾗﾝｼﾞ | 2 | [TUJF/DR F] |
| 5 | 53656-82061 | | RING,LOCK | ﾘﾝｸﾞ | 2 | [TUJF/DR F] |

# FIG.109 FRONT WHEEL [TRAF]

(F7024490) フロントホイール

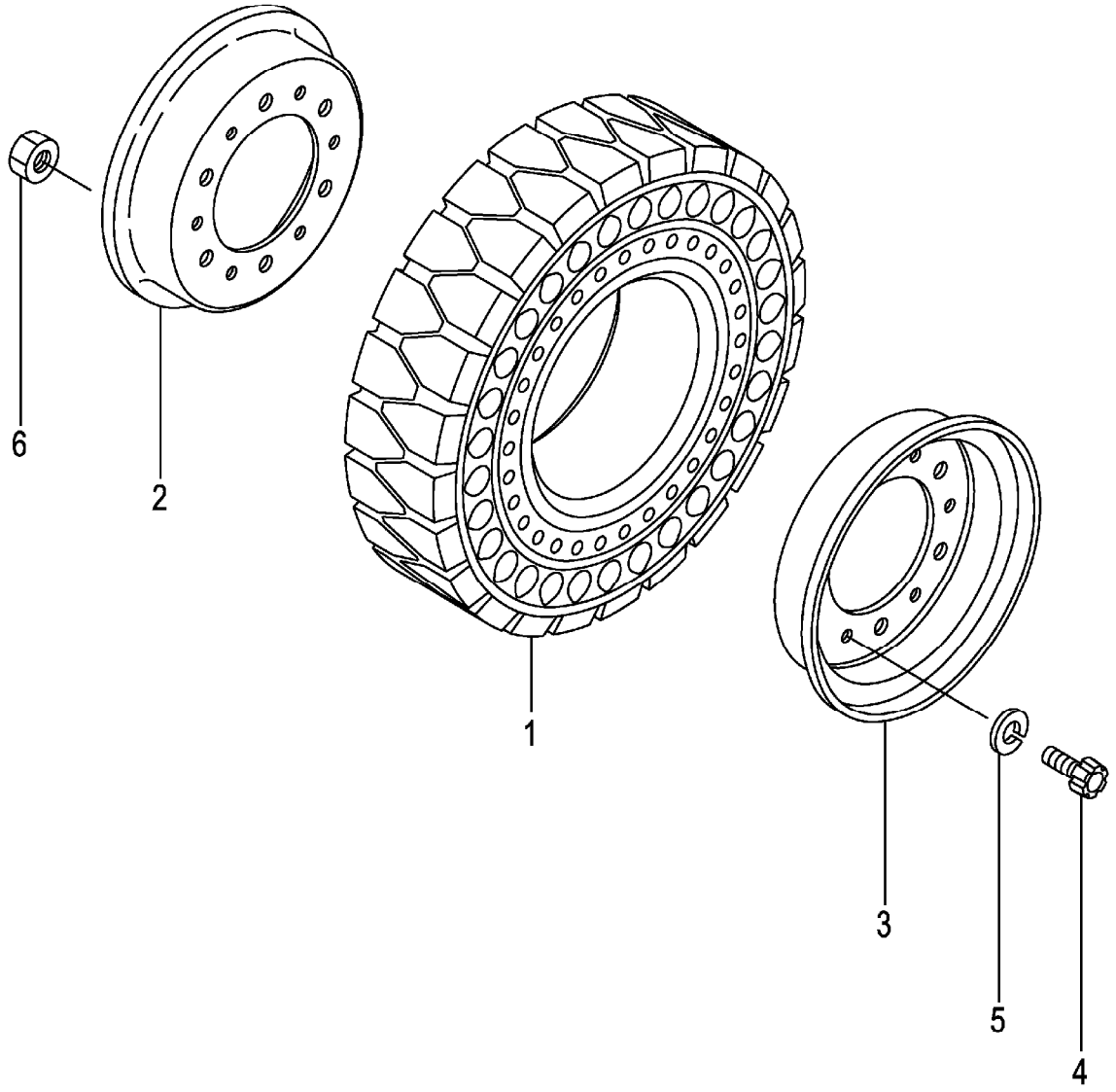

A:FG20C13 FG20T13 FG25C13 FG25T13 C:FD20C13 FD20T13 FD25C13 FD25T13 (F7024490)
B:FG20C3 FG20T3 FG25C3 FG25T3 FG20W3 FG25W3 D:FD20C3 FD20T3 FD25C3 FD25T3 FD20W3 FD25W3

| Item No | Part No. | Mark | Description | | Req'd | Remarks : Serial No. |
|---|---|---|---|---|---|---|
| A1 | 534A6-80171 | | WHEEL-ASSY,FRONT | ﾌﾛﾝﾄﾎｲｰﾙｱｯｾﾝ | 2 | [TRAF] INC.1-6 |
| 1 | 534A6-85011 | | TIRE,AIR-BOSS,700-12 | ﾀｲﾔ | 2 | [TRAF] |
| A2 | 23454-40501 | | RIM-ASSY,500S-12 | ﾘﾑｱｯｾﾝ | 2 | [TRAF] INC.2-6 |
| 2 | NO PART NO. | # | RIM,INSIDE | ﾘﾑ | 2 | [TRAF] |
| 3 | NO PART NO. | # | RIM,OUTSIDE | ﾘﾑ | 2 | [TRAF] |
| 4 | 514A3-82601 | | BOLT | ﾎﾞﾙﾄ | 12 | [TRAF] |
| 5 | 02011-00016 | | WASHER | ﾜｯｼｬ | 12 | [TRAF] |
| 6 | 01400-10016 | | NUT | ﾅｯﾄ | 12 | [TRAF] |

# FIG.110 FRONT WHEEL [TUJSF]

(F70244A0) フロントホイール

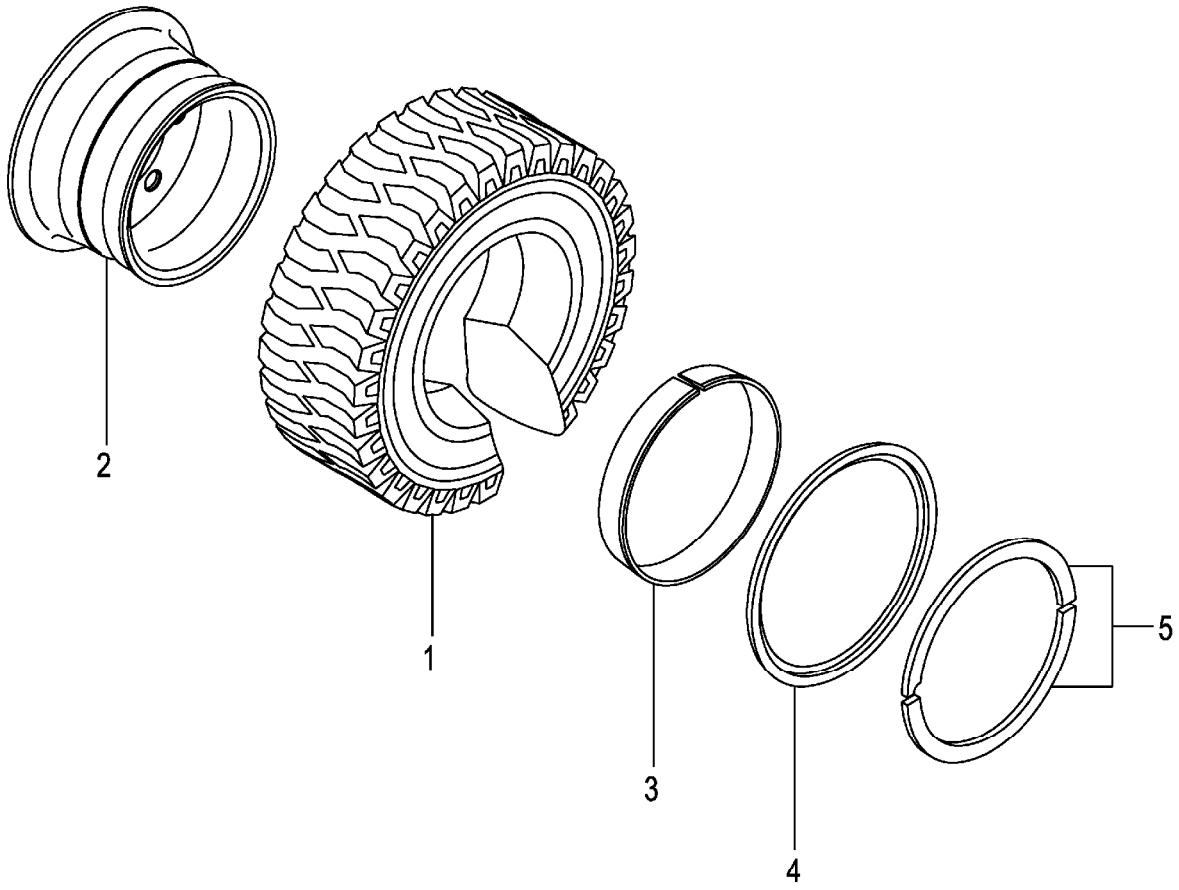

A:FG20C13 FG20T13 FG25C13 FG25T13 C:FD20C13 FD20T13 FD25C13 FD25T13 (F70244A0)
B:FG20C3 FG20T3 FG25C3 FG25T3 FG20W3 FG25W3 D:FD20C3 FD20T3 FD25C3 FD25T3 FD20W3 FD25W3

| Item No | Part No. | Mark | Description | | Req'd | Remarks : Serial No. |
|---|---|---|---|---|---|---|
| A1 | 62156-52501 | | WHEEL-ASSY,FRONT | ﾌﾛﾝﾄﾎｲｰﾙｱｯｾﾝ | 2 | [TUJSF] INC.1-5 |
| 1 | 06804-70012 | | TIRE,UNIQUE,700-12 | ﾀｲﾔ | 2 | [TUJSF] |
| A2 | 22854-40201 | | RIM-ASSY,500S-12 | ﾘﾑｱｯｾﾝ | 2 | [TUJSF] INC.2-5 |
| 2 | NO PART NO. | # | RIM | ﾘﾑ | 2 | [TUJSF] |
| 3 | 53656-82041 | | BAND | ﾊﾞﾝﾄﾞ | 2 | [TUJSF] |
| 4 | 53656-82051 | | FLANGE,SIDE | ﾌﾗﾝｼﾞ | 2 | [TUJSF] |
| 5 | 53656-82061 | | RING,LOCK | ﾘﾝｸﾞ | 2 | [TUJSF] |

# FIG.111 FRONT WHEEL [TJ W][TJSW][T W][TS W]

(F70244B0) フロントホイール

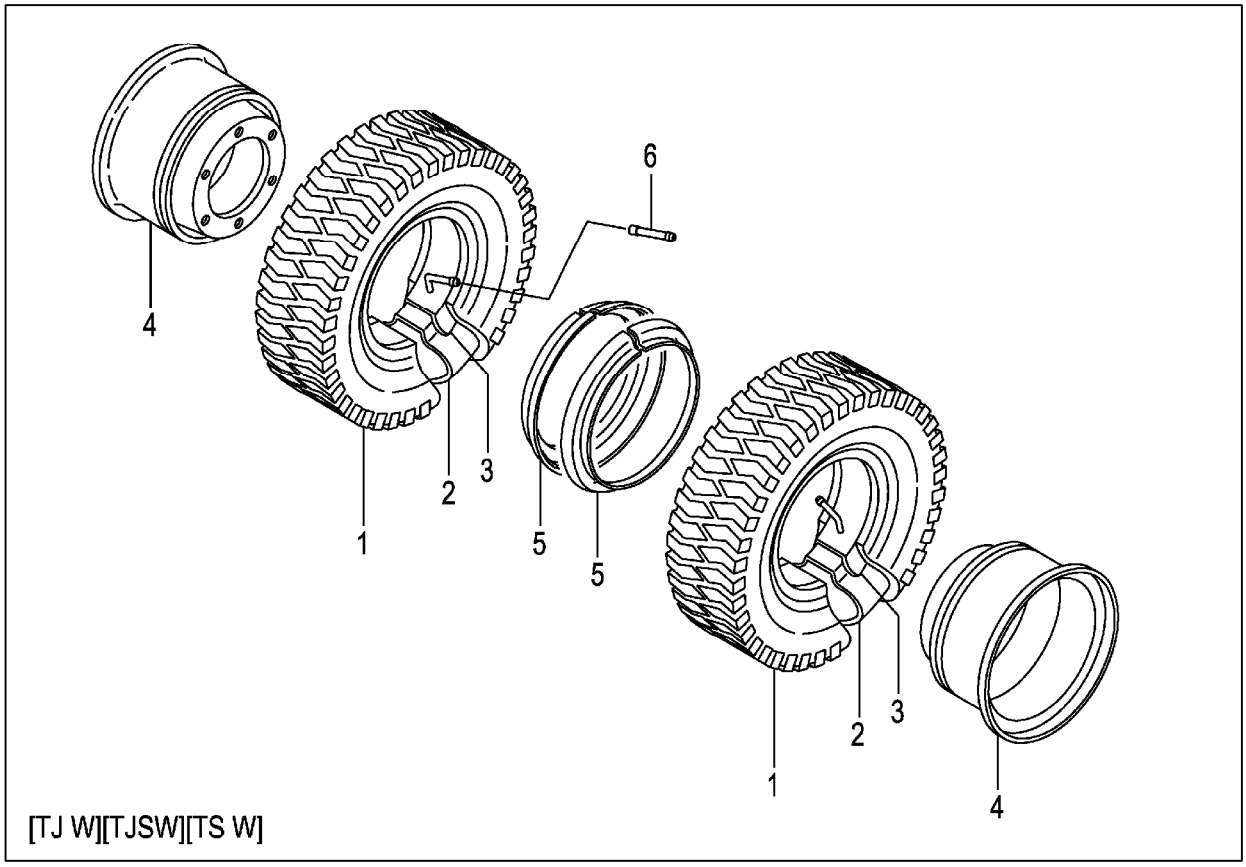


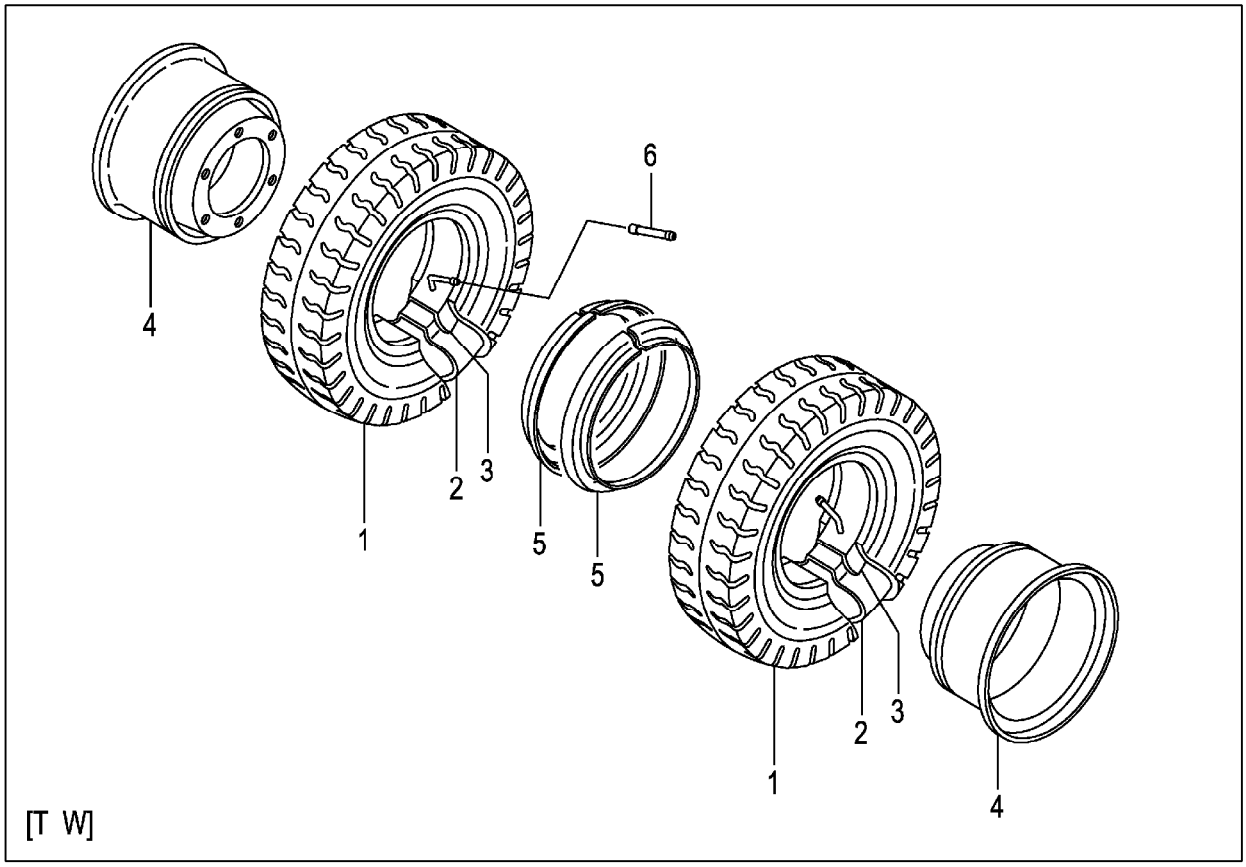

A:FG20C13 FG20T13 FG25C13 FG25T13 C:FD20C13 FD20T13 FD25C13 FD25T13 (F70244B0)
B:FG20C3 FG20T3 FG25C3 FG25T3 FG20W3 FG25W3 D:FD20C3 FD20T3 FD25C3 FD25T3 FD20W3 FD25W3

| Item No | Part No. | Mark | Description | | Req'd | Remarks : Serial No. |
|---|---|---|---|---|---|---|
| A1 | 52676-80402 | | WHEEL-ASSY,FRONT | ﾌﾛﾝﾄﾎｲｰﾙｱｯｾﾝ | 4 | [TJ W] INC.1-5 |
| - | 52676-80202 | | WHEEL-ASSY,FRONT | ﾌﾛﾝﾄﾎｲｰﾙｱｯｾﾝ | 4 | [TJSW] INC.1-5 |
| - | 53457-40003 | | WHEEL-ASSY,FRONT | ﾌﾛﾝﾄﾎｲｰﾙｱｯｾﾝ | 4 | [T W] INC.1-5 |
| - | 52676-80302 | | WHEEL-ASSY,FRONT | ﾌﾛﾝﾄﾎｲｰﾙｱｯｾﾝ | 4 | [TS W] INC.1-5 |
| 1 | 06006-55015 | | TIRE,550-15-8 | ﾀｲﾔ | 4 | [TJ W] |
| - | 06005-55015 | | TIRE,550-15-8 | ﾀｲﾔ | 4 | [TJSW] |
| - | 06001-55015 | | TIRE,550-15-8 | ﾀｲﾔ | 4 | [T W] |
| - | 06007-55015 | | TIRE,550-15-8 | ﾀｲﾔ | 4 | [TS W] |
| 2 | 06711-55015 | | TUBE,550-15-8T | ﾁｭｰﾌﾞ | 4 | [TJ W][TJSW][T W][TS W] |
| 3 | 06701-55015 | | FLAP,550-15-8F | ﾌﾗｯﾌﾟ | 4 | [TJ W][TJSW][T W][TS W] |
| A2 | 53657-42053 | | RIM-ASSY,450E-15 | ﾘﾑｱｯｾﾝ | 4 | [TJ W][TJSW][T W][TS W] INC.4,5 |
| 4 | NO PART NO. | # | RIM & DISK | ﾘﾑ & ﾃﾞｨｽｸ | 4 | [TJ W][TJSW][T W][TS W] |
| 5 | 53457-42151 | | RING,SIDE | ﾘﾝｸﾞ | 4 | [TJ W][TJSW][T W][TS W] |
| 6 | 06731-00120 | | TUBE,EXTENSION | ﾁｭｰﾌﾞ | 2 | [TJ W][TJSW][T W][TS W] |

# FIG.112 FRONT WHEEL [TUJW][TUSW][TUWW][TUGW]

(F70244C0) フロントホイール

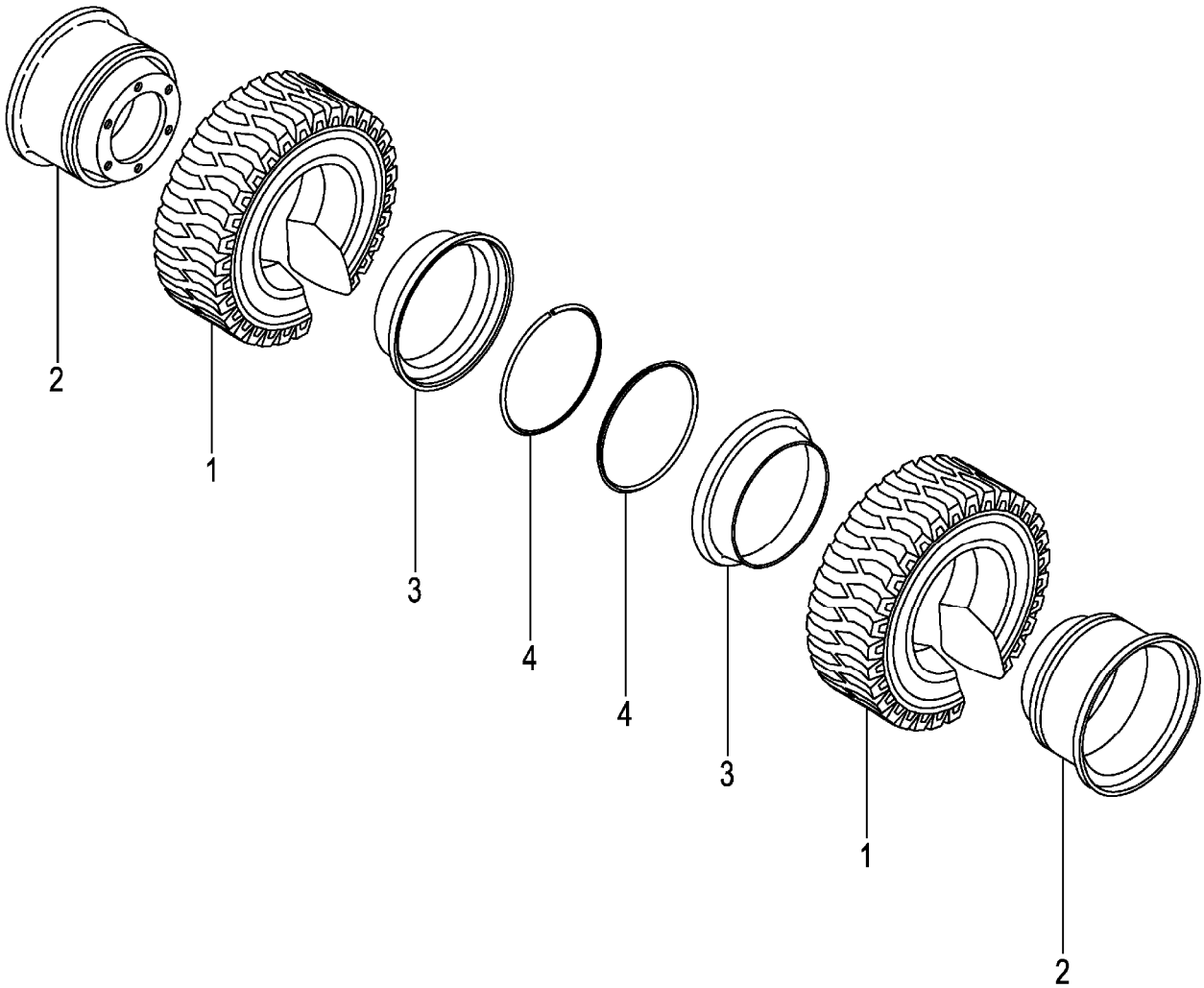

A:FG20C13 FG20T13 FG25C13 FG25T13 C:FD20C13 FD20T13 FD25C13 FD25T13 (F70244C0)
B:FG20C3 FG20T3 FG25C3 FG25T3 FG20W3 FG25W3 D:FD20C3 FD20T3 FD25C3 FD25T3 FD20W3 FD25W3

| Item No | Part No. | Mark | Description | | Req'd | Remarks : Serial No. |
|---|---|---|---|---|---|---|
| A1 | 52676-80802 | | WHEEL-ASSY,FRONT | ﾌﾛﾝﾄﾎｲｰﾙｱｯｾﾝ | 4 | [TUJW] INC.1-4 |
| - | 522A6-80321 | | WHEEL-ASSY,FRONT | ﾌﾛﾝﾄﾎｲｰﾙｱｯｾﾝ | 4 | [TUSW] INC.1-4 |
| - | 522A6-80301 | | WHEEL-ASSY,FRONT | ﾌﾛﾝﾄﾎｲｰﾙｱｯｾﾝ | 4 | [TUWW] INC.1-4 |
| - | 522A6-80311 | | WHEEL-ASSY,FRONT | ﾌﾛﾝﾄﾎｲｰﾙｱｯｾﾝ | 4 | [TUGW] INC.1-4 |
| 1 | 06806-55015 | | TIRE,UNIQUE,550-15 | ﾀｲﾔ | 4 | [TUJW] |
| - | 06851-55015 | | TIRE,SOFTONE,550-15 | ﾀｲﾔ | 4 | [TUSW] |
| - | 06841-55015 | | TIRE,WHITE,550-15 | ﾀｲﾔ | 4 | [TUWW] |
| - | 06843-55015 | | TIRE,GREEN,550-15 | ﾀｲﾔ | 4 | [TUGW] |
| A2 | 53656-82001 | | RIM-ASSY,450E-15 | ﾘﾑｱｯｾﾝ | 4 | [TUJW][TUSW][TUWW][TUGW] INC.2-4 |
| 2 | NO PART NO. | # | RIM | ﾘﾑ | 4 | [TUJW][TUSW][TUWW][TUGW] |
| 3 | 53456-82052 | | RING,SIDE | ﾘﾝｸﾞ | 4 | [TUJW][TUSW][TUWW][TUGW] |
| 4 | 53456-82062 | | RING,LOCK | ﾘﾝｸﾞ | 4 | [TUJW][TUSW][TUWW][TUGW] |

# FIG.113 FRONT WHEEL [TJ W70][TJSW70][T W70][TS W70]

(F70244D0) フロントホイール

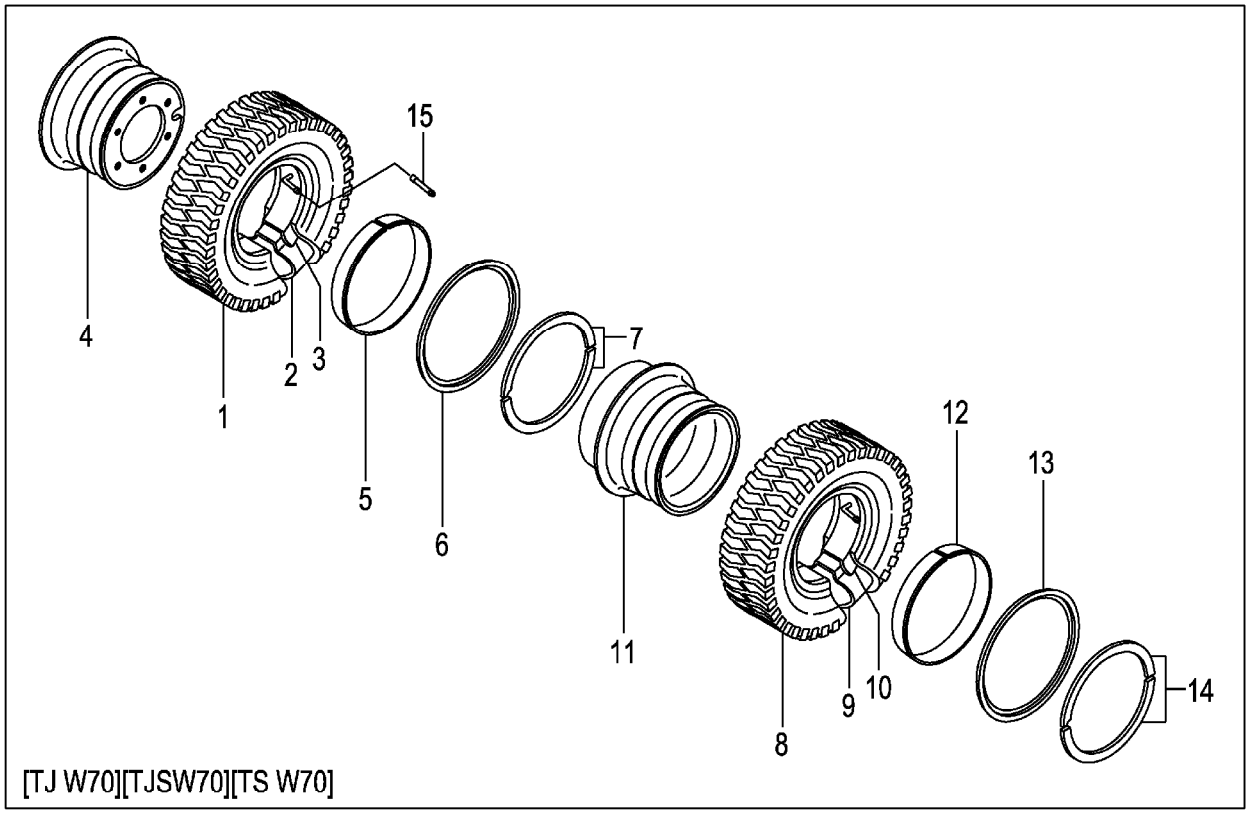


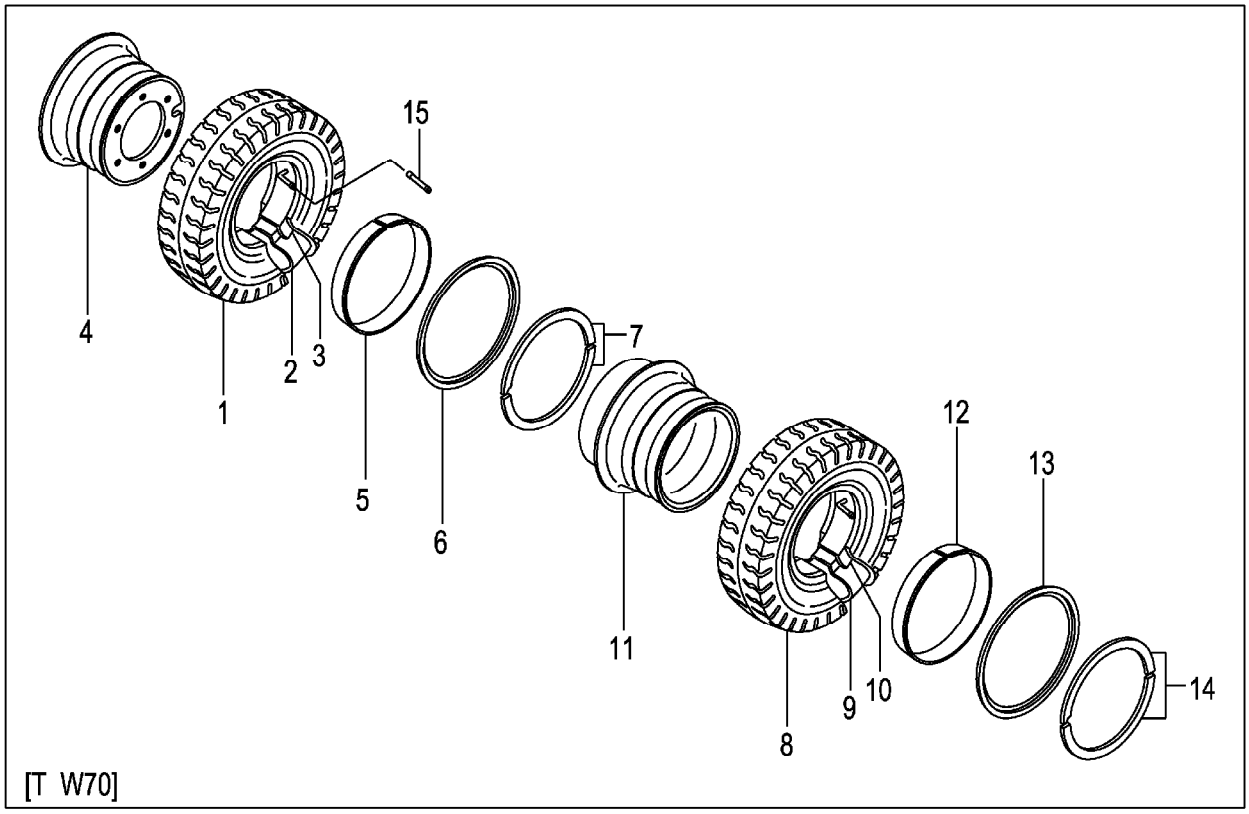

A:FG20C13 FG20T13 FG25C13 FG25T13 C:FD20C13 FD20T13 FD25C13 FD25T13 (F70244D0)
B:FG20C3 FG20T3 FG25C3 FG25T3 FG20W3 FG25W3 D:FD20C3 FD20T3 FD25C3 FD25T3 FD20W3 FD25W3

| Item No | Part No. | Mark | Description | | Req'd | Remarks : Serial No. |
|---|---|---|---|---|---|---|
| A1 | 53656-80601 | | WHEEL-ASSY,FRONT | ﾌﾛﾝﾄﾎｲｰﾙｱｯｾﾝ | 2 | [TJ W70] INC.1-7 |
| - | 53656-80501 | | WHEEL-ASSY,FRONT | ﾌﾛﾝﾄﾎｲｰﾙｱｯｾﾝ | 2 | [TJSW70] INC.1-7 |
| - | 53656-80201 | | WHEEL-ASSY,FRONT | ﾌﾛﾝﾄﾎｲｰﾙｱｯｾﾝ | 2 | [T W70] INC.1-7 |
| - | 53656-80701 | | WHEEL-ASSY,FRONT | ﾌﾛﾝﾄﾎｲｰﾙｱｯｾﾝ | 2 | [TS W70] INC.1-7 |
| 1 | 06006-70012 | | TIRE,700-12-12 | ﾀｲﾔ | 2 | [TJ W70] |
| - | 06005-70012 | | TIRE,700-12-12 | ﾀｲﾔ | 2 | [TJSW70] |
| - | 06001-70012 | | TIRE,700-12-12 | ﾀｲﾔ | 2 | [T W70] |
| - | 06007-70012 | | TIRE,700-12-12 | ﾀｲﾔ | 2 | [TS W70] |
| 2 | 06711-70012 | | TUBE,700-12-12T | ﾁｭｰﾌﾞ | 2 | [TJ W70][TJSW70][T W70] [TS W70] |
| 3 | 06701-70012 | | FLAP,700-12-12F | ﾌﾗｯﾌﾟ | 2 | [TJ W70][TJSW70][T W70] [TS W70] |
| A2 | 53656-80901 | | RIM-ASSY,500S-12TD | ﾘﾑｱｯｾﾝ | 2 | [TJ W70][TJSW70][T W70] [TS W70] INC.4-7 |
| 4 | NO PART NO. | # | RIM | ﾘﾑ | 2 | [TJ W70][TJSW70][T W70] [TS W70] |
| 5 | 53656-82041 | | BAND | ﾊﾞﾝﾄﾞ | 2 | [TJ W70][TJSW70][T W70] [TS W70] |
| 6 | 53656-82051 | | FLANGE,SIDE | ﾌﾗﾝｼﾞ | 2 | [TJ W70][TJSW70][T W70] [TS W70] |
| 7 | 53656-82061 | | RING,LOCK | ﾘﾝｸﾞ | 2 | [TJ W70][TJSW70][T W70] [TS W70] |
| A3 | 53656-80611 | | WHEEL-ASSY,FRONT | ﾌﾛﾝﾄﾎｲｰﾙｱｯｾﾝ | 2 | [TJ W70] INC.8-14 |
| - | 53656-80511 | | WHEEL-ASSY,FRONT | ﾌﾛﾝﾄﾎｲｰﾙｱｯｾﾝ | 2 | [TJSW70] INC.8-14 |
| - | 53656-80211 | | WHEEL-ASSY,FRONT | ﾌﾛﾝﾄﾎｲｰﾙｱｯｾﾝ | 2 | [T W70] INC.8-14 |
| - | 53656-80711 | | WHEEL-ASSY,FRONT | ﾌﾛﾝﾄﾎｲｰﾙｱｯｾﾝ | 2 | [TS W70] INC.8-14 |
| 8 | 06006-70012 | | TIRE,700-12-12 | ﾀｲﾔ | 2 | [TJ W70] |
| - | 06005-70012 | | TIRE,700-12-12 | ﾀｲﾔ | 2 | [TJSW70] |
| - | 06001-70012 | | TIRE,700-12-12 | ﾀｲﾔ | 2 | [T W70] |
| - | 06007-70012 | | TIRE,700-12-12 | ﾀｲﾔ | 2 | [TS W70] |
| 9 | 06711-70012 | | TUBE,700-12-12T | ﾁｭｰﾌﾞ | 2 | [TJ W70][TJSW70][T W70] [TS W70] |
| 10 | 06701-70012 | | FLAP,700-12-12F | ﾌﾗｯﾌﾟ | 2 | [TJ W70][TJSW70][T W70] [TS W70] |
| A4 | 53656-80911 | | RIM-ASSY,500S-12TD | ﾘﾑｱｯｾﾝ | 2 | [TJ W70][TJSW70][T W70] [TS W70] INC.11-14 |
| 11 | NO PART NO. | # | RIM | ﾘﾑ | 2 | [TJ W70][TJSW70][T W70] [TS W70] |
| 12 | 53656-82041 | | BAND | ﾊﾞﾝﾄﾞ | 2 | [TJ W70][TJSW70][T W70] [TS W70] |
| 13 | 53656-82051 | | FLANGE,SIDE | ﾌﾗﾝｼﾞ | 2 | [TJ W70][TJSW70][T W70] [TS W70] |
| 14 | 53656-82061 | | RING,LOCK | ﾘﾝｸﾞ | 2 | [TJ W70][TJSW70][T W70] [TS W70] |
| 15 | 06731-00120 | | TUBE,EXTENSION | ﾁｭｰﾌﾞ | 2 | [TJ W70][TJSW70][T W70] [TS W70] |

# FIG.114 FRONT WHEEL [TUJW70][TUSW70][TUWW70][TUGW70]

(F70244E0) フロントホイール

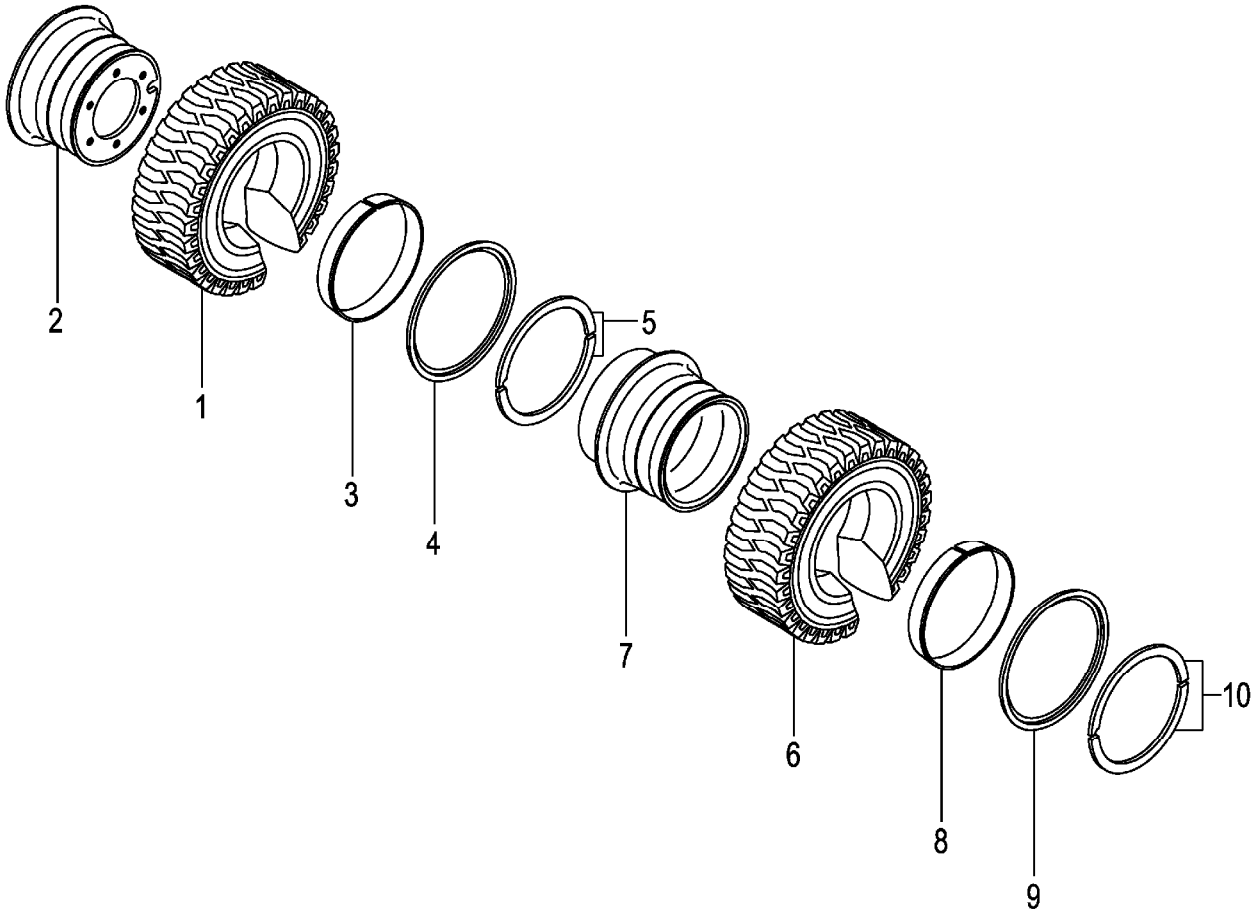

A:FG20C13 FG20T13 FG25C13 FG25T13 C:FD20C13 FD20T13 FD25C13 FD25T13 (F70244E0)
B:FG20C3 FG20T3 FG25C3 FG25T3 FG20W3 FG25W3 D:FD20C3 FD20T3 FD25C3 FD25T3 FD20W3 FD25W3

| Item No | Part No. | Mark | Description | | Req'd | Remarks : Serial No. |
|---|---|---|---|---|---|---|
| A1 | 53656-80401 | | WHEEL-ASSY,FRONT | ﾌﾛﾝﾄﾎｲｰﾙｱｯｾﾝ | 2 | [TUJW70] INC.1-5 |
| - | 522A6-80441 | | WHEEL-ASSY,FRONT | ﾌﾛﾝﾄﾎｲｰﾙｱｯｾﾝ | 2 | [TUSW70] INC.1-5 |
| - | 522A6-80401 | | WHEEL-ASSY,FRONT | ﾌﾛﾝﾄﾎｲｰﾙｱｯｾﾝ | 2 | [TUWW70] INC.1-5 |
| - | 522A6-80421 | | WHEEL-ASSY,FRONT | ﾌﾛﾝﾄﾎｲｰﾙｱｯｾﾝ | 2 | [TUGW70] INC.1-5 |
| 1 | 06806-70012 | | TIRE,UNIQUE,700-12 | ﾀｲﾔ | 2 | [TUJW70] |
| - | 06851-70012 | | TIRE,SOFTONE,700-12 | ﾀｲﾔ | 2 | [TUSW70] |
| - | 06841-70012 | | TIRE,WHITE,700-12 | ﾀｲﾔ | 2 | [TUWW70] |
| - | 06843-70012 | | TIRE,GREEN,700-12 | ﾀｲﾔ | 2 | [TUGW70] |
| A2 | 53656-80901 | | RIM-ASSY,500S-12TD | ﾘﾑｱｯｾﾝ | 2 | [TUJW70][TUSW70][TUWW70] [TUGW70] INC.2-5 |
| 2 | NO PART NO. | # | RIM | ﾘﾑ | 2 | [TUJW70][TUSW70][TUWW70] [TUGW70] |
| 3 | 53656-82041 | | BAND | ﾊﾞﾝﾄﾞ | 2 | [TUJW70][TUSW70][TUWW70] [TUGW70] |
| 4 | 53656-82051 | | FLANGE,SIDE | ﾌﾗﾝｼﾞ | 2 | [TUJW70][TUSW70][TUWW70] [TUGW70] |
| 5 | 53656-82061 | | RING,LOCK | ﾘﾝｸﾞ | 2 | [TUJW70][TUSW70][TUWW70] [TUGW70] |
| A3 | 53656-80411 | | WHEEL-ASSY,FRONT | ﾌﾛﾝﾄﾎｲｰﾙｱｯｾﾝ | 2 | [TUJW70] INC.6-10 |
| - | 522A6-80451 | | WHEEL-ASSY,FRONT | ﾌﾛﾝﾄﾎｲｰﾙｱｯｾﾝ | 2 | [TUSW70] INC.6-10 |
| - | 522A6-80411 | | WHEEL-ASSY,FRONT | ﾌﾛﾝﾄﾎｲｰﾙｱｯｾﾝ | 2 | [TUWW70] INC.6-10 |
| - | 522A6-80431 | | WHEEL-ASSY,FRONT | ﾌﾛﾝﾄﾎｲｰﾙｱｯｾﾝ | 2 | [TUGW70] INC.6-10 |
| 6 | 06806-70012 | | TIRE,UNIQUE,700-12 | ﾀｲﾔ | 2 | [TUJW70] |
| - | 06851-70012 | | TIRE,SOFTONE,700-12 | ﾀｲﾔ | 2 | [TUSW70] |
| - | 06841-70012 | | TIRE,WHITE,700-12 | ﾀｲﾔ | 2 | [TUWW70] |
| - | 06843-70012 | | TIRE,GREEN,700-12 | ﾀｲﾔ | 2 | [TUGW70] |
| A4 | 53656-80911 | | RIM-ASSY,500S-12TD | ﾘﾑｱｯｾﾝ | 2 | [TUJW70][TUSW70][TUWW70] [TUGW70] INC.7-10 |
| 7 | NO PART NO. | # | RIM | ﾘﾑ | 2 | [TUJW70][TUSW70][TUWW70] [TUGW70] |
| 8 | 53656-82041 | | BAND | ﾊﾞﾝﾄﾞ | 2 | [TUJW70][TUSW70][TUWW70] [TUGW70] |
| 9 | 53656-82051 | | FLANGE,SIDE | ﾌﾗﾝｼﾞ | 2 | [TUJW70][TUSW70][TUWW70] [TUGW70] |
| 10 | 53656-82061 | | RING,LOCK | ﾘﾝｸﾞ | 2 | [TUJW70][TUSW70][TUWW70] [TUGW70] |

# FIG.115 REAR WHEEL

(F70244F0) リヤーホイール

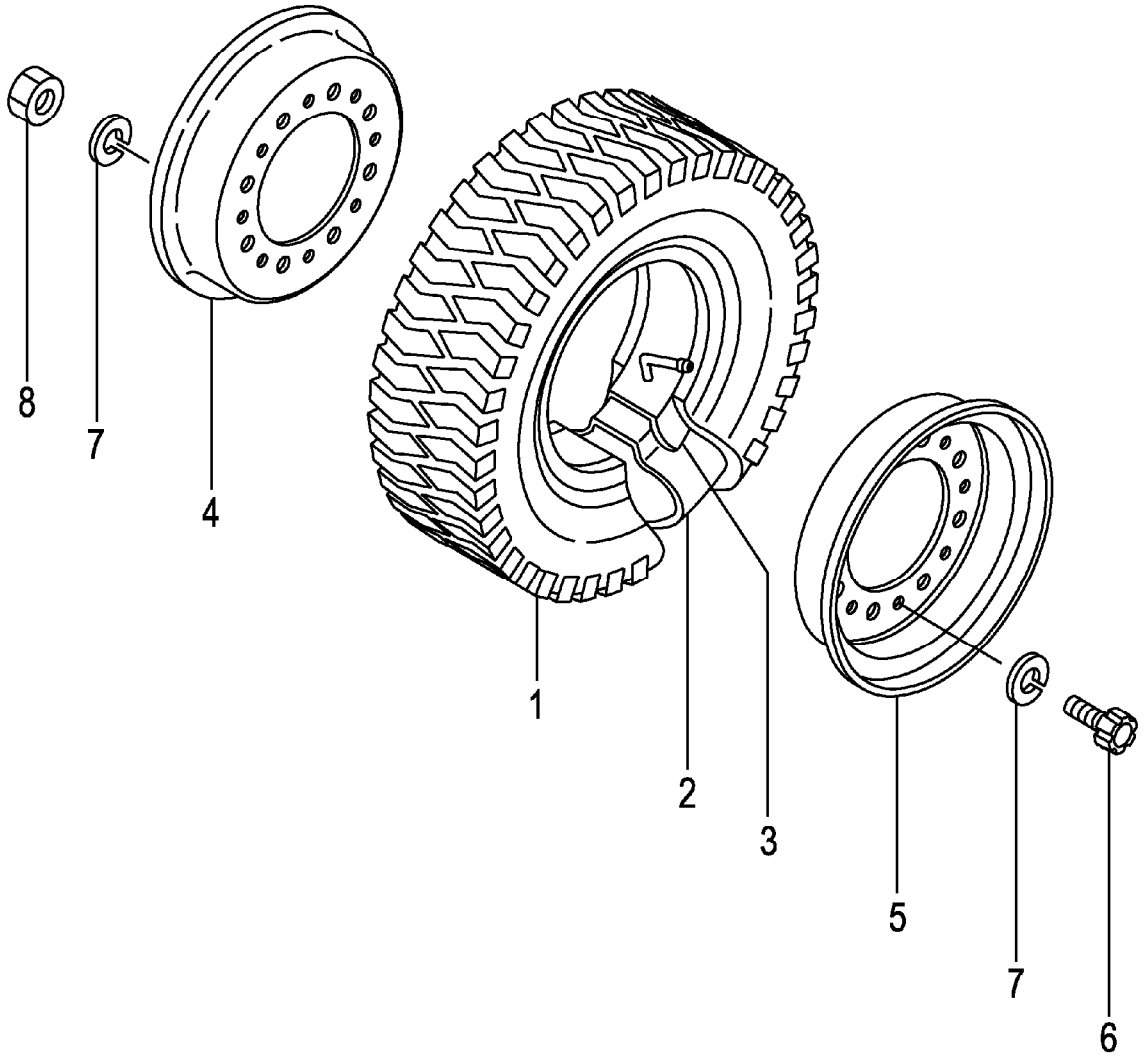

A:FG20C13 FG20T13 FG25C13 FG25T13 C:FD20C13 FD20T13 FD25C13 FD25T13 (F70244F0)
B:FG20C3 FG20T3 FG25C3 FG25T3 FG20W3 FG25W3 D:FD20C3 FD20T3 FD25C3 FD25T3 FD20W3 FD25W3

| Item No | Part No. | Mark | Description | | Req'd | Remarks : Serial No. |
|---|---|---|---|---|---|---|
| A1 | 53656-81501 | | WHEEL-ASSY,REAR | ﾘﾔｰﾎｲｰﾙｱｯｾﾝ | 2 | INC.1-8 |
| 1 | 06006-60009 | | TIRE,600-9-10 | ﾀｲﾔ | 2 | |
| 2 | 06712-60009 | | TUBE,600-9-10T | ﾁｭｰﾌﾞ | 2 | |
| 3 | 06702-60009 | | FLAP,600-9-10F | ﾌﾗｯﾌﾟ | 2 | |
| A2 | 23654-40501 | | RIM-ASSY,400E-9 | ﾘﾑｱｯｾﾝ | 2 | INC.4-8 |
| 4 | NO PART NO. | # | RIM,INSIDE | ﾘﾑ | 2 | |
| 5 | NO PART NO. | # | RIM,OUTSIDE | ﾘﾑ | 2 | |
| 6 | 534F3-82001 | | BOLT | ﾎﾞﾙﾄ | 16 | |
| 7 | 02011-00012 | | WASHER | ﾜｯｼｬ | 32 | |
| 8 | 01400-00012 | | NUT | ﾅｯﾄ | 16 | |

# FIG.116 REAR WHEEL [DR R]

(F70244G0) リヤーホイール

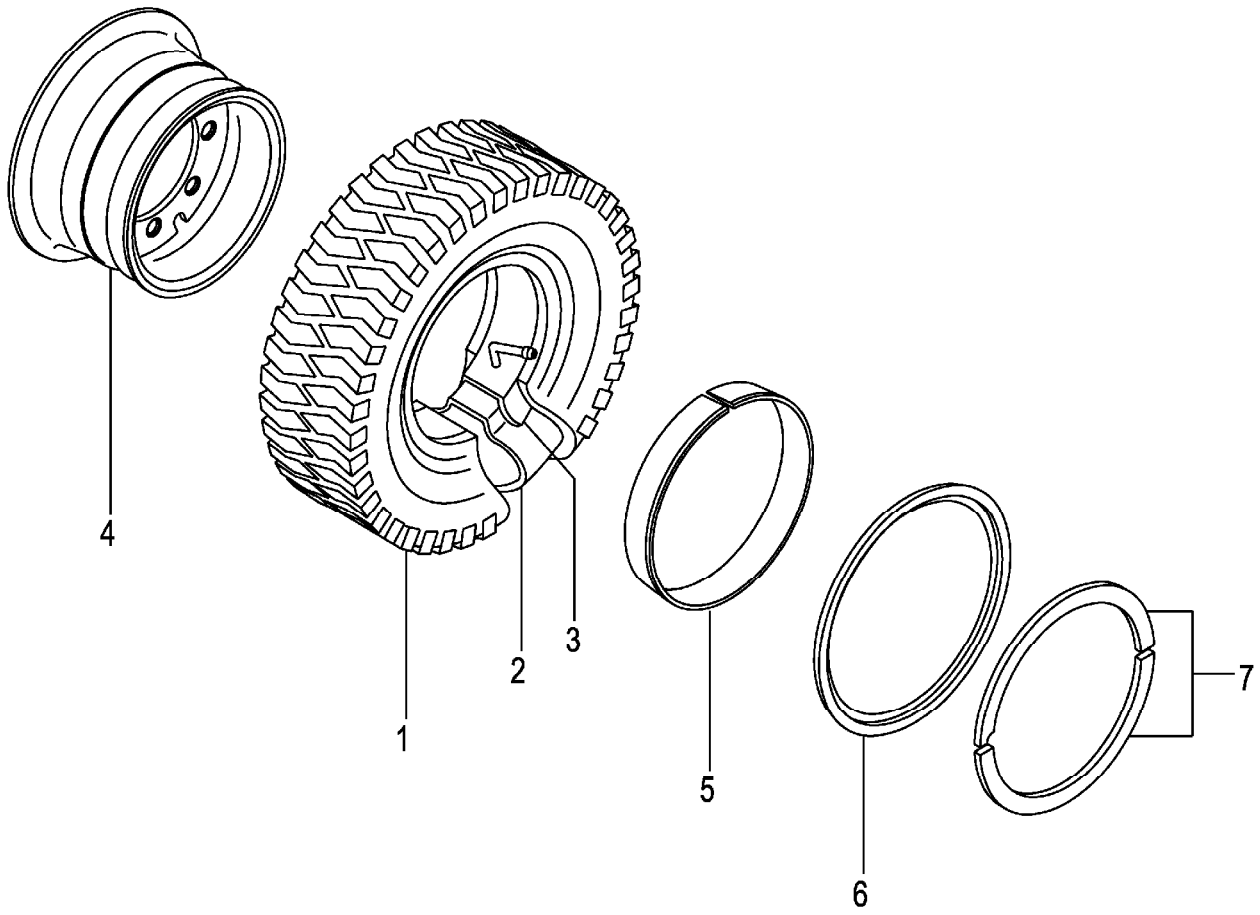

A:FG20C13 FG20T13 FG25C13 FG25T13 C:FD20C13 FD20T13 FD25C13 FD25T13 (F70244G0)
B:FG20C3 FG20T3 FG25C3 FG25T3 FG20W3 FG25W3 D:FD20C3 FD20T3 FD25C3 FD25T3 FD20W3 FD25W3

| Item No | Part No. | Mark | Description | | Req'd | Remarks : Serial No. |
|---|---|---|---|---|---|---|
| A1 | 53666-81501 | | WHEEL-ASSY,REAR | ﾘﾔｰﾎｲｰﾙｱｯｾﾝ | 2 | [DR R] INC.1-7 |
| 1 | 06006-60009 | | TIRE,600-9-10 | ﾀｲﾔ | 2 | [DR R] |
| 2 | 06712-60009 | | TUBE,600-9-10T | ﾁｭｰﾌﾞ | 2 | [DR R] |
| 3 | 06702-60009 | | FLAP,600-9-10F | ﾌﾗｯﾌﾟ | 2 | [DR R] |
| A2 | 53666-81901 | | RIM-ASSY,400E-9 | ﾘﾑｱｯｾﾝ | 2 | [DR R] INC.4-7 |
| 4 | NO PART NO. | # | RIM | ﾘﾑ | 2 | [DR R] |
| 5 | 53666-82021 | | BAND | ﾊﾞﾝﾄﾞ | 2 | [DR R] |
| 6 | 53666-82031 | | FLANGE,SIDE | ﾌﾗﾝｼﾞ | 2 | [DR R] |
| 7 | 53666-82041 | | RING,LOCK | ﾘﾝｸﾞ | 2 | [DR R] |

# FIG.117 REAR WHEEL [TJ R][TJSR][T R][TS R]

(F70244H0) リヤーホイール

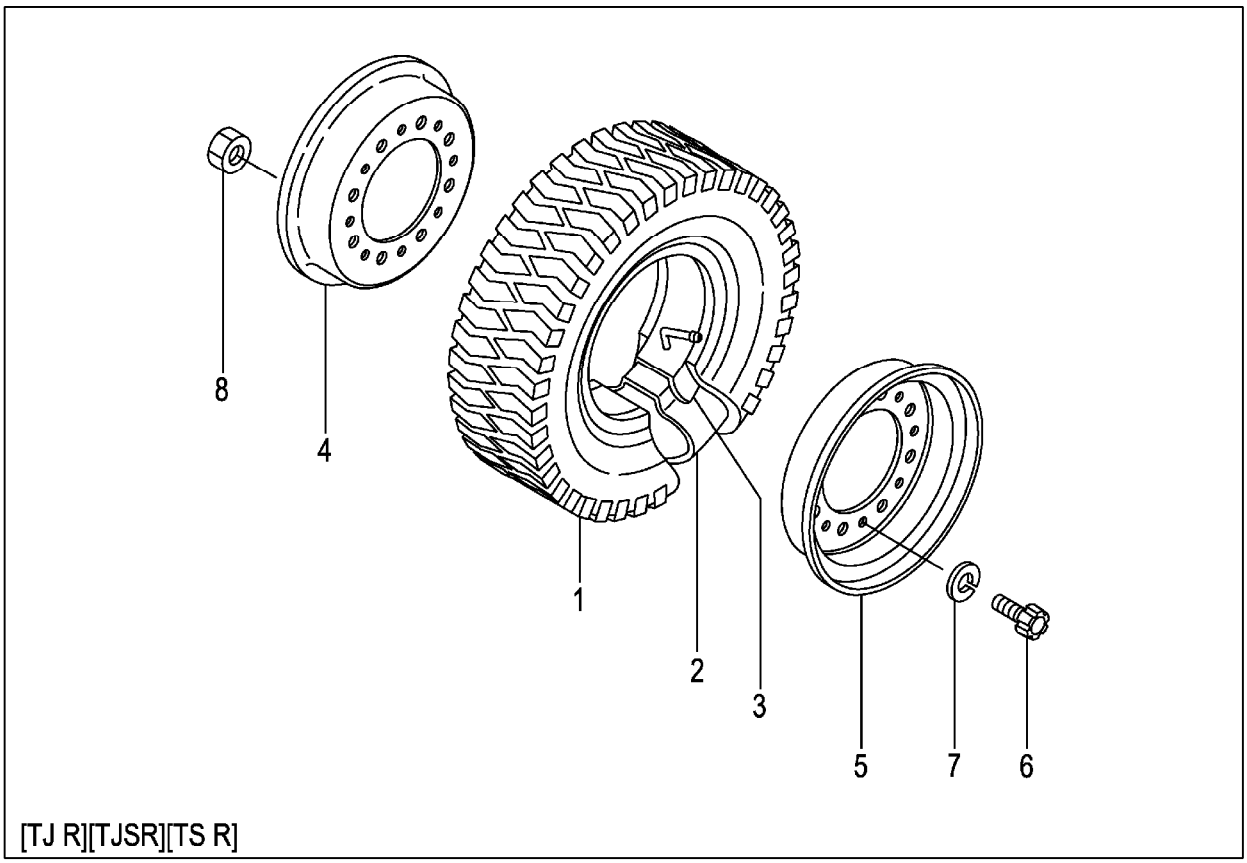


[TJ R][TJSR][TS R]

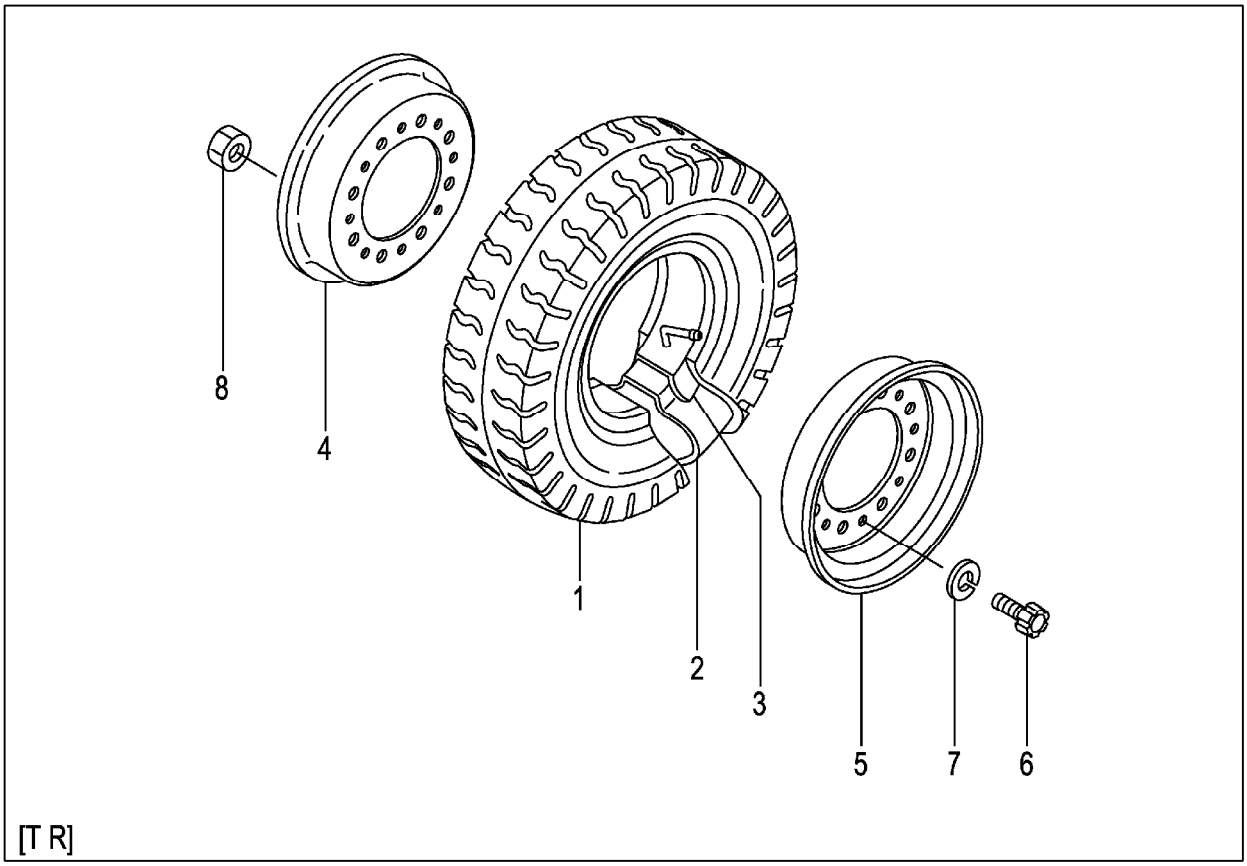


[T R]

A:FG20C13 FG20T13 FG25C13 FG25T13 C:FD20C13 FD20T13 FD25C13 FD25T13 (F70244H0)
B:FG20C3 FG20T3 FG25C3 FG25T3 FG20W3 FG25W3 D:FD20C3 FD20T3 FD25C3 FD25T3 FD20W3 FD25W3

| Item No | Part No. | Mark | Description | | Req'd | Remarks : Serial No. |
|---|---|---|---|---|---|---|
| A1 | 53656-81501 | | WHEEL-ASSY,REAR | ﾘﾔｰﾎｲｰﾙｱｯｾﾝ | 2 | [TJ R] INC.1-8 |
| - | 53656-81401 | | WHEEL-ASSY,REAR | ﾘﾔｰﾎｲｰﾙｱｯｾﾝ | 2 | [TJSR] INC.1-8 |
| - | 23654-40511 | | WHEEL-ASSY,REAR | ﾘﾔｰﾎｲｰﾙｱｯｾﾝ | 2 | [T R] INC.1-8 |
| - | 53656-81601 | | WHEEL-ASSY,REAR | ﾘﾔｰﾎｲｰﾙｱｯｾﾝ | 2 | [TS R] INC.1-8 |
| 1 | 06006-60009 | | TIRE,600-9-10 | ﾀｲﾔ | 2 | [TJ R] |
| - | 06005-60009 | | TIRE,600-9-10 | ﾀｲﾔ | 2 | [TJSR] |
| - | 06001-60009 | | TIRE,600-9-10 | ﾀｲﾔ | 2 | [T R] |
| - | 06007-60009 | | TIRE,600-9-10 | ﾀｲﾔ | 2 | [TS R] |
| 2 | 06712-60009 | | TUBE,600-9-10T | ﾁｭｰﾌﾞ | 2 | [TJ R][TJSR][T R][TS R] |
| 3 | 06702-60009 | | FLAP,600-9-10F | ﾌﾗｯﾌﾟ | 2 | [TJ R][TJSR][T R][TS R] |
| A2 | 23654-40501 | | RIM-ASSY,400E-9 | ﾘﾑｱｯｾﾝ | 2 | [TJ R][TJSR][T R][TS R] INC.4-8 |
| 4 | NO PART NO. | # | RIM,INSIDE | ﾘﾑ | 2 | [TJ R][TJSR][T R][TS R] |
| 5 | NO PART NO. | # | RIM,OUTSIDE | ﾘﾑ | 2 | [TJ R][TJSR][T R][TS R] |
| 6 | 534F3-82001 | | BOLT | ﾎﾞﾙﾄ | 16 | [TJ R][TJSR][T R][TS R] |
| 7 | 02011-00012 | | WASHER | ﾜｯｼｬ | 32 | [TJ R][TJSR][T R][TS R] |
| 8 | 01400-00012 | | NUT | ﾅｯﾄ | 16 | [TJ R][TJSR][T R][TS R] |

# FIG.118 REAR WHEEL [(TJ R,TJSR,T R,TS R)/DR R]

(F70244J0) リヤーホイール

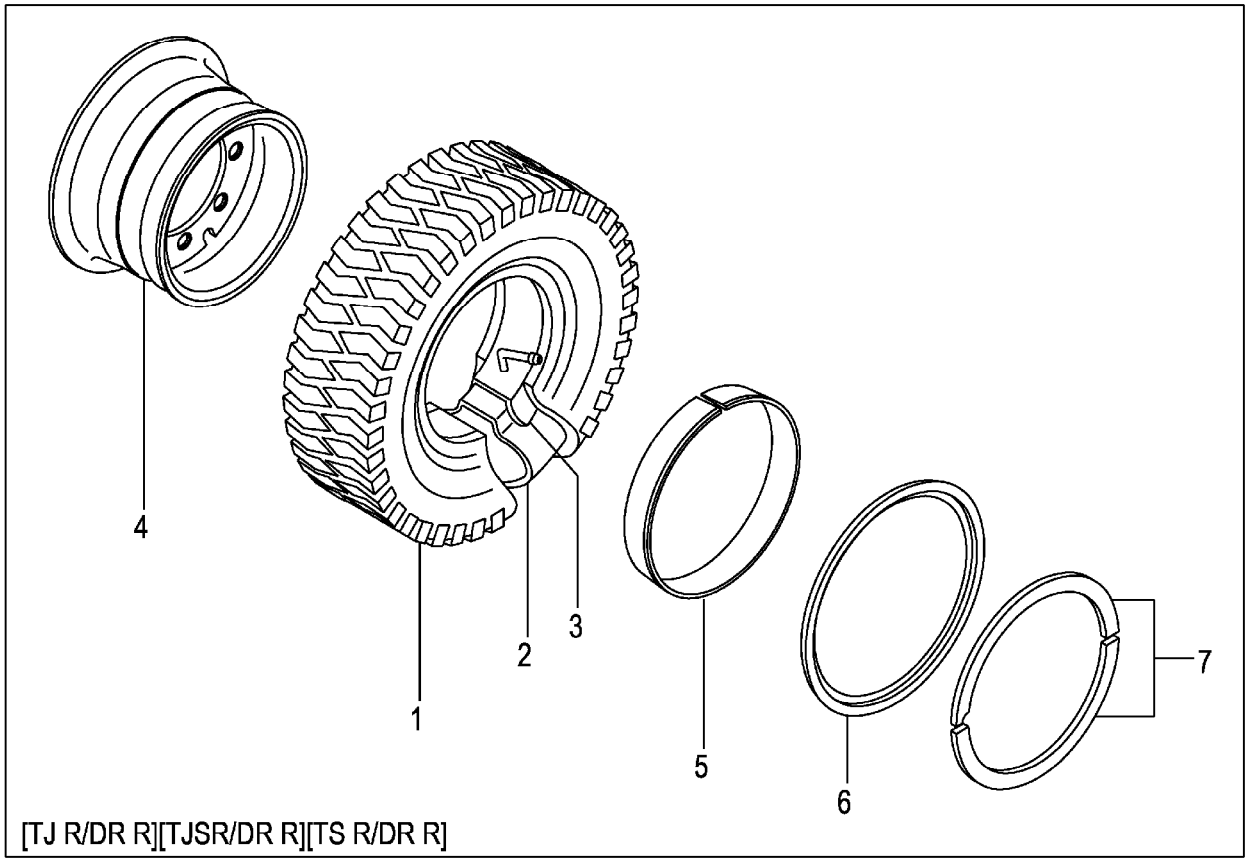


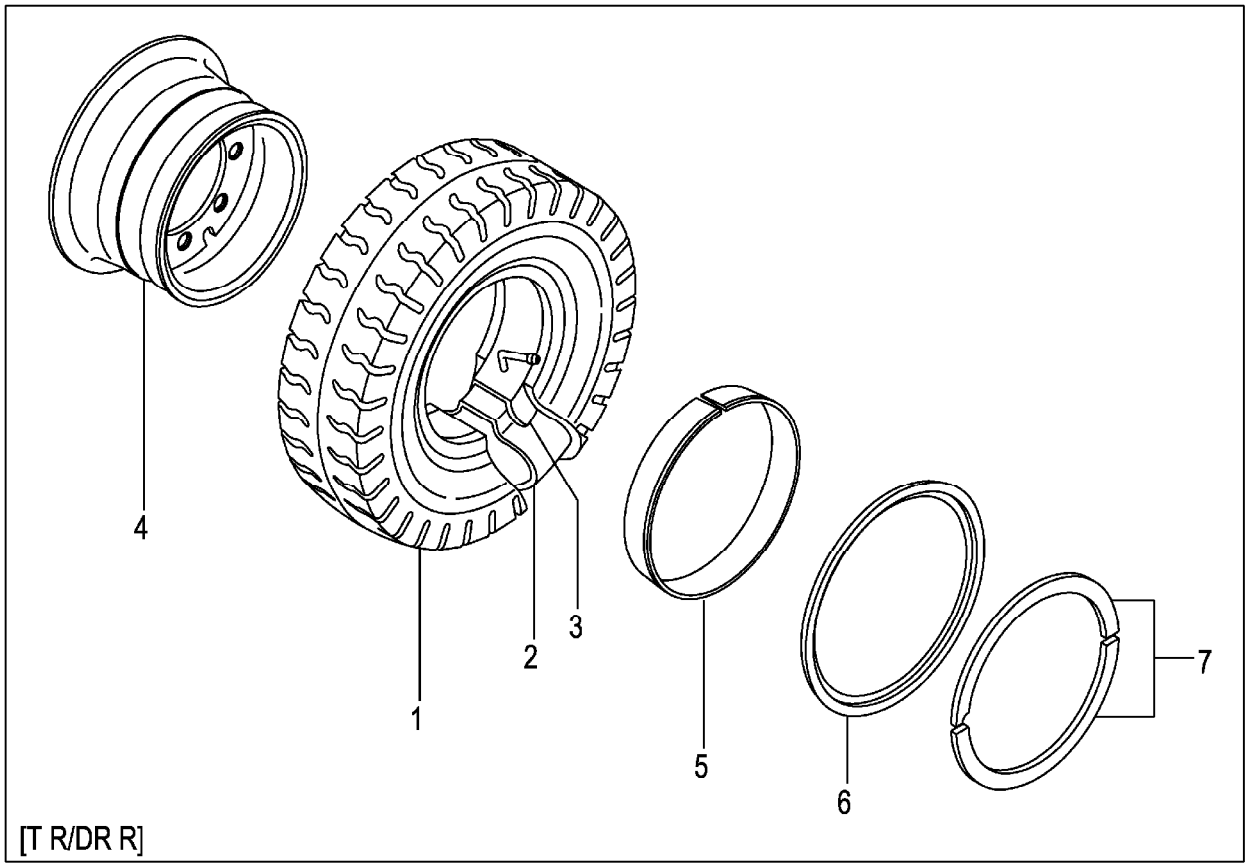

A:FG20C13 FG20T13 FG25C13 FG25T13 C:FD20C13 FD20T13 FD25C13 FD25T13 (F70244J0)
B:FG20C3 FG20T3 FG25C3 FG25T3 FG20W3 FG25W3 D:FD20C3 FD20T3 FD25C3 FD25T3 FD20W3 FD25W3

| Item No | Part No. | Mark | Description | | Req'd | Remarks : Serial No. |
|---|---|---|---|---|---|---|
| A1 | 53666-81501 | | WHEEL-ASSY,REAR | ﾘﾔｰﾎｲｰﾙｱｯｾﾝ | 2 | [TJ R/DR R] INC.1-7 |
| - | 53666-81401 | | WHEEL-ASSY,REAR | ﾘﾔｰﾎｲｰﾙｱｯｾﾝ | 2 | [TJSR/DR R] INC.1-7 |
| - | 53666-80901 | | WHEEL-ASSY,REAR | ﾘﾔｰﾎｲｰﾙｱｯｾﾝ | 2 | [T R/DR R] INC.1-7 |
| - | 53666-81601 | | WHEEL-ASSY,REAR | ﾘﾔｰﾎｲｰﾙｱｯｾﾝ | 2 | [TS R/DR R] INC.1-7 |
| 1 | 06006-60009 | | TIRE,600-9-10 | ﾀｲﾔ | 2 | [TJ R/DR R] |
| - | 06005-60009 | | TIRE,600-9-10 | ﾀｲﾔ | 2 | [TJSR/DR R] |
| - | 06001-60009 | | TIRE,600-9-10 | ﾀｲﾔ | 2 | [T R/DR R] |
| - | 06007-60009 | | TIRE,600-9-10 | ﾀｲﾔ | 2 | [TS R/DR R] |
| 2 | 06712-60009 | | TUBE,600-9-10T | ﾁｭｰﾌﾞ | 2 | [TJ R/DR R][TJSR/DR R] |
| | | | | | | [T R/DR R][TS R/DR R] |
| 3 | 06702-60009 | | FLAP,600-9-10F | ﾌﾗｯﾌﾟ | 2 | [TJ R/DR R][TJSR/DR R] |
| | | | | | | [T R/DR R][TS R/DR R] |
| A2 | 53666-81901 | | RIM-ASSY,400E-9 | ﾘﾑｱｯｾﾝ | 2 | [TJ R/DR R][TJSR/DR R] INC.4-7 |
| - | 53666-81901 | | RIM-ASSY,400E-9 | ﾘﾑｱｯｾﾝ | 2 | [T R/DR R][TS R/DR R] INC.4-7 |
| 4 | NO PART NO. | # | RIM | ﾘﾑ | 2 | [TJ R/DR R][TJSR/DR R] |
| | | | | | | [T R/DR R][TS R/DR R] |
| 5 | 53666-82021 | | BAND | ﾊﾞﾝﾄﾞ | 2 | [TJ R/DR R][TJSR/DR R] |
| | | | | | | [T R/DR R][TS R/DR R] |
| 6 | 53666-82031 | | FLANGE,SIDE | ﾌﾗﾝｼﾞ | 2 | [TJ R/DR R][TJSR/DR R] |
| | | | | | | [T R/DR R][TS R/DR R] |
| 7 | 53666-82041 | | RING,LOCK | ﾘﾝｸﾞ | 2 | [TJ R/DR R][TJSR/DR R] |
| | | | | | | [T R/DR R][TS R/DR R] |

# FIG.119 REAR WHEEL [TSUR][TUJR][TUSR][TUWR][TUGR]

(F70244K0) リヤーホイール

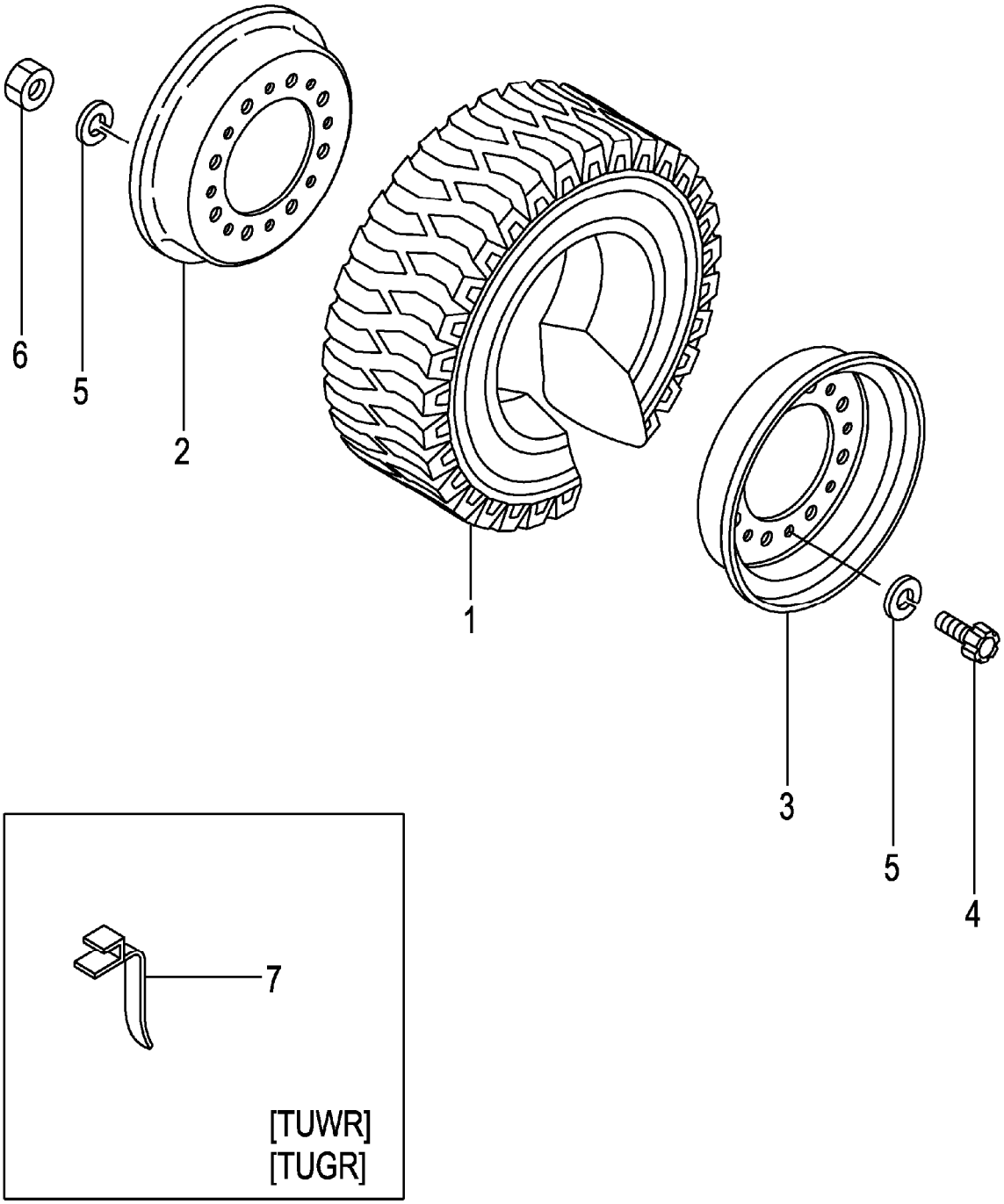

A:FG20C13 FG20T13 FG25C13 FG25T13 D:FD20C13 FD20T13 FD25C13 FD25T13
B:FG20C3 FG20T3 FG25C3 FG25T3 E:FD20C3 FD20T3 FD25C3 FD25T3
C:FG20W3 FG25W3 F:FD20W3 FD25W3

**FIG.119**
(F70244K0)

| Item No | Part No. | Mark | Description | | Req'd | Remarks : Serial No. |
|---|---|---|---|---|---|---|
| A1 | 539A6-80301 | | WHEEL-ASSY,REAR | ﾘﾔｰﾎｲｰﾙｱｯｾﾝ | 2 | [TSUR] INC.1-6 |
| - | 53656-81301 | | WHEEL-ASSY,REAR | ﾘﾔｰﾎｲｰﾙｱｯｾﾝ | 2 | [TUJR] INC.1-6 |
| - | 53656-81301 | | WHEEL-ASSY,REAR | ﾘﾔｰﾎｲｰﾙｱｯｾﾝ | 2 | [TUJR] INC.1-6 |
| - | 522A3-80451 | | WHEEL-ASSY,REAR | ﾘﾔｰﾎｲｰﾙｱｯｾﾝ | 2 | [TUJR] INC.1-6 |
| - | 522A3-80451 | | WHEEL-ASSY,REAR | ﾘﾔｰﾎｲｰﾙｱｯｾﾝ | 2 | B,E<br>[TUJR/EX] INC.1-6 |
| - | 522A6-80521 | | WHEEL-ASSY,REAR | ﾘﾔｰﾎｲｰﾙｱｯｾﾝ | 2 | [TUSR] INC.1-6 |
| - | 522A6-80501 | | WHEEL-ASSY,REAR | ﾘﾔｰﾎｲｰﾙｱｯｾﾝ | 2 | [TUWR] INC.1-6 |
| - | 522A6-80511 | | WHEEL-ASSY,REAR | ﾘﾔｰﾎｲｰﾙｱｯｾﾝ | 2 | [TUGR] INC.1-6 |
| 1 | 06807-60009 | | TIRE,UNIQUE,600-9 | ﾀｲﾔ | 2 | [TSUR] |
| - | 06806-60009 | | TIRE,UNIQUE,600-9 | ﾀｲﾔ | 2 | [TUJR] |
| - | 06806-60009 | | TIRE,UNIQUE,600-9 | ﾀｲﾔ | 2 | [TUJR] |
| - | 06807-60009 | | TIRE,UNIQUE,600-9 | ﾀｲﾔ | 2 | [TUJR] |
| - | 06807-60009 | | TIRE,UNIQUE,600-9 | ﾀｲﾔ | 2 | B,E<br>[TUJR/EX] |
| - | 06851-60009 | | TIRE,SOFTONE,600-9 | ﾀｲﾔ | 2 | [TUSR] |
| - | 06841-60009 | | TIRE,WHITE,600-9 | ﾀｲﾔ | 2 | [TUWR] |
| - | 06843-60009 | | TIRE,GREEN,600-9 | ﾀｲﾔ | 2 | [TUGR] |
| A2 | 23654-40501 | | RIM-ASSY,400E-9 | ﾘﾑｱｯｾﾝ | 2 | [TSUR][TUJR][TUSR][TUWR]<br>[TUGR] INC.2-6 |
| 2 | NO PART NO. | # | RIM,INSIDE | ﾘﾑ | 2 | [TSUR][TUJR][TUSR][TUWR]<br>[TUGR] |
| 3 | NO PART NO. | # | RIM,OUTSIDE | ﾘﾑ | 2 | [TSUR][TUJR][TUSR][TUWR]<br>[TUGR] |
| 4 | 534F3-82001 | | BOLT | ﾎﾞﾙﾄ | 16 | [TSUR][TUJR][TUSR][TUWR]<br>[TUGR] |
| 5 | 02011-00012 | | WASHER | ﾜｯｼｬ | 32 | [TSUR][TUJR][TUSR][TUWR]<br>[TUGR] |
| 6 | 01400-00012 | | NUT | ﾅｯﾄ | 16 | [TSUR][TUJR][TUSR][TUWR]<br>[TUGR] |
| 7 | 571A6-82081 | | BELT,EARTH | ﾍﾞﾙﾄ | 1 | [TUWR][TUGR] |

# FIG.120 REAR WHEEL [TUJR/DR R]

(F70244L0) リヤーホイール

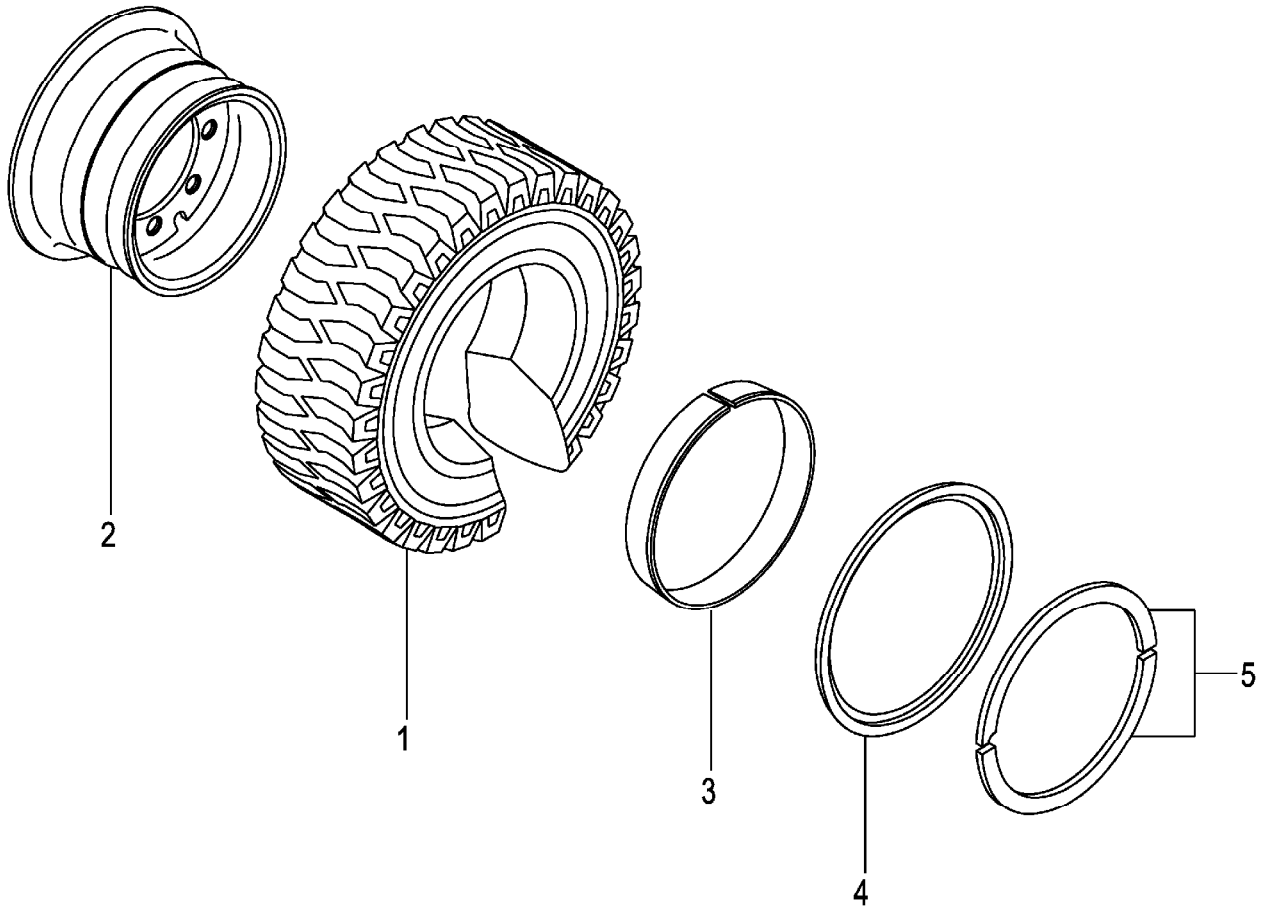

A:FG20C13 FG20T13 FG25C13 FG25T13 C:FD20C13 FD20T13 FD25C13 FD25T13 (F70244L0)
B:FG20C3 FG20T3 FG25C3 FG25T3 FG20W3 FG25W3 D:FD20C3 FD20T3 FD25C3 FD25T3 FD20W3 FD25W3

| Item No | Part No. | Mark | Description | | Req'd | Remarks : Serial No. |
|---|---|---|---|---|---|---|
| A1 | 53666-81301 | | WHEEL-ASSY,REAR | ﾘﾔｰﾎｲｰﾙｱｯｾﾝ | 2 | [TUJR/DR R] INC.1-5 |
| 1 | 06806-60009 | | TIRE,UNIQUE,600-9 | ﾀｲﾔ | 2 | [TUJR/DR R] |
| A2 | 53666-81901 | | RIM-ASSY,400E-9 | ﾘﾑｱｯｾﾝ | 2 | [TUJR/DR R] INC.2-5 |
| 2 | NO PART NO. | # | RIM | ﾘﾑ | 2 | [TUJR/DR R] |
| 3 | 53666-82021 | | BAND | ﾊﾞﾝﾄﾞ | 2 | [TUJR/DR R] |
| 4 | 53666-82031 | | FLANGE,SIDE | ﾌﾗﾝｼﾞ | 2 | [TUJR/DR R] |
| 5 | 53666-82041 | | RING,LOCK | ﾘﾝｸﾞ | 2 | [TUJR/DR R] |

# FIG.121 REAR WHEEL [TRAR]

(F70244M0) リヤーホイール

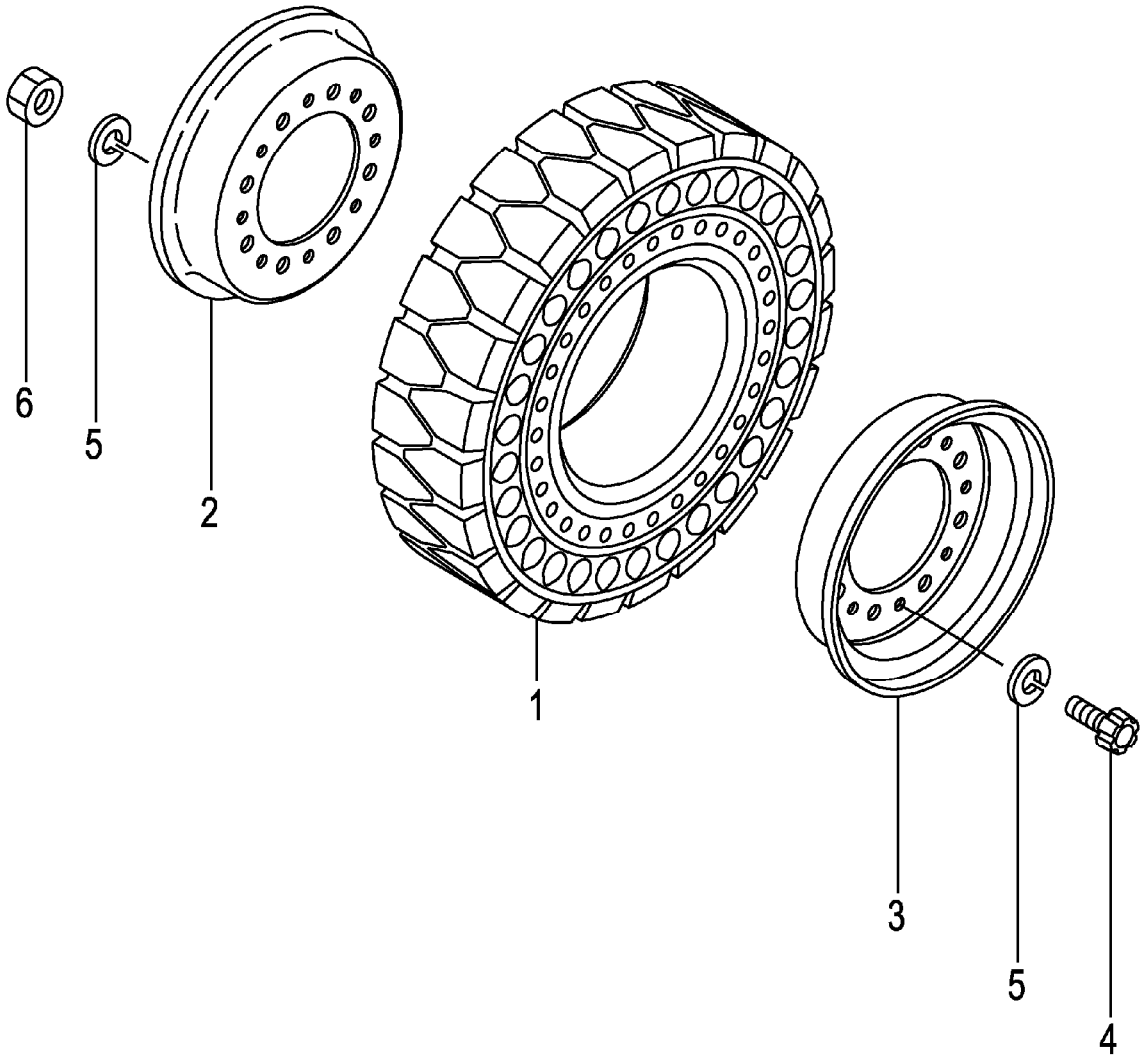

A:FG20C13 FG20T13 FG25C13 FG25T13 C:FD20C13 FD20T13 FD25C13 FD25T13 (F70244M0)
B:FG20C3 FG20T3 FG25C3 FG25T3 FG20W3 FG25W3 D:FD20C3 FD20T3 FD25C3 FD25T3 FD20W3 FD25W3

| Item No | Part No. | Mark | Description | | Req'd | Remarks : Serial No. |
|---|---|---|---|---|---|---|
| A1 | 534A6-80271 | | WHEEL-ASSY,REAR | ﾘﾔｰﾎｲｰﾙｱｯｾﾝ | 2 | [TRAR] INC.1-6 |
| 1 | 534A6-85001 | | TIRE,AIR-BOSS,600-9 | ﾀｲﾔ | 2 | [TRAR] |
| A2 | 23654-40501 | | RIM-ASSY,400E-9 | ﾘﾑｱｯｾﾝ | 2 | [TRAR] INC.2-6 |
| 2 | NO PART NO. | # | RIM,INSIDE | ﾘﾑ | 2 | [TRAR] |
| 3 | NO PART NO. | # | RIM,OUTSIDE | ﾘﾑ | 2 | [TRAR] |
| 4 | 534F3-82001 | | BOLT | ﾎﾞﾙﾄ | 16 | [TRAR] |
| 5 | 02011-00012 | | WASHER | ﾜｯｼｬ | 32 | [TRAR] |
| 6 | 01400-00012 | | NUT | ﾅｯﾄ | 16 | [TRAR] |

# FIG.122 POWER CYLINDER

(F7024510) ﾊﾟﾜｰｼﾘﾝﾀﾞ

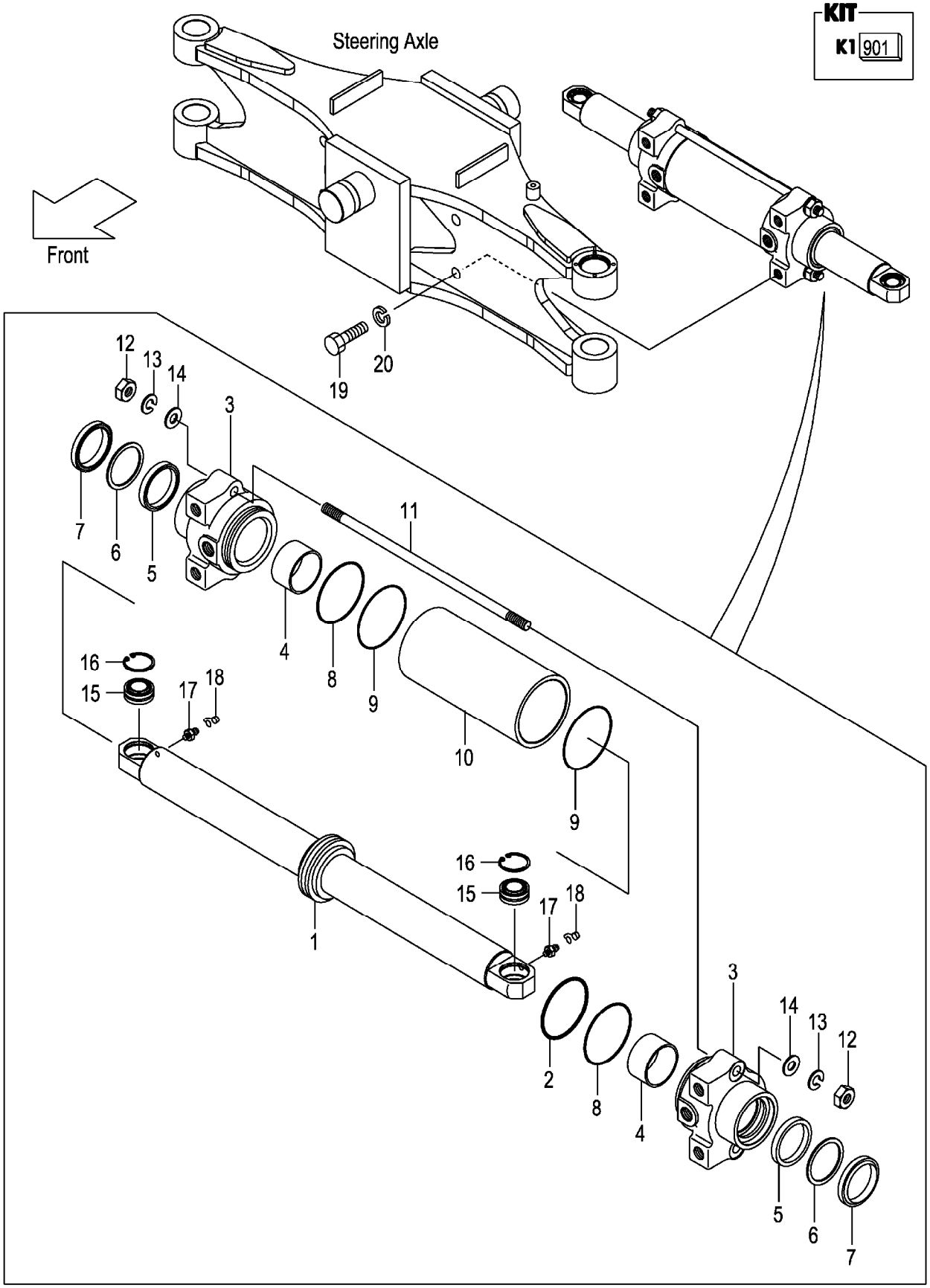

A:FG20C13 FG20T13 FG25C13 FG25T13 C:FD20C13 FD20T13 FD25C13 FD25T13 (F7024510)
B:FG20C3 FG20T3 FG25C3 FG25T3 FG20W3 FG25W3 D:FD20C3 FD20T3 FD25C3 FD25T3 FD20W3 FD25W3

| Item No | Part No. | Mark | Description | | Req'd | Remarks : Serial No. |
|---|---|---|---|---|---|---|
| A1 | 22N54-50201 | | CYL-ASSY,PS | ﾊﾟﾜｽﾃｼﾘﾝﾀﾞｱｯｾﾝ | 1 | INC.1-18 |
| 901 | 22N54-59801 | K1 | KIT,OVERHAUL | ｵｰﾊﾞﾎｰﾙｷｯﾄ | 1 | INC.2,5-9 |
| A2 | 22N54-50221 | | ROD-ASSY,PISTON | ﾋﾟｽﾄﾝﾛｯﾄﾞｱｯｾﾝ | 1 | INC.1,2 |
| 1 | 22N54-52001 | | ROD,PISTON | ﾛｯﾄﾞ | 1 | |
| 2 | 514A2-42201 | * | SEAL | ｼｰﾙ | 1 | |
| 3 | 22N54-52101 | | CAP,CYL | ｷｬｯﾌﾟ | 2 | |
| 4 | 22N54-52121 | | BUSHING,DU | ﾌﾞｯｼﾝｸﾞ | 2 | A:1-128 |
| | | | | | | B:1-239 |
| | | | | | | C:1-125 |
| | | | | | | D:1-505 |
| - | 23460-53171 | | BUSHING,DU | ﾌﾞｯｼﾝｸﾞ | 2 | A:129- |
| | | | | | | B:240- |
| | | | | | | C:126- |
| | | | | | | D:506- |
| 5 | 97103-35431 | * | PACKING | ﾊﾟｯｷﾝｸﾞ | 2 | |
| 6 | 22658-52301 | * | RING,BACK-UP | ﾘﾝｸﾞ | 2 | |
| 7 | 22N54-52141 | * | SEAL,DUST | ｼｰﾙ | 2 | |
| 8 | 03350-00750 | * | O-RING | Oﾘﾝｸﾞ | 2 | |
| 9 | 22N54-52151 | * | O-RING | Oﾘﾝｸﾞ | 2 | |
| 10 | 22N54-52201 | | TUBE,CYL | ﾁｭｰﾌﾞ | 1 | |
| 11 | 22N54-52251 | | BOLT | ﾎﾞﾙﾄ | 2 | |
| 12 | 01400-00012 | | NUT | ﾅｯﾄ | 4 | |
| 13 | 02010-00012 | | WASHER | ﾜｯｼｬ | 4 | |
| 14 | 02000-00012 | | WASHER | ﾜｯｼｬ | 4 | |
| 15 | 215E4-52231 | | JOINT,SPHERE-FACE | ｼﾞｮｲﾝﾄ | 2 | |
| 16 | 02110-00035 | | RING,SNAP | ｽﾅｯﾌﾟﾘﾝｸﾞ | 2 | |
| 17 | 214A8-52051 | | NIPPLE,GREASE | ﾆｯﾌﾟﾙ | 2 | |
| 18 | 22199-12401 | | CAP,NIPPLE | ｷｬｯﾌﾟ | 2 | |
| 19 | 01100-16040 | | BOLT | ﾎﾞﾙﾄ | 4 | |
| 20 | 02010-00016 | | WASHER | ﾜｯｼｬ | 4 | |

# FIG.123 OVERHEAD GUARD

(F7025110) オーバヘッドガード

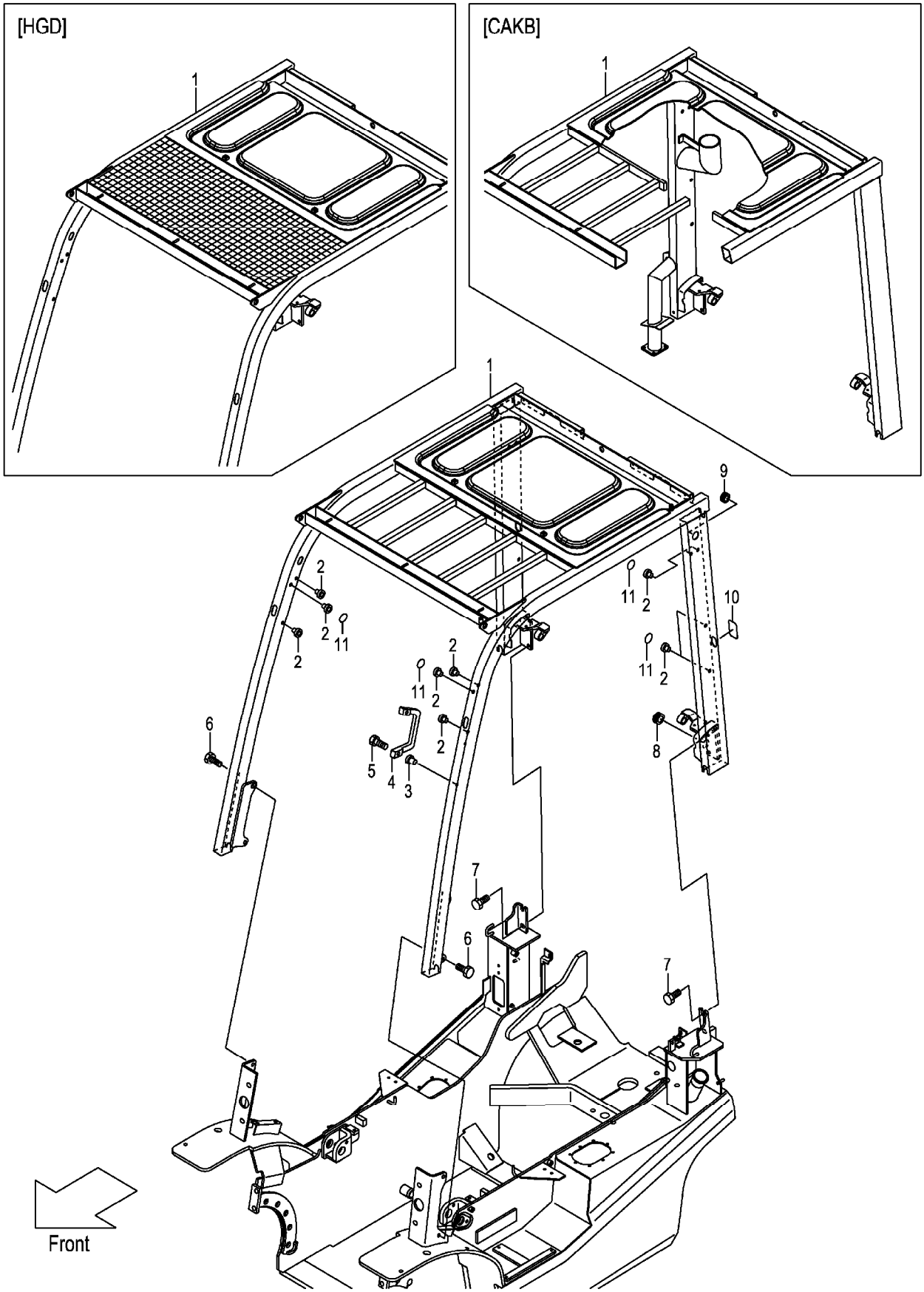

A:FG20C13 FG20T13 FG25C13 FG25T13 D:FD20C13 FD20T13 FD25C13 FD25T13
B:FG20C3 FG20T3 FG25C3 FG25T3 E:FD20C3 FD20T3 FD25C3 FD25T3
C:FG20W3 FG25W3 F:FD20W3 FD25W3

**FIG.123**
(F7025110)

| Item No | Part No. | Mark | Description | | Req'd | Remarks : Serial No. |
|---|---|---|---|---|---|---|
| 1 | 22N55-10161 | | GUARD,HEAD | ｶﾞｰﾄﾞ | 1 | (WITHOUT SCB001,SCBCR) |
| - | 52N52-90201 | | GUARD,HEAD | ｶﾞｰﾄﾞ | 1 | [HGD] |
| - | 52N55-00101 | | GUARD,HEAD | ｶﾞｰﾄﾞ | 1 | [HGH060] |
| - | 52N55-00111 | | GUARD,HEAD | ｶﾞｰﾄﾞ | 1 | [HGH100] |
| - | 52N55-00121 | | GUARD,HEAD | ｶﾞｰﾄﾞ | 1 | [HGH150] |
| - | 52N55-00131 | | GUARD,HEAD | ｶﾞｰﾄﾞ | 1 | [HGH200] |
| - | 52N55-00141 | | GUARD,HEAD | ｶﾞｰﾄﾞ | 1 | [HGL] |
| - | 52N50-90101 | | GUARD,HEAD | ｶﾞｰﾄﾞ | 1 | [CAKB] |
| - | 52N55-00101 | | GUARD,HEAD | ｶﾞｰﾄﾞ | 1 | B,E<br>[EXC][EXE][EXN] |
| - | 52N55-00111 | | GUARD,HEAD | ｶﾞｰﾄﾞ | 1 | B,E<br>[HGH100/EXC][HGH100/EXE]<br>[HGH100/EXN] |
| - | 52N55-00121 | | GUARD,HEAD | ｶﾞｰﾄﾞ | 1 | B,E<br>[HGH150/EXC][HGH150/EXE]<br>[HGH150/EXN] |
| - | 52N55-00131 | | GUARD,HEAD | ｶﾞｰﾄﾞ | 1 | B,E<br>[HGH200/EXC][HGH200/EXE]<br>[HGH200/EXN] |
| 2 | 514A5-12011 | | RIVET,POP | ﾘﾍﾞｯﾄ | 4 | A:1-128<br>B,C:1-239<br>D:1-125<br>E,F:1-505<br>(WITHOUT SCB001,SCBCR) |
| - | 514A5-12011 | | RIVET,POP | ﾘﾍﾞｯﾄ | 14 | A:129-<br>B,C:240-<br>D:126-<br>E,F:506-<br>(WITHOUT SCB001,SCBCR) |
| 3 | 516G5-13151 | | RIVET,POP | ﾘﾍﾞｯﾄ | 2 | (WITHOUT SCB001,SCBCR) |
| 4 | 516G5-13051 | | GRIP | ｸﾞﾘｯﾌﾟ | 1 | (WITHOUT SCB001,SCBCR) |
| 5 | 01171-06025 | | BOLT | ﾎﾞﾙﾄ | 2 | (WITHOUT SCB001,SCBCR) |
| 6 | 01186-12040 | | BOLT | ﾎﾞﾙﾄ | 4 | (WITHOUT SCB001,SCBCR) |
| 7 | 01186-12025 | | BOLT | ﾎﾞﾙﾄ | 4 | (WITHOUT SCB001,SCBCR) |
| 8 | 524W5-12091 | | GROMMET | ｸﾞﾛﾒｯﾄ | 1 | (WITHOUT SCB001,SCBCR) |
| 9 | 27662-62721 | | GROMMET | ｸﾞﾛﾒｯﾄ | 1 | (WITHOUT SCB001,SCBCR) |
| 10 | 22N55-13191 | | SEAT,HG | ｼｰﾄ | 2 | (WITHOUT SCB001,SCBCR) |
| 11 | 22N55-13181 | | SEAL,PANEL-COVER | ｼｰﾙ | 10 | (WITHOUT SCB001,SCBCR) |

# FIG.124 FRONT LAMP BRACKET

(F7025120) フロントランプブラケット

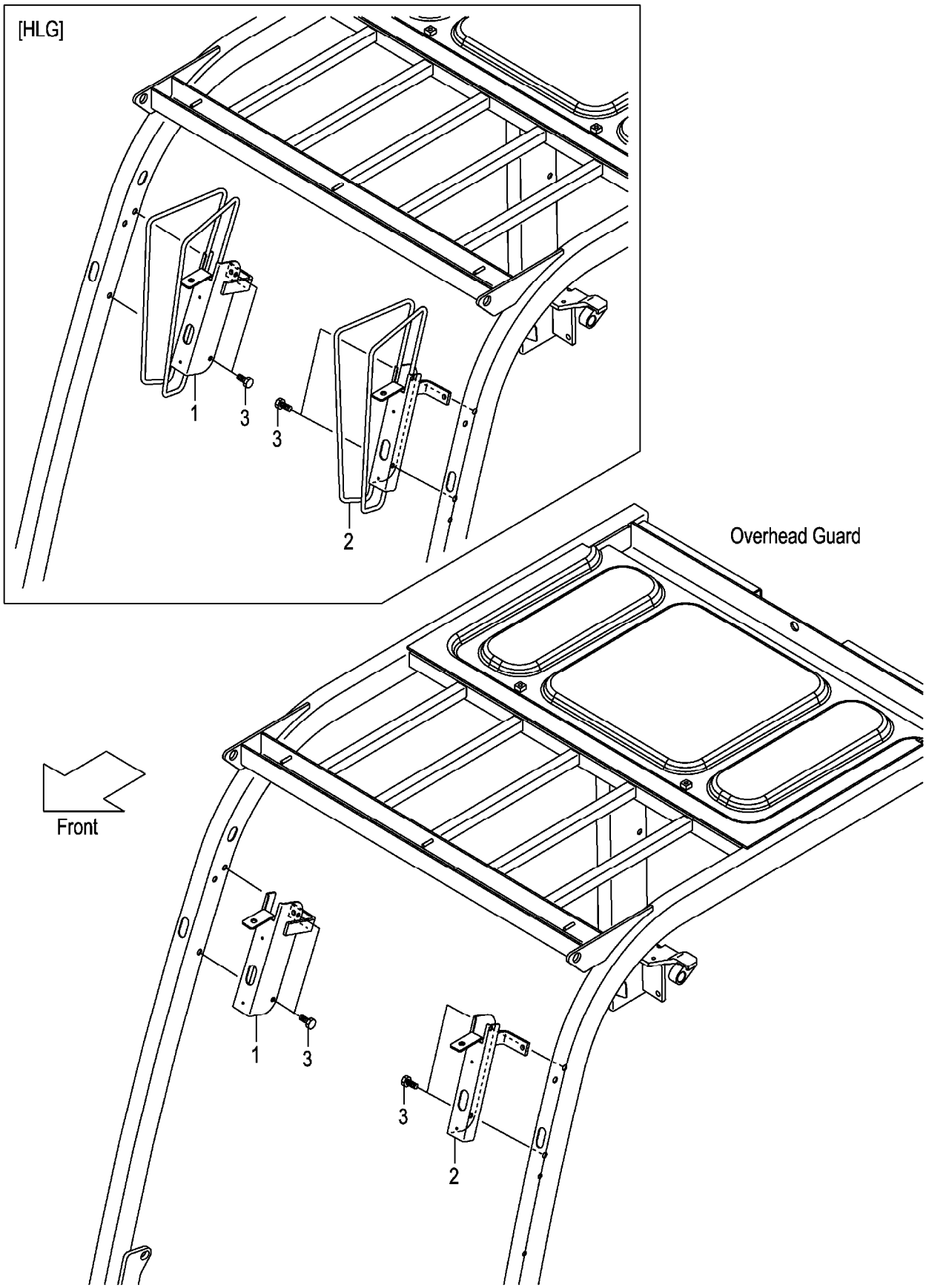

A:FG20C13 FG20T13 FG25C13 FG25T13 C:FD20C13 FD20T13 FD25C13 FD25T13 (F7025120)
B:FG20C3 FG20T3 FG25C3 FG25T3 FG20W3 FG25W3 D:FD20C3 FD20T3 FD25C3 FD25T3 FD20W3 FD25W3

| Item No | Part No. | Mark | Description | Req'd | Remarks : Serial No. |
|---|---|---|---|---|---|
| 1 | 22N55-12271 | | BRACKET,HEAD-LAMP,RH ﾌﾞﾗｹｯﾄ | 1 | (WITHOUT SCB001,SCBCR,AW071) |
| - | 52N55-12101 | | BRACKET,HEAD-LAMP,RH ﾌﾞﾗｹｯﾄ | 1 | [HLG] |
| 2 | 22N55-12281 | | BRACKET,HEAD-LAMP,LH ﾌﾞﾗｹｯﾄ | 1 | (WITHOUT SCB001,SCBCR,AW071) |
| - | 52N55-12111 | | BRACKET,HEAD-LAMP,LH ﾌﾞﾗｹｯﾄ | 1 | [HLG] |
| 3 | 514A5-12021 | | BOLT ﾎﾞﾙﾄ | 4 | (WITHOUT SCB001,SCBCR,AW071) |

# FIG.125 FRONT LAMP BRACKET [HL][BKH]

(F7025130) フロントランプブラケット

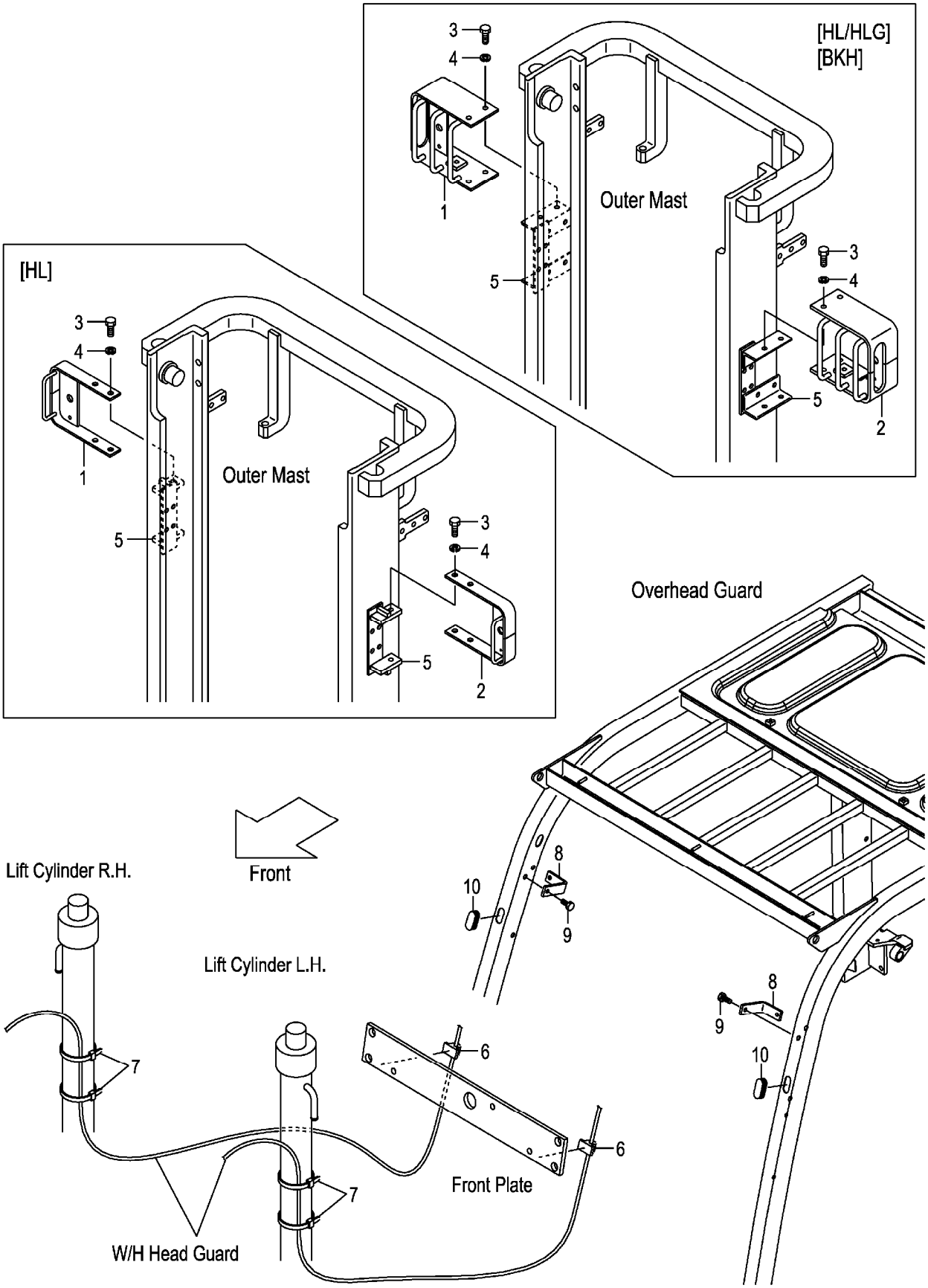

A:FG20C13 FG20T13 FG25C13 FG25T13 C:FD20C13 FD20T13 FD25C13 FD25T13 (F7025130)
B:FG20C3 FG20T3 FG25C3 FG25T3 FG20W3 FG25W3 D:FD20C3 FD20T3 FD25C3 FD25T3 FD20W3 FD25W3

| Item No | Part No. | Mark | Description | Req'd | Remarks : Serial No. |
|---|---|---|---|---|---|
| 1 | 534A9-22001 | | BRACKET,HEAD-LAMP,RH ﾌﾞﾗｹｯﾄ | 1 | [HL] |
| - | 534A4-22001 | | BRACKET,HEAD-LAMP,RH ﾌﾞﾗｹｯﾄ | 1 | [HL/HLG][BKH] |
| 2 | 534A9-22011 | | BRACKET,HEAD-LAMP,LH ﾌﾞﾗｹｯﾄ | 1 | [HL] |
| - | 534A4-22011 | | BRACKET,HEAD-LAMP,LH ﾌﾞﾗｹｯﾄ | 1 | [HL/HLG][BKH] |
| 3 | 01100-12020 | | BOLT ﾎﾞﾙﾄ | 4 | [HL][HL/HLG][BKH] |
| 4 | 02010-00012 | | WASHER ﾜｯｼｬ | 4 | [HL][HL/HLG][BKH] |
| 5 | 641B0-12701 | | BRACKET,HL ﾌﾞﾗｹｯﾄ | 2 | [HL] |
| - | 641B0-12751 | | BRACKET,BKH ﾌﾞﾗｹｯﾄ | 2 | [HL/HLG][BKH] |
| 6 | 27732-42221 | | CLAMP,HARNESS ｸﾗﾝﾌﾟ | 2 | [HL][HL/HLG][BKH] |
| 7 | 04913-11380 | | BAND,INSHULOCK ﾊﾞﾝﾄﾞ | 4 | [HL][HL/HLG][BKH] |
| 8 | 22N55-12571 | | BRACKET,BACK-MIRROR ﾌﾞﾗｹｯﾄ | 2 | [HL][HL/HLG][BKH] |
| 9 | 514A5-12021 | | BOLT ﾎﾞﾙﾄ | 2 | [HL][HL/HLG][BKH] |
| 10 | 27662-63711 | | GROMMET ｸﾞﾛﾒｯﾄ | 2 | [HL][HL/HLG][BKH] |

# FIG.126 REAR LAMP COVER

(F7025140) ﾘﾔｰﾗﾝﾌﾟｶﾊﾞｰ

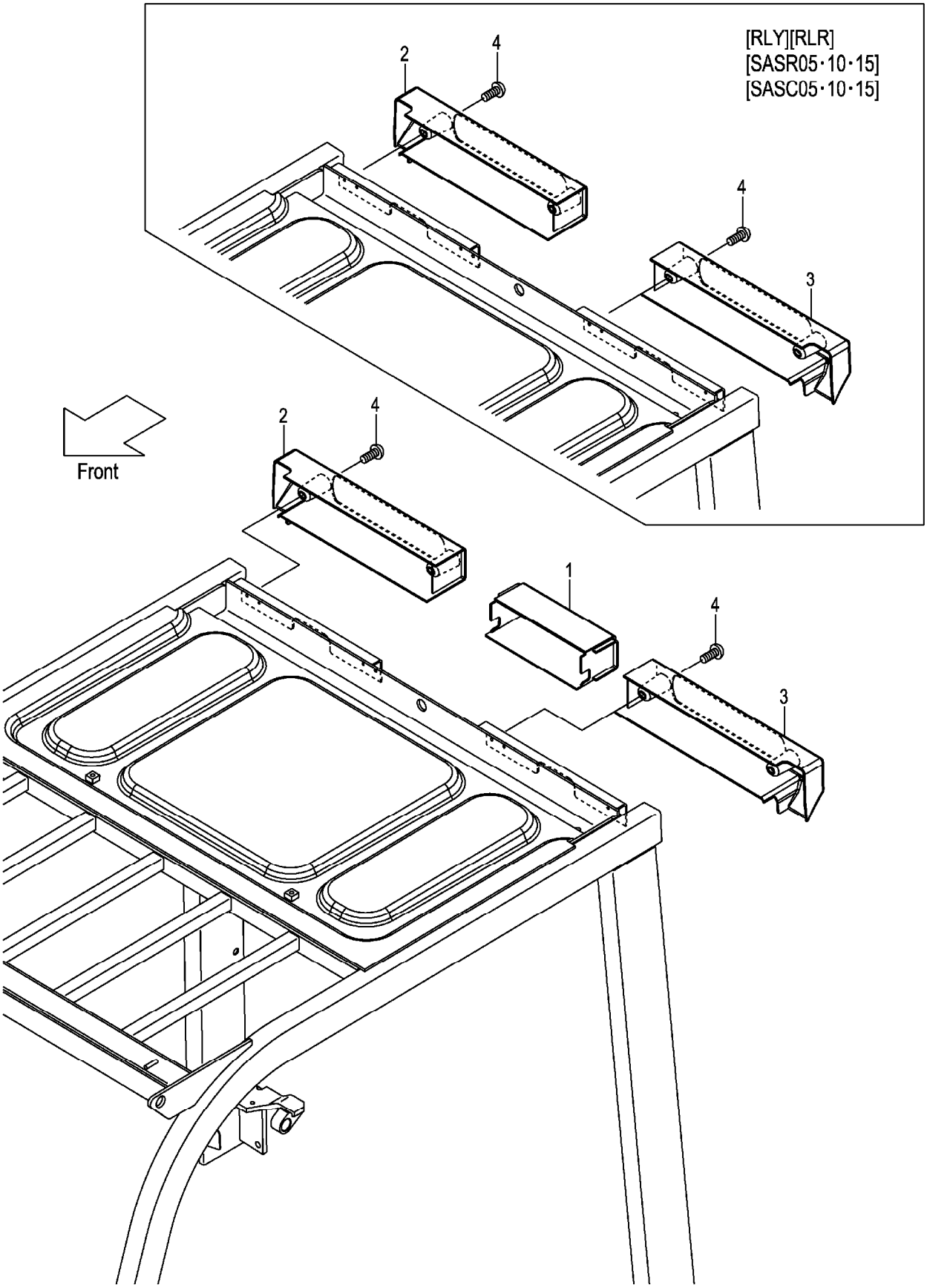

A:FG20C13 FG20T13 FG25C13 FG25T13 D:FD20C13 FD20T13 FD25C13 FD25T13
B:FG20C3 FG20T3 FG25C3 FG25T3 E:FD20C3 FD20T3 FD25C3 FD25T3
C:FG20W3 FG25W3 F:FD20W3 FD25W3

**FIG.126**
(F7025140)

| Item No | Part No. | Mark | Description | | Req'd | Remarks : Serial No. |
|---|---|---|---|---|---|---|
| 1 | 22N55-12701 | | COVER,REAR-LAMP | ｶﾊﾞｰ | 1 | (WITHOUT RLY,RLR,SASR,SASC) |
| - | 52N55-00511 | | COVER,REAR-LAMP | ｶﾊﾞｰ | 1 | [HGH060][HGH100] |
| - | 52N55-00521 | | COVER,REAR-LAMP | ｶﾊﾞｰ | 1 | [HGH150][HGH200] |
| - | 52N55-00511 | | COVER,REAR-LAMP | ｶﾊﾞｰ | 1 | B,E<br>[EXC][EXE][EXN] |
| - | 52N55-00511 | | COVER,REAR-LAMP | ｶﾊﾞｰ | 1 | B,E<br>[HGH100/EXC][HGH100/EXE]<br>[HGH100/EXN] |
| - | 52N55-00521 | | COVER,REAR-LAMP | ｶﾊﾞｰ | 1 | B,E<br>[HGH150/EXC][HGH150/EXE]<br>[HGH150/EXN] |
| - | 52N55-00521 | | COVER,REAR-LAMP | ｶﾊﾞｰ | 1 | B,E<br>[HGH200/EXC][HGH200/EXE]<br>[HGH200/EXN] |
| 2 | 22N55-12711 | | COVER,REAR-LAMP,RH | ｶﾊﾞｰ | 1 | (WITHOUT RLY/SCB,RLR/SCB) |
| 3 | 22N55-12721 | | COVER,REAR-LAMP,LH | ｶﾊﾞｰ | 1 | (WITHOUT RLY/SCB,RLR/SCB) |
| 4 | 214A6-42252 | | SCREW | ｽｸﾘｭ | 4 | (WITHOUT RLY/SCB,RLR/SCB) |

# FIG.127 REAR LAMP COVER [RRE]

(F7025150) ﾘﾔｰﾗﾝﾌﾟｶﾊﾞｰ

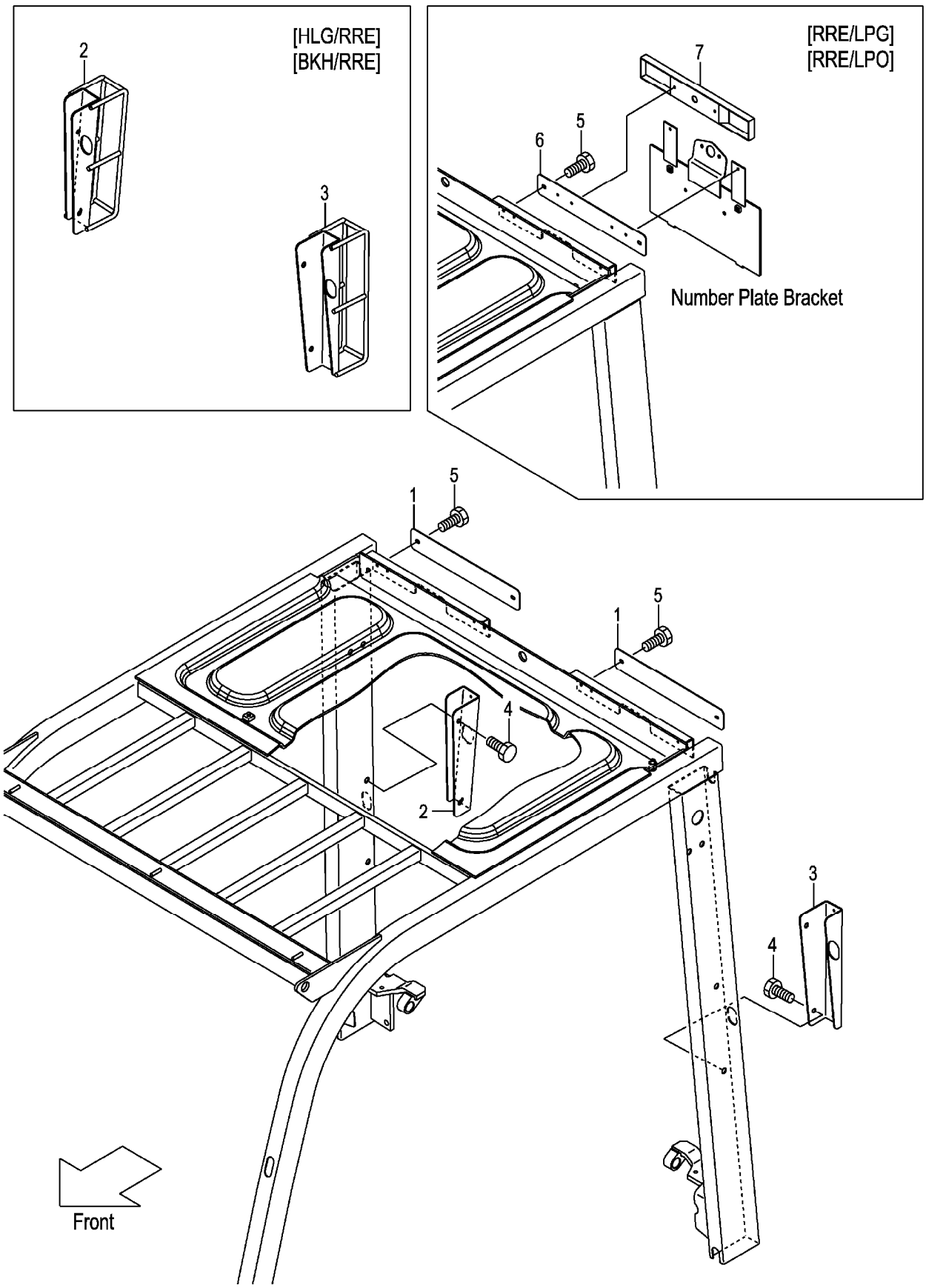

**FIG.127**

A:FG20C13 FG20T13 FG25C13 FG25T13 C:FD20C13 FD20T13 FD25C13 FD25T13 (F7025150)
B:FG20C3 FG20T3 FG25C3 FG25T3 FG20W3 FG25W3 D:FD20C3 FD20T3 FD25C3 FD25T3 FD20W3 FD25W3

| Item No | Part No. | Mark | Description | | Req'd | Remarks : Serial No. |
|---|---|---|---|---|---|---|
| 1 | 52N59-92051 | | PLATE | ﾌﾟﾚｰﾄ | 2 | [RRE] |
| - | 52N59-92051 | | PLATE | ﾌﾟﾚｰﾄ | 1 | [RRE/LPG][RRE/LPO] |
| 2 | 52N59-92021 | | BRACKET,REAR-LAMP,RH | ﾌﾞﾗｹｯﾄ | 1 | [RRE] |
| - | 52N55-12001 | | BRACKET,REAR-LAMP,RH | ﾌﾞﾗｹｯﾄ | 1 | [HLG/RRE][BKH/RRE] |
| 3 | 52N59-92031 | | BRACKET,REAR-LAMP,LH | ﾌﾞﾗｹｯﾄ | 1 | [RRE] |
| - | 52N55-12011 | | BRACKET,REAR-LAMP,LH | ﾌﾞﾗｹｯﾄ | 1 | [HLG/RRE][BKH/RRE] |
| 4 | 514A5-12021 | | BOLT | ﾎﾞﾙﾄ | 4 | [RRE] |
| 5 | 01031-06065 | | BOLT | ﾎﾞﾙﾄ | 4 | [RRE] |
| 6 | 52N59-92161 | | PLATE | ﾌﾟﾚｰﾄ | 1 | [RRE/LPG][RRE/LPO] |
| 7 | 52N59-92121 | | COVER,W/A | ｶﾊﾞｰ | 1 | [RRE/LPG][RRE/LPO] |

# FIG.128 HEAD GUARD PARTS

(F70251A0) ﾍｯﾄﾞｶﾞｰﾄﾞﾊﾟｰﾂ

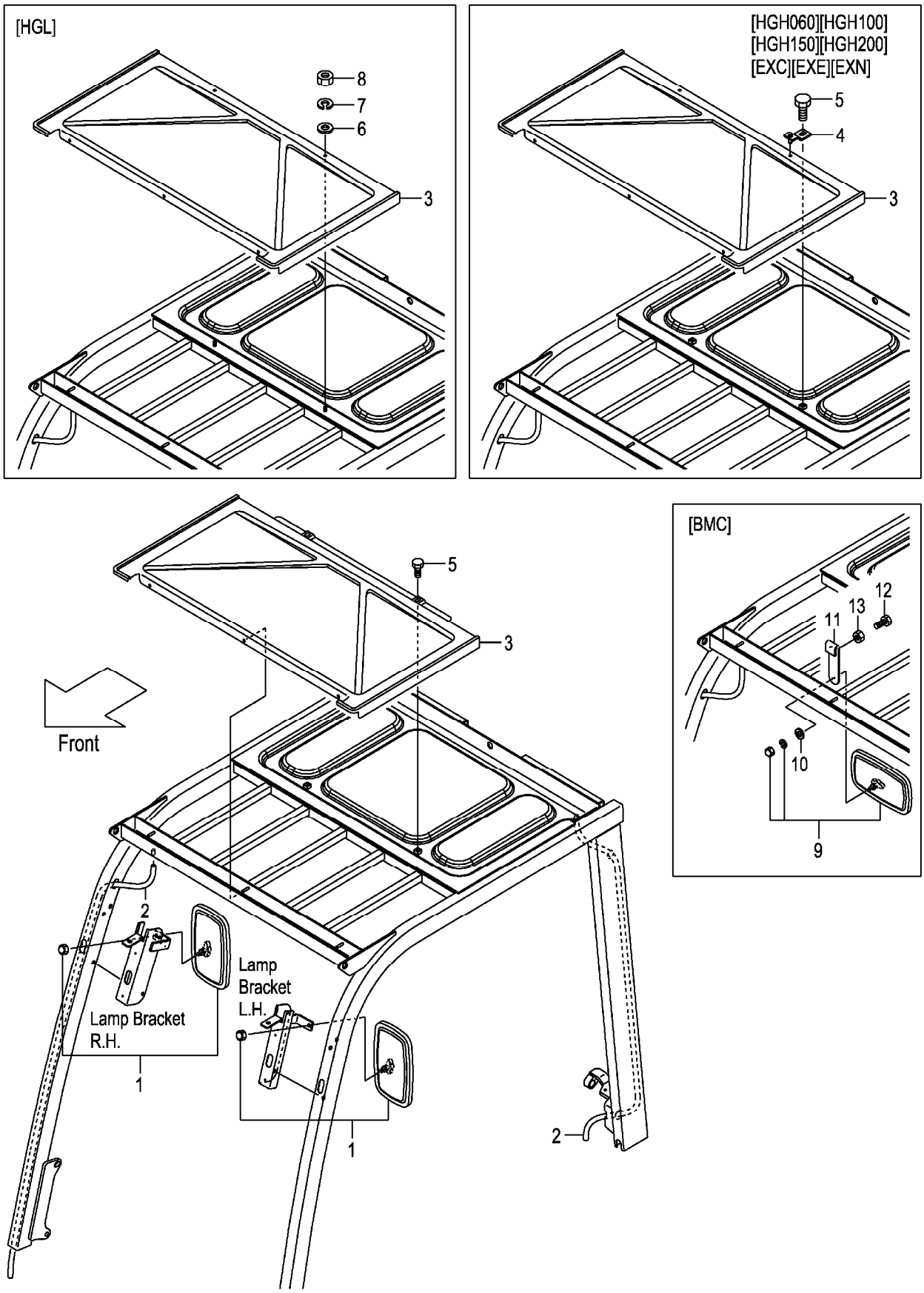

A:FG20C13 FG20T13 FG25C13 FG25T13 D:FD20C13 FD20T13 FD25C13 FD25T13
B:FG20C3 FG20T3 FG25C3 FG25T3 E:FD20C3 FD20T3 FD25C3 FD25T3
C:FG20W3 FG25W3 F:FD20W3 FD25W3

**FIG.128**
(F70251A0)

| Item No | Part No. | Mark | Description | | Req'd | Remarks : Serial No. |
|---|---|---|---|---|---|---|
| 1 | 239A9-92001 | | MIRROR | ﾐﾗｰ | 2 | |
| 2 | 534A5-00401 | | HOSE,VINYL | ﾎｰｽ | 2 | (WITHOUT SCB001,SCBCR) |
| - | 534A5-00411 | | HOSE,VINYL | ﾎｰｽ | 2 | [HGH060][HGH100] |
| - | 577H5-13051 | | HOSE,VINYL | ﾎｰｽ | 2 | [HGH150][HGH200] |
| - | 516M5-12301 | | HOSE,VINYL | ﾎｰｽ | 2 | [HGL] |
| - | 534A5-00411 | | HOSE,VINYL | ﾎｰｽ | 2 | B,E<br>[EXC][EXE][EXN] |
| - | 534A5-00411 | | HOSE,VINYL | ﾎｰｽ | 2 | B,E<br>[HGH100/EXC][HGH100/EXE]<br>[HGH100/EXN] |
| - | 577H5-13051 | | HOSE,VINYL | ﾎｰｽ | 2 | B,E<br>[HGH150/EXC][HGH150/EXE]<br>[HGH150/EXN] |
| - | 577H5-13051 | | HOSE,VINYL | ﾎｰｽ | 2 | B,E<br>[HGH200/EXC][HGH200/EXE]<br>[HGH200/EXN] |
| 3 | 22N55-12901 | | CANVAS | ｷｬﾝﾊﾞｽ | 1 | |
| - | 52N55-00501 | | CANVAS | ｷｬﾝﾊﾞｽ | 1 | [HGH060][HGH100][HGH150]<br>[HGH200][HGL] |
| - | 52N55-00501 | | CANVAS | ｷｬﾝﾊﾞｽ | 1 | B,E<br>[EXC][EXE][EXN] |
| 4 | 52N55-00551 | | BRACKET | ﾌﾞﾗｹｯﾄ | 2 | [HGH060][HGH100][HGH150]<br>[HGH200] |
| - | 52N55-00551 | | BRACKET | ﾌﾞﾗｹｯﾄ | 2 | B,E<br>[EXC][EXE][EXN] |
| 5 | 01185-08016 | | BOLT | ﾎﾞﾙﾄ | 2 | (WITHOUT HGL) |
| 6 | 02000-00006 | | WASHER | ﾜｯｼｬ | 2 | [HGL] |
| 7 | 02010-00006 | | WASHER | ﾜｯｼｬ | 2 | [HGL] |
| 8 | 01400-00006 | | NUT | ﾅｯﾄ | 2 | [HGL] |
| 9 | 239A9-92001 | | MIRROR | ﾐﾗｰ | 1 | [BMC] |
| 10 | 222A9-32011 | | WASHER | ﾜｯｼｬ | 1 | [BMC] |
| 11 | 539A9-32001 | | BRACKET,BACK-MIRROR | ﾌﾞﾗｹｯﾄ | 1 | [BMC] |
| 12 | 01100-08025 | | BOLT | ﾎﾞﾙﾄ | 2 | [BMC] |
| 13 | 01402-00008 | | NUT | ﾅｯﾄ | 2 | [BMC] |

# FIG.129 ACCEL PEDAL (GASOLINE)

(F7025210) アクセルペダル

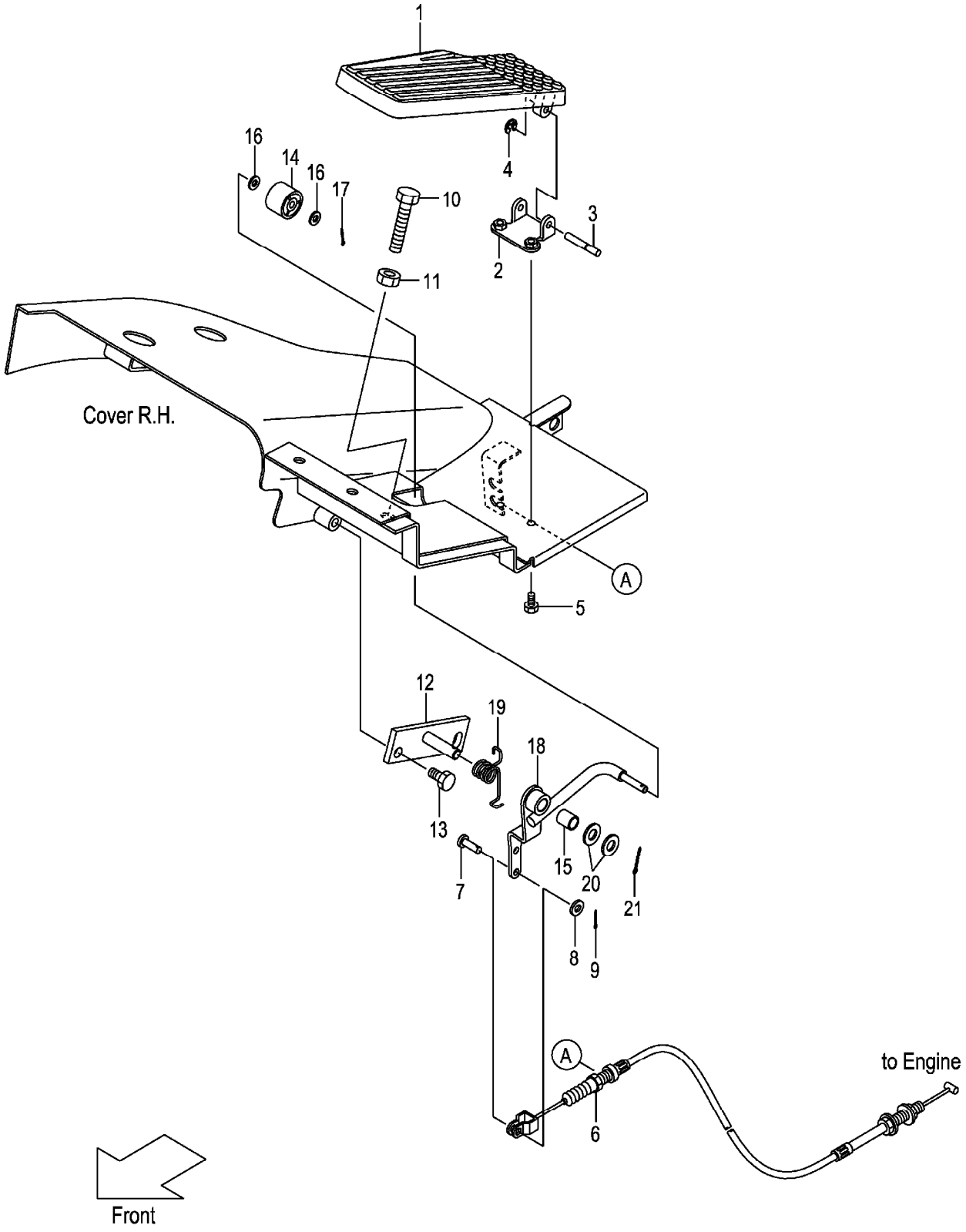

A:FG20C13 FG20T13 FG25C13 FG25T13
B:FG20C3 FG20T3 FG25C3 FG25T3 FG20W3 FG25W3

| Item No | Part No. | Mark | Description | | Req'd | Remarks : Serial No. |
|---|---|---|---|---|---|---|
| A1 | 22N55-20211 | | PEDAL-ASSY,ACCEL | ｱｸｾﾙﾍﾟﾀﾞﾙｱｯｾﾝ | 1 | INC.1-4 |
| 1 | NO PART NO. | # | PEDAL | ﾍﾟﾀﾞﾙ | 1 | |
| 2 | NO PART NO. | # | SUPPORT | ｻﾎﾟｰﾄ | 1 | |
| 3 | 22N55-22121 | | SHAFT | ｼｬﾌﾄ | 1 | |
| 4 | 22N55-22131 | | E-RING | Eﾘﾝｸﾞ | 1 | |
| 5 | 01183-06012 | | BOLT | ﾎﾞﾙﾄ | 2 | |
| 6 | 22B55-22011 | | CABLE,ACCEL | ｹｰﾌﾞﾙ | 1 | |
| 7 | 02262-06015 | | PIN,CLEVIS | ﾋﾟﾝ | 1 | |
| 8 | 02000-00006 | | WASHER | ﾜｯｼｬ | 1 | |
| 9 | 02200-16015 | | PIN,COTTER | ﾋﾟﾝ | 1 | |
| 10 | 01100-10025 | | BOLT | ﾎﾞﾙﾄ | 1 | |
| 11 | 01400-00010 | | NUT | ﾅｯﾄ | 1 | |
| 12 | 22N55-22011 | | BRACKET,ACCEL-LINK | ﾌﾞﾗｹｯﾄ | 1 | |
| 13 | 01185-08016 | | BOLT | ﾎﾞﾙﾄ | 2 | |
| A2 | 22N55-20201 | | LINK-ASSY,ACCEL | ｱｸｾﾙﾘﾝｸｱｯｾﾝ | 1 | INC.14-18 |
| 14 | 214A5-22001 | | ROLLER | ﾛｰﾗ | 1 | |
| 15 | 23655-22101 | | BUSHING | ﾌﾞｯｼﾝｸﾞ | 1 | |
| 16 | 02000-00006 | | WASHER | ﾜｯｼｬ | 2 | |
| 17 | 02200-16010 | | PIN,COTTER | ﾋﾟﾝ | 1 | |
| 18 | NO PART NO. | # | LINK,ACCEL | ﾘﾝｸ | 1 | |
| 19 | 22N55-22031 | | SPRING | ｽﾌﾟﾘﾝｸﾞ | 1 | |
| 20 | 02000-00010 | | WASHER | ﾜｯｼｬ | 2 | |
| 21 | 02200-03020 | | PIN,COTTER | ﾋﾟﾝ | 1 | |

# FIG.130 ACCEL PEDAL (DIESEL)

(F7025220) アクセルペダル

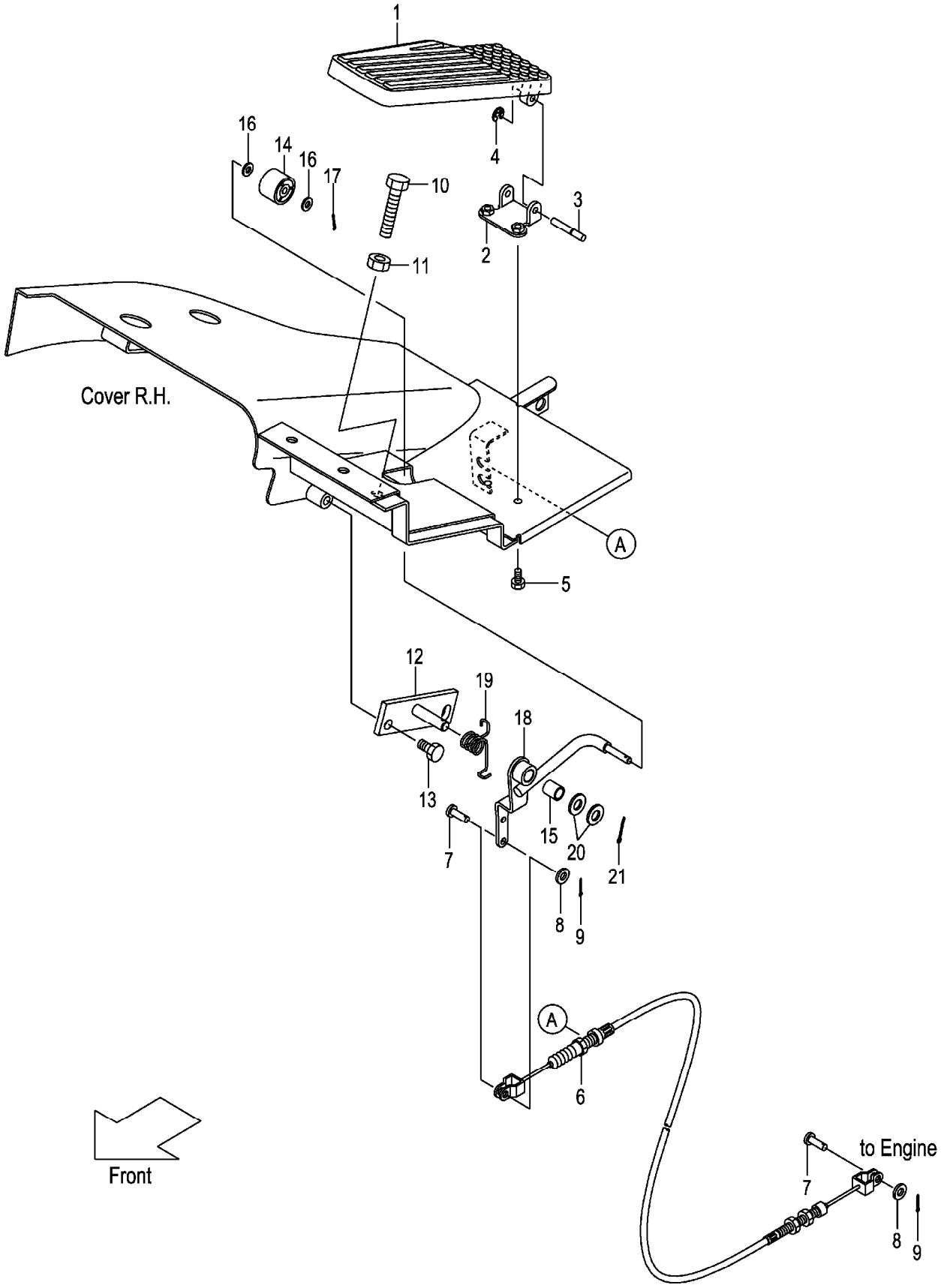

A:FD20C13 FD20T13 FD25C13 FD25T13
B:FD20C3 FD20T3 FD25C3 FD25T3 FD20W3 FD25W3

| Item No | Part No. | Mark | Description | | Req'd | Remarks : Serial No. |
|---|---|---|---|---|---|---|
| A1 | 22N55-20211 | | PEDAL-ASSY,ACCEL | ｱｸｾﾙﾍﾟﾀﾞﾙｱｯｾﾝ | 1 | INC.1-4 |
| 1 | NO PART NO. | # | PEDAL | ﾍﾟﾀﾞﾙ | 1 | |
| 2 | NO PART NO. | # | SUPPORT | ｻﾎﾟｰﾄ | 1 | |
| 3 | 22N55-22121 | | SHAFT | ｼｬﾌﾄ | 1 | |
| 4 | 22N55-22131 | | E-RING | Eﾘﾝｸﾞ | 1 | |
| 5 | 01183-06012 | | BOLT | ﾎﾞﾙﾄ | 2 | |
| 6 | 22N55-22201 | | CABLE,ACCEL | ｹｰﾌﾞﾙ | 1 | |
| 7 | 02262-06015 | | PIN,CLEVIS | ﾋﾟﾝ | 2 | |
| 8 | 02000-00006 | | WASHER | ﾜｯｼｬ | 2 | |
| 9 | 02200-16015 | | PIN,COTTER | ﾋﾟﾝ | 2 | |
| 10 | 01120-10050 | | BOLT | ﾎﾞﾙﾄ | 1 | |
| 11 | 01400-00010 | | NUT | ﾅｯﾄ | 1 | |
| 12 | 22N55-22011 | | BRACKET,ACCEL-LINK | ﾌﾞﾗｹｯﾄ | 1 | |
| 13 | 01185-08016 | | BOLT | ﾎﾞﾙﾄ | 2 | |
| A2 | 22N55-20201 | | LINK-ASSY,ACCEL | ｱｸｾﾙﾘﾝｸｱｯｾﾝ | 1 | INC.14-18 |
| 14 | 214A5-22001 | | ROLLER | ﾛｰﾗ | 1 | |
| 15 | 23655-22101 | | BUSHING | ﾌﾞｯｼﾝｸﾞ | 1 | |
| 16 | 02000-00006 | | WASHER | ﾜｯｼｬ | 2 | |
| 17 | 02200-16010 | | PIN,COTTER | ﾋﾟﾝ | 1 | |
| 18 | NO PART NO. | # | LINK,ACCEL | ﾘﾝｸ | 1 | |
| 19 | 22N55-22031 | | SPRING | ｽﾌﾟﾘﾝｸﾞ | 1 | |
| 20 | 02000-00010 | | WASHER | ﾜｯｼｬ | 2 | |
| 21 | 02200-03020 | | PIN,COTTER | ﾋﾟﾝ | 1 | |

# FIG.131 FOOT PEDAL (CLUTCH)

(F7025410) フットペダル

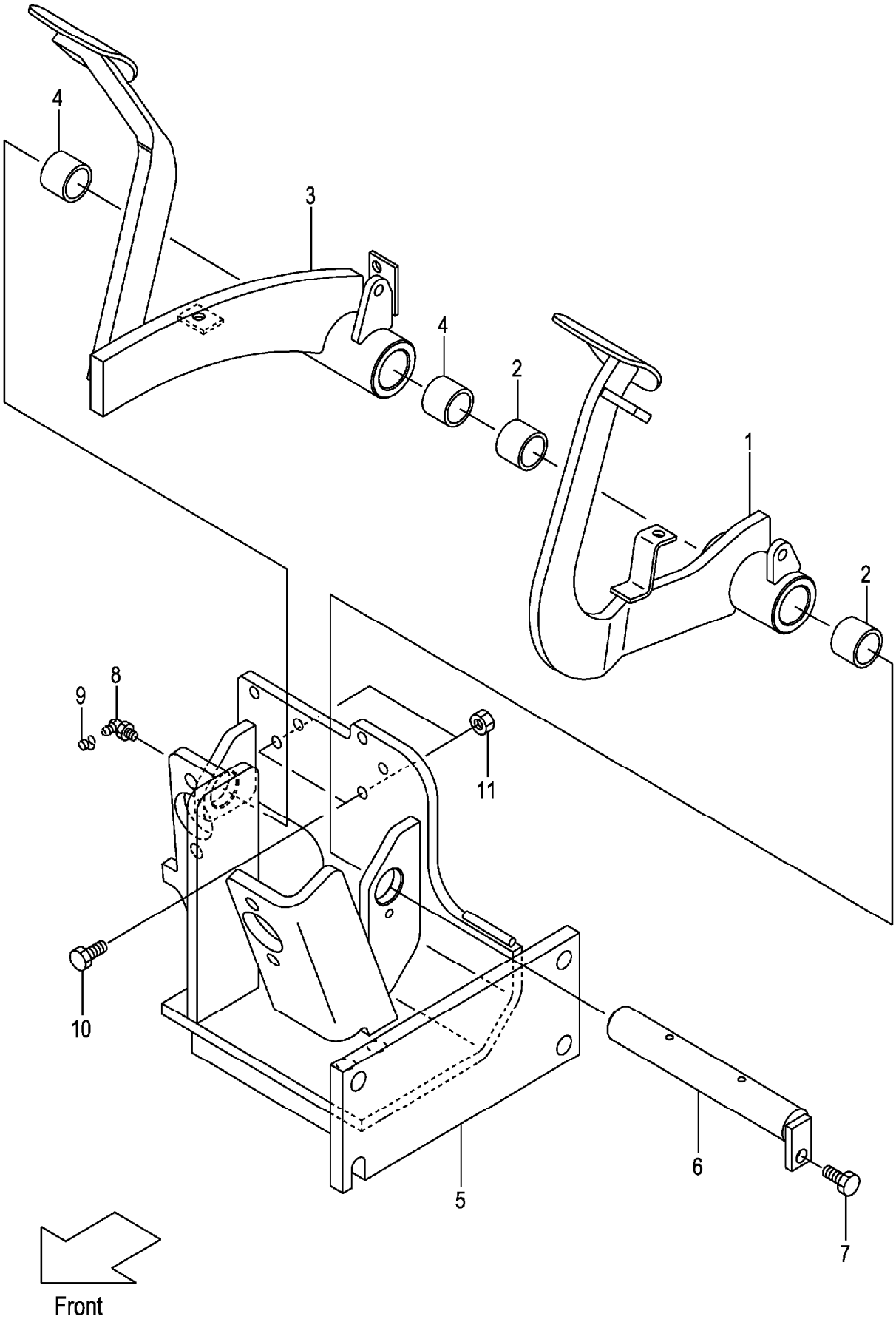

A:FG20C13 FG25C13 C:FD20C13 FD25C13
B:FG20C3 FG25C3 D:FD20C3 FD25C3

| Item No | Part No. | Mark | Description | | Req'd | Remarks : Serial No. |
|---|---|---|---|---|---|---|
| A1 | 22N45-30303 | | PEDAL-ASSY,CLUTCH | ｸﾗｯﾁﾍﾟﾀﾞﾙｱｯｾﾝ | 1 | INC.1,2 |
| 1 | NO PART NO. | # | PEDAL,CLUTCH | ﾍﾟﾀﾞﾙ | 1 | |
| 2 | 23655-42421 | | BUSHING,PEDAL | ﾌﾞｯｼﾝｸﾞ | 2 | |
| A2 | 22N45-40302 | | PEDAL-ASSY,BRAKE | ﾌﾞﾚｰｷﾍﾟﾀﾞﾙｱｯｾﾝ | 1 | INC.3,4 |
| 3 | NO PART NO. | # | PEDAL,BRAKE | ﾍﾟﾀﾞﾙ | 1 | |
| 4 | 23655-42421 | | BUSHING,PEDAL | ﾌﾞｯｼﾝｸﾞ | 2 | |
| 5 | 22N45-40202 | | BRACKET,PEDAL | ﾌﾞﾗｹｯﾄ | 1 | |
| 6 | 22N45-42101 | | SHAFT,PEDAL | ｼｬﾌﾄ | 1 | |
| 7 | 01183-08016 | | BOLT | ﾎﾞﾙﾄ | 1 | |
| 8 | 04901-00190 | | FITTING | ﾌｨｯﾃｨﾝｸﾞ | 1 | |
| 9 | 22199-12401 | | CAP,NIPPLE | ｷｬｯﾌﾟ | 1 | |
| 10 | 01100-10025 | | BOLT | ﾎﾞﾙﾄ | 2 | |
| 11 | 01402-00010 | | NUT | ﾅｯﾄ | 2 | |

# FIG.132 FOOT PEDAL (TOR-CON)

(F7025420) ﾌｯﾄﾍﾟﾀﾞﾙ

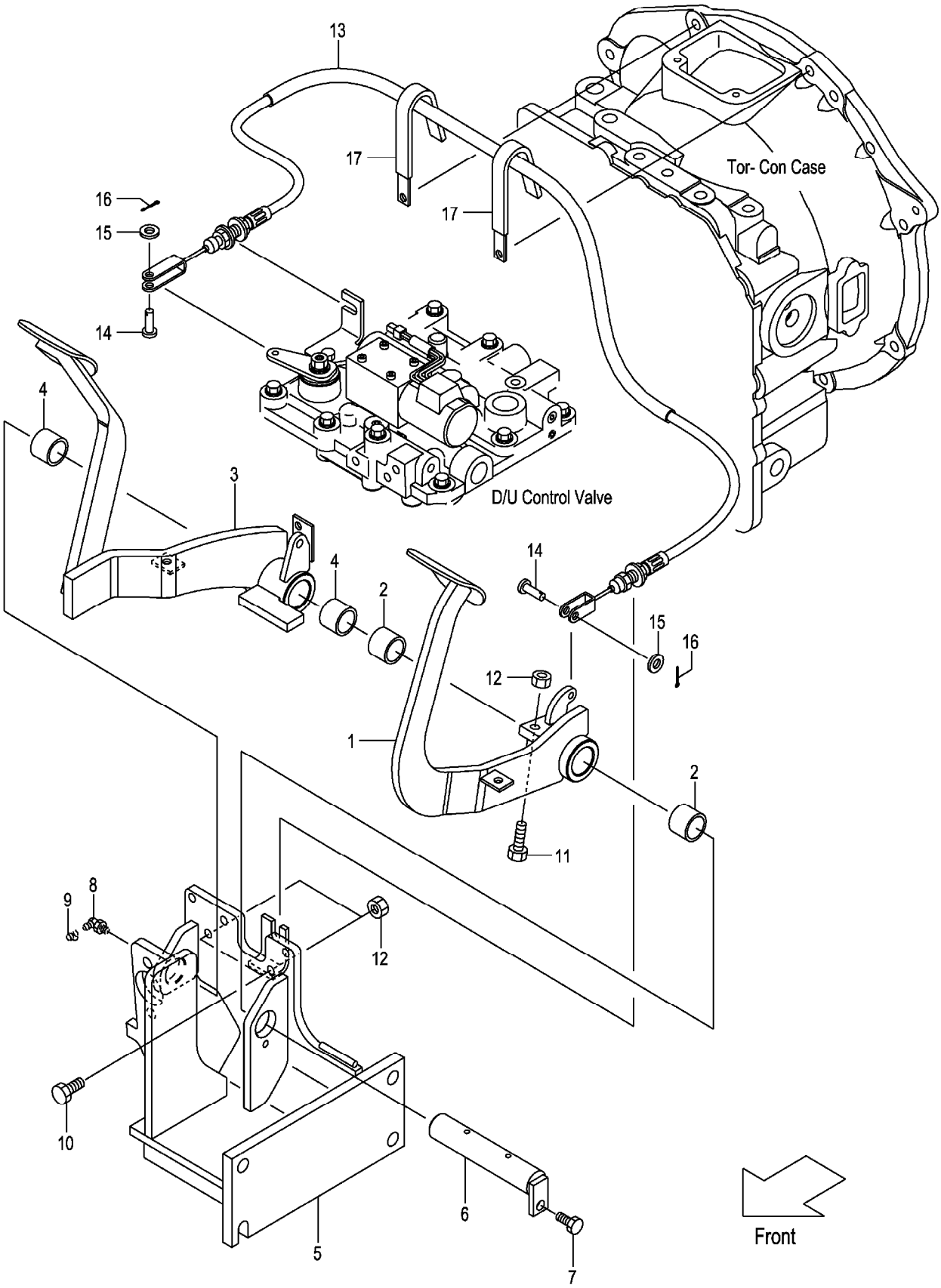

A:FG20T13 FG25T13 C:FD20T13 FD25T13
B:FG20T3 FG25T3 D:FD20T3 FD25T3

| Item No | Part No. | Mark | Description | | Req'd | Remarks : Serial No. |
|---|---|---|---|---|---|---|
| A1 | 22N55-40402 | | PEDAL-ASSY,INCHING | ｲﾝﾁﾝｸﾞﾍﾟﾀﾞﾙｱｯｾﾝ | 1 | INC.1,2 |
| 1 | NO PART NO. | # | PEDAL,INCHING | ﾍﾟﾀﾞﾙ | 1 | |
| 2 | 23655-42421 | | BUSHING,PEDAL | ﾌﾞｯｼﾝｸﾞ | 2 | |
| A2 | 22N55-40302 | | PEDAL-ASSY,BRAKE | ﾌﾞﾚｰｷﾍﾟﾀﾞﾙｱｯｾﾝ | 1 | INC.3,4 |
| 3 | NO PART NO. | # | PEDAL,BRAKE | ﾍﾟﾀﾞﾙ | 1 | |
| 4 | 23655-42421 | | BUSHING,PEDAL | ﾌﾞｯｼﾝｸﾞ | 2 | |
| 5 | 22N55-40202 | | BRACKET,PEDAL | ﾌﾞﾗｹｯﾄ | 1 | |
| 6 | 22N55-42101 | | SHAFT,PEDAL | ｼｬﾌﾄ | 1 | |
| 7 | 01183-08016 | | BOLT | ﾎﾞﾙﾄ | 1 | |
| 8 | 04901-00190 | | FITTING | ﾌｨｯﾃｨﾝｸﾞ | 1 | |
| 9 | 22199-12401 | | CAP,NIPPLE | ｷｬｯﾌﾟ | 1 | |
| 10 | 01100-10025 | | BOLT | ﾎﾞﾙﾄ | 2 | |
| 11 | 01100-10030 | | BOLT | ﾎﾞﾙﾄ | 1 | A:1-114<br>B:1-145<br>C:1-111<br>D:1-234 |
| - | 01120-10040 | | BOLT | ﾎﾞﾙﾄ | 1 | A:115-<br>B:146-<br>C:112-<br>D:235- |
| 12 | 01402-00010 | | NUT | ﾅｯﾄ | 3 | |
| 13 | 22N55-42601 | | CABLE,INCHING | ｹｰﾌﾞﾙ | 1 | |
| 14 | 02262-06020 | | PIN,CLEVIS | ﾋﾟﾝ | 2 | |
| 15 | 02000-00006 | | WASHER | ﾜｯｼｬ | 2 | |
| 16 | 02200-16015 | | PIN,COTTER | ﾋﾟﾝ | 2 | |
| 17 | 214A2-42331 | | CLIP | ｸﾘｯﾌﾟ | 2 | A,C:111-<br>B:122-<br>D:181- |

# FIG.133 FOOT PEDAL (OIL CLUTCH)

(F7025430) ﾌｯﾄﾍﾟﾀﾞﾙ

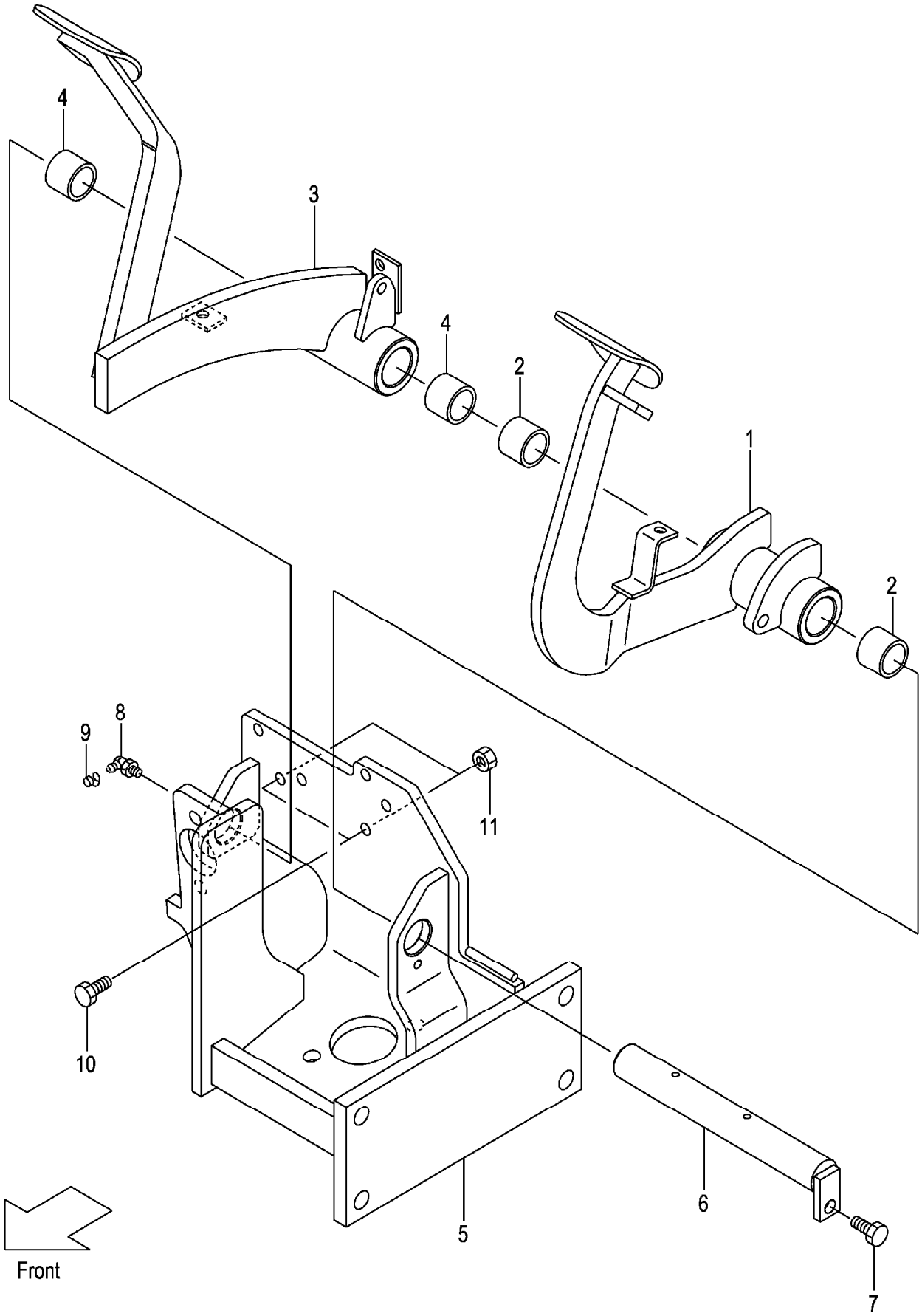

A:FG20W3 FG25W3
B:FD20W3 FD25W3

| Item No | Part No. | Mark | Description | | Req'd | Remarks : Serial No. |
|---|---|---|---|---|---|---|
| A1 | 22P45-30302 | | PEDAL-ASSY,CLUTCH | ｸﾗｯﾁﾍﾟﾀﾞﾙｱｯｾﾝ | 1 | INC.1,2 |
| 1 | NO PART NO. | # | PEDAL,CLUTCH | ﾍﾟﾀﾞﾙ | 1 | |
| 2 | 23655-42421 | | BUSHING,PEDAL | ﾌﾞｯｼﾝｸﾞ | 2 | |
| A2 | 22N45-40302 | | PEDAL-ASSY,BRAKE | ﾌﾞﾚｰｷﾍﾟﾀﾞﾙｱｯｾﾝ | 1 | INC.3,4 |
| 3 | NO PART NO. | # | PEDAL,BRAKE | ﾍﾟﾀﾞﾙ | 1 | |
| 4 | 23655-42421 | | BUSHING,PEDAL | ﾌﾞｯｼﾝｸﾞ | 2 | |
| 5 | 22P45-40201 | | BRACKET,PEDAL | ﾌﾞﾗｹｯﾄ | 1 | |
| 6 | 22P45-42101 | | SHAFT,PEDAL | ｼｬﾌﾄ | 1 | |
| 7 | 01183-08016 | | BOLT | ﾎﾞﾙﾄ | 1 | |
| 8 | 04901-00190 | | FITTING | ﾌｨｯﾃｨﾝｸﾞ | 1 | |
| 9 | 22199-12401 | | CAP,NIPPLE | ｷｬｯﾌﾟ | 1 | |
| 10 | 01100-10025 | | BOLT | ﾎﾞﾙﾄ | 2 | |
| 11 | 01402-00010 | | NUT | ﾅｯﾄ | 2 | |

# FIG.134 FOOT PEDAL CYLINDER (CLUTCH)

(F7025440) ﾌｯﾄﾍﾟﾀﾞﾙｼﾘﾝﾀﾞ

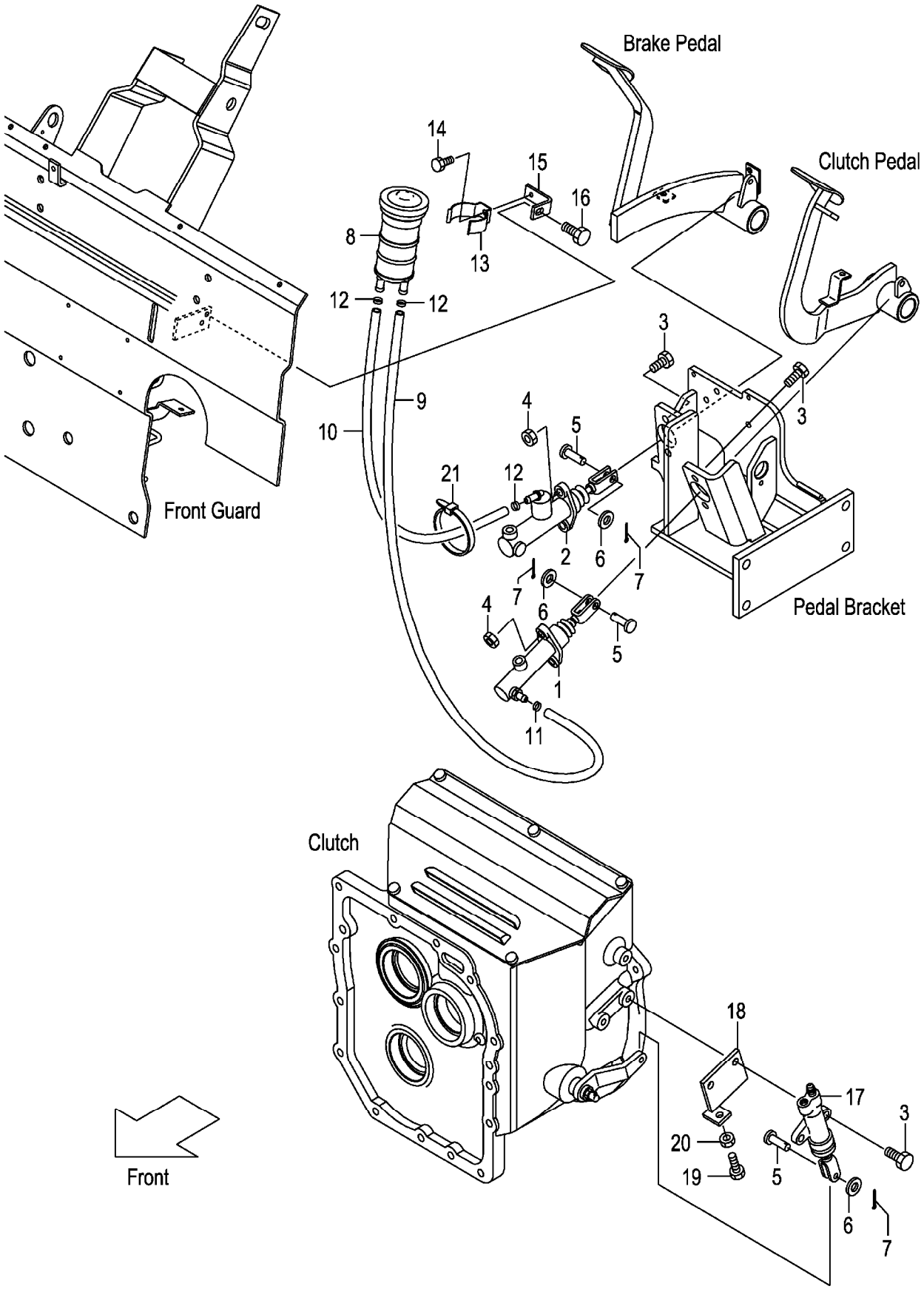

A:FG20C13 FG25C13 C:FD20C13 FD25C13
B:FG20C3 FG25C3 D:FD20C3 FD25C3

| Item No | Part No. | Mark | Description | | Req'd | Remarks : Serial No. |
|---|---|---|---|---|---|---|
| 1 | 239A5-40501 | | CYL,CLUTCH-MASTER | ｼﾘﾝﾀﾞ | 1 | SEE FIG.141 |
| 2 | 27045-40302 | | CYL,BRAKE-MASTER | ｼﾘﾝﾀﾞ | 1 | SEE FIG.143 |
| 3 | 01184-10030 | | BOLT | ﾎﾞﾙﾄ | 6 | |
| 4 | 01400-00010 | | NUT | ﾅｯﾄ | 4 | |
| 5 | 02262-08025 | | PIN,CLEVIS | ﾋﾟﾝ | 3 | |
| 6 | 02000-00008 | | WASHER | ﾜｯｼｬ | 3 | |
| 7 | 02200-02020 | | PIN,COTTER | ﾋﾟﾝ | 3 | |
| 8 | 216G5-42011 | | TANK,RESERVE | ﾀﾝｸ | 1 | |
| 9 | 22N45-32151 | | HOSE,RESERVE | ﾎｰｽ | 1 | |
| 10 | 22N45-32161 | | HOSE,RESERVE | ﾎｰｽ | 1 | |
| 11 | 25595-42491 | | BAND,HOSE | ﾊﾞﾝﾄﾞ | 1 | |
| 12 | 25785-43091 | | BAND,HOSE | ﾊﾞﾝﾄﾞ | 3 | |
| 13 | 224G5-42061 | | CLIP,RESERVE-TANK | ｸﾘｯﾌﾟ | 1 | |
| 14 | 01183-06010 | | BOLT | ﾎﾞﾙﾄ | 1 | |
| 15 | 22N55-42141 | | BRACKET | ﾌﾞﾗｹｯﾄ | 1 | |
| 16 | 01185-08016 | | BOLT | ﾎﾞﾙﾄ | 1 | |
| 17 | 214A5-32312 | | CYL,CLUTCH-RELEASE | ｼﾘﾝﾀﾞ | 1 | SEE FIG.144 |
| 18 | 22N45-32201 | | BRACKET,RELEASE-CYL | ﾌﾞﾗｹｯﾄ | 1 | |
| 19 | 01100-10025 | | BOLT | ﾎﾞﾙﾄ | 1 | |
| 20 | 01402-00010 | | NUT | ﾅｯﾄ | 1 | |
| 21 | 04913-11100 | | BAND | ﾊﾞﾝﾄﾞ | 1 | |

# FIG.135 FOOT PEDAL CYLINDER (TOR-CON)

(F7025450) ﾌｯﾄﾍﾟﾀﾞﾙｼﾘﾝﾀﾞ

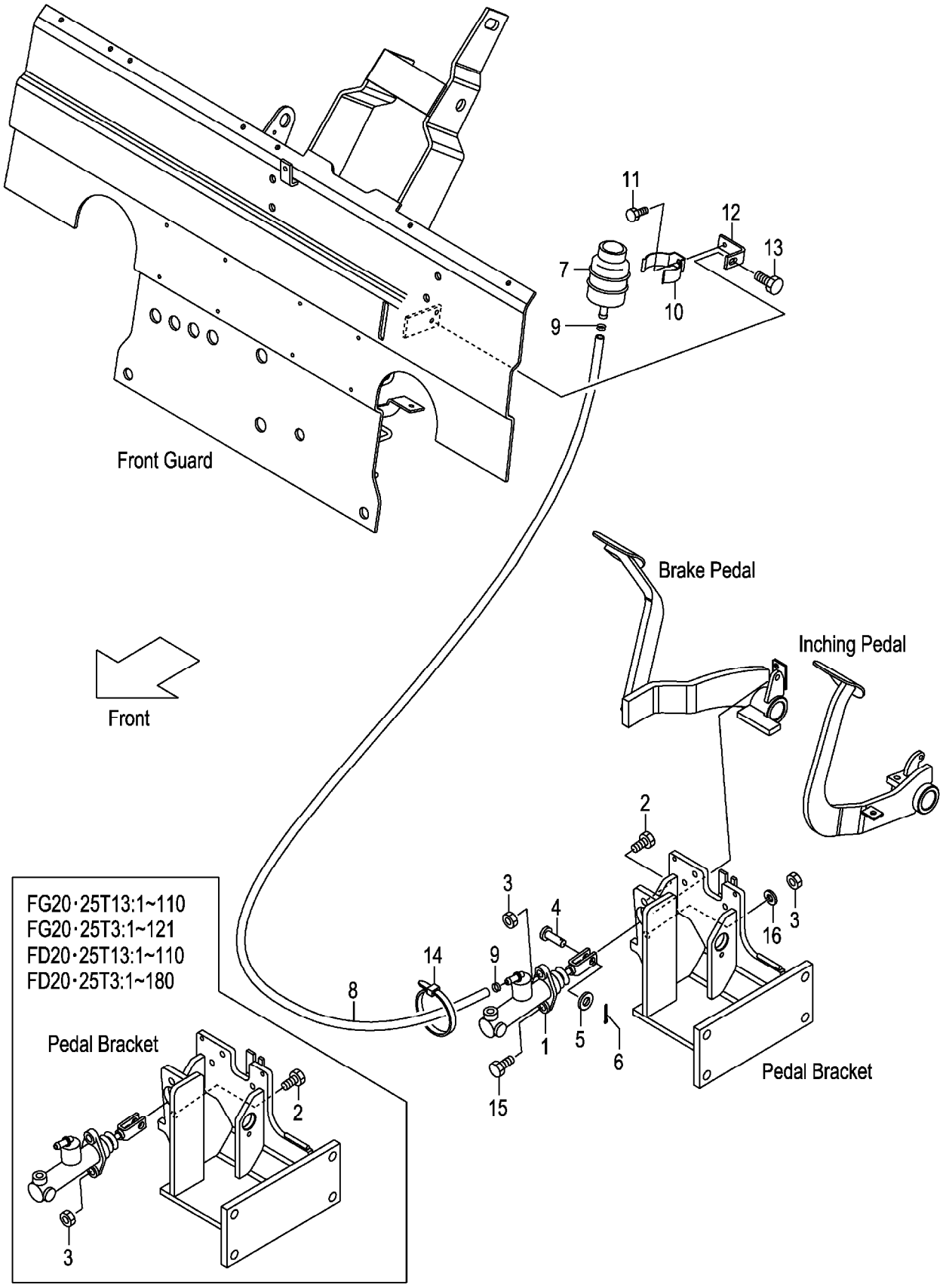

A:FG20T13 FG25T13 C:FD20T13 FD25T13
B:FG20T3 FG25T3 D:FD20T3 FD25T3

| Item No | Part No. | Mark | Description | | Req'd | Remarks : Serial No. |
|---|---|---|---|---|---|---|
| 1 | 27045-40302 | | CYL,BRAKE-MASTER | ｼﾘﾝﾀﾞ | 1 | SEE FIG.143 |
| 2 | 01184-10030 | | BOLT | ﾎﾞﾙﾄ | 2 | A,C:1-110<br>B:1-121<br>D:1-180 |
| - | 01184-10030 | | BOLT | ﾎﾞﾙﾄ | 1 | A,C:111-<br>B:122-<br>D:181- |
| 3 | 01400-00010 | | NUT | ﾅｯﾄ | 2 | |
| 4 | 02262-08025 | | PIN,CLEVIS | ﾋﾟﾝ | 1 | |
| 5 | 02000-00008 | | WASHER | ﾜｯｼｬ | 1 | |
| 6 | 02200-02020 | | PIN,COTTER | ﾋﾟﾝ | 1 | |
| 7 | 23775-42101 | | TANK,RESERVE | ﾀﾝｸ | 1 | |
| 8 | 27045-42371 | | HOSE,RESERVE | ﾎｰｽ | 1 | A,C:1-110<br>B:1-121<br>D:1-180 |
| - | 22655-42591 | | HOSE,RESERVE | ﾎｰｽ | 1 | A,C:111-<br>B:122-<br>D:181- |
| 9 | 25595-42491 | | BAND,HOSE | ﾊﾞﾝﾄﾞ | 2 | |
| 10 | 224G5-42061 | | CLIP,RESERVE-TANK | ｸﾘｯﾌﾟ | 1 | |
| 11 | 01183-06010 | | BOLT | ﾎﾞﾙﾄ | 1 | |
| 12 | 22N55-42141 | | BRACKET | ﾌﾞﾗｹｯﾄ | 1 | |
| 13 | 01185-08016 | | BOLT | ﾎﾞﾙﾄ | 1 | |
| 14 | 04913-11100 | | BAND | ﾊﾞﾝﾄﾞ | 1 | |
| 15 | 01100-10030 | | BOLT | ﾎﾞﾙﾄ | 1 | A,C:111-<br>B:122-<br>D:181- |
| 16 | 02010-00010 | | WASHER | ﾜｯｼｬ | 1 | A,C:111-<br>B:122-<br>D:181- |

# FIG.136 FOOT PEDAL CYLINDER (OIL CLUTCH)

(F7025460) ﾌｯﾄﾍﾟﾀﾞﾙｼﾘﾝﾀﾞ

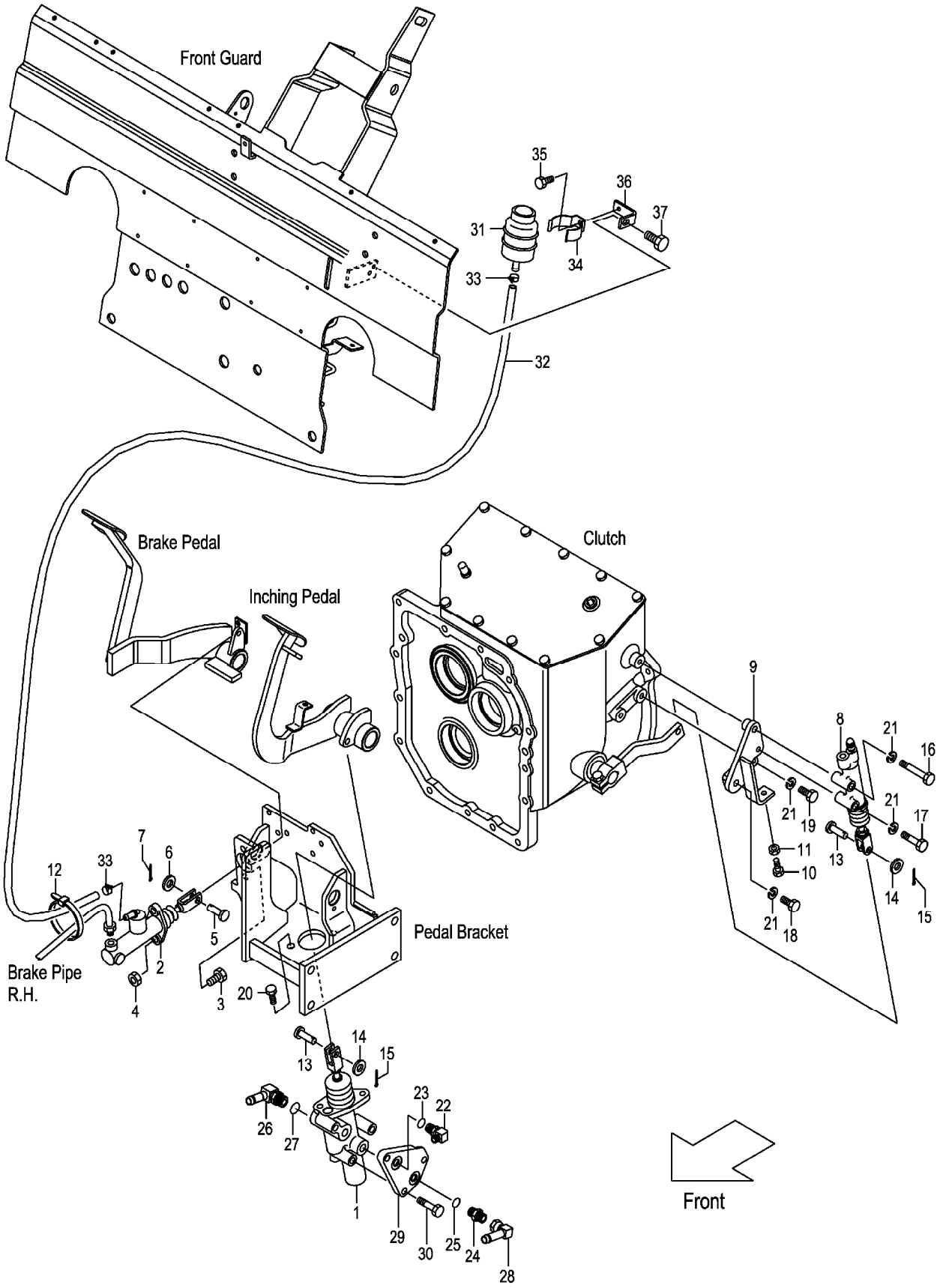

A:FG20W3 FG25W3
B:FD20W3 FD25W3

| Item No | Part No. | Mark | Description | | Req'd | Remarks : Serial No. |
|---|---|---|---|---|---|---|
| 1 | 224W5-30202 | | CYL,CLUTCH-MASTER | ｼﾘﾝﾀﾞ | 1 | SEE FIG.142 |
| 2 | 27045-40302 | | CYL,BRAKE-MASTER | ｼﾘﾝﾀﾞ | 1 | SEE FIG.143 |
| 3 | 01184-10030 | | BOLT | ﾎﾞﾙﾄ | 2 | |
| 4 | 01400-00010 | | NUT | ﾅｯﾄ | 2 | |
| 5 | 02262-08025 | | PIN,CLEVIS | ﾋﾟﾝ | 1 | |
| 6 | 02000-00008 | | WASHER | ﾜｯｼｬ | 1 | |
| 7 | 02200-02020 | | PIN,COTTER | ﾋﾟﾝ | 1 | |
| 8 | 522A2-10401 | | CYL,CLUTCH-RELEASE | ｼﾘﾝﾀﾞ | 1 | SEE FIG.145 |
| 9 | 22P45-30151 | | BRACKET,RELEASE-CYL | ﾌﾞﾗｹｯﾄ | 1 | |
| 10 | 01100-10025 | | BOLT | ﾎﾞﾙﾄ | 1 | |
| 11 | 01402-00010 | | NUT | ﾅｯﾄ | 1 | |
| 12 | 04913-11100 | | BAND | ﾊﾞﾝﾄﾞ | 1 | |
| 13 | 02262-10030 | | PIN,CLEVIS | ﾋﾟﾝ | 2 | |
| 14 | 02000-00010 | | WASHER | ﾜｯｼｬ | 2 | |
| 15 | 02200-32020 | | PIN,COTTER | ﾋﾟﾝ | 2 | |
| 16 | 01103-10075 | | BOLT | ﾎﾞﾙﾄ | 1 | |
| 17 | 01103-10050 | | BOLT | ﾎﾞﾙﾄ | 1 | |
| 18 | 01103-10035 | | BOLT | ﾎﾞﾙﾄ | 1 | |
| 19 | 01103-10025 | | BOLT | ﾎﾞﾙﾄ | 1 | |
| 20 | 01184-10025 | | BOLT | ﾎﾞﾙﾄ | 2 | |
| 21 | 02010-00010 | | WASHER | ﾜｯｼｬ | 4 | |
| A1 | 04150-20202 | | ELBOW-ASSY | ｴﾙﾎﾞｱｯｾﾝ | 1 | INC.22,23 |
| 22 | NO PART NO. | # | ELBOW | ｴﾙﾎﾞ | 1 | |
| 23 | 03320-00110 | | O-RING | Oﾘﾝｸﾞ | 1 | |
| A2 | 04134-20202 | | NIPPLE-ASSY | ﾆｯﾌﾟﾙｱｯｾﾝ | 1 | INC.24,25 |
| 24 | NO PART NO. | # | NIPPLE | ﾆｯﾌﾟﾙ | 1 | |
| 25 | 03320-00110 | | O-RING | Oﾘﾝｸﾞ | 1 | |
| A3 | 224W7-60311 | | FITTING-ASSY,HOSE | ﾎｰｽﾌｨｯﾃｨﾝｸﾞｱｯｾﾝ | 1 | INC.26,27 |
| 26 | NO PART NO. | # | FITTING,HOSE | ﾌｨｯﾃｨﾝｸﾞ | 1 | |
| 27 | 89140-00006 | | O-RING | Oﾘﾝｸﾞ | 1 | |
| 28 | 209P7-62151 | | FITTING,HOSE | ﾌｨｯﾃｨﾝｸﾞ | 1 | |
| 29 | 22P45-42201 | | PLATE,ADAPTER | ﾌﾟﾚｰﾄ | 1 | |
| 30 | 01184-10055 | | BOLT | ﾎﾞﾙﾄ | 3 | |
| 31 | 23775-42101 | | TANK,RESERVE | ﾀﾝｸ | 1 | |
| 32 | 22655-42591 | | HOSE,RESERVE | ﾎｰｽ | 1 | A<br>B:1-611<br>(-2005.3.6) |
| - | 272E5-42402 | | HOSE,RESERVE | ﾎｰｽ | 1 | A<br>B:612-<br>(2005.3.7-) |
| 33 | 25595-42491 | | CLIP,HOSE | ｸﾘｯﾌﾟ | 2 | |
| 34 | 224G5-42061 | | CLIP,RESERVE-TANK | ｸﾘｯﾌﾟ | 1 | |
| 35 | 01183-06010 | | BOLT | ﾎﾞﾙﾄ | 1 | |
| 36 | 22N55-42141 | | BRACKET | ﾌﾞﾗｹｯﾄ | 1 | |
| 37 | 01185-08016 | | BOLT | ﾎﾞﾙﾄ | 1 | |

# FIG.137 BRAKE PIPE (CLUTCH)

(F7025490) ﾌﾞﾚｰｷﾊﾟｲﾌﾟ

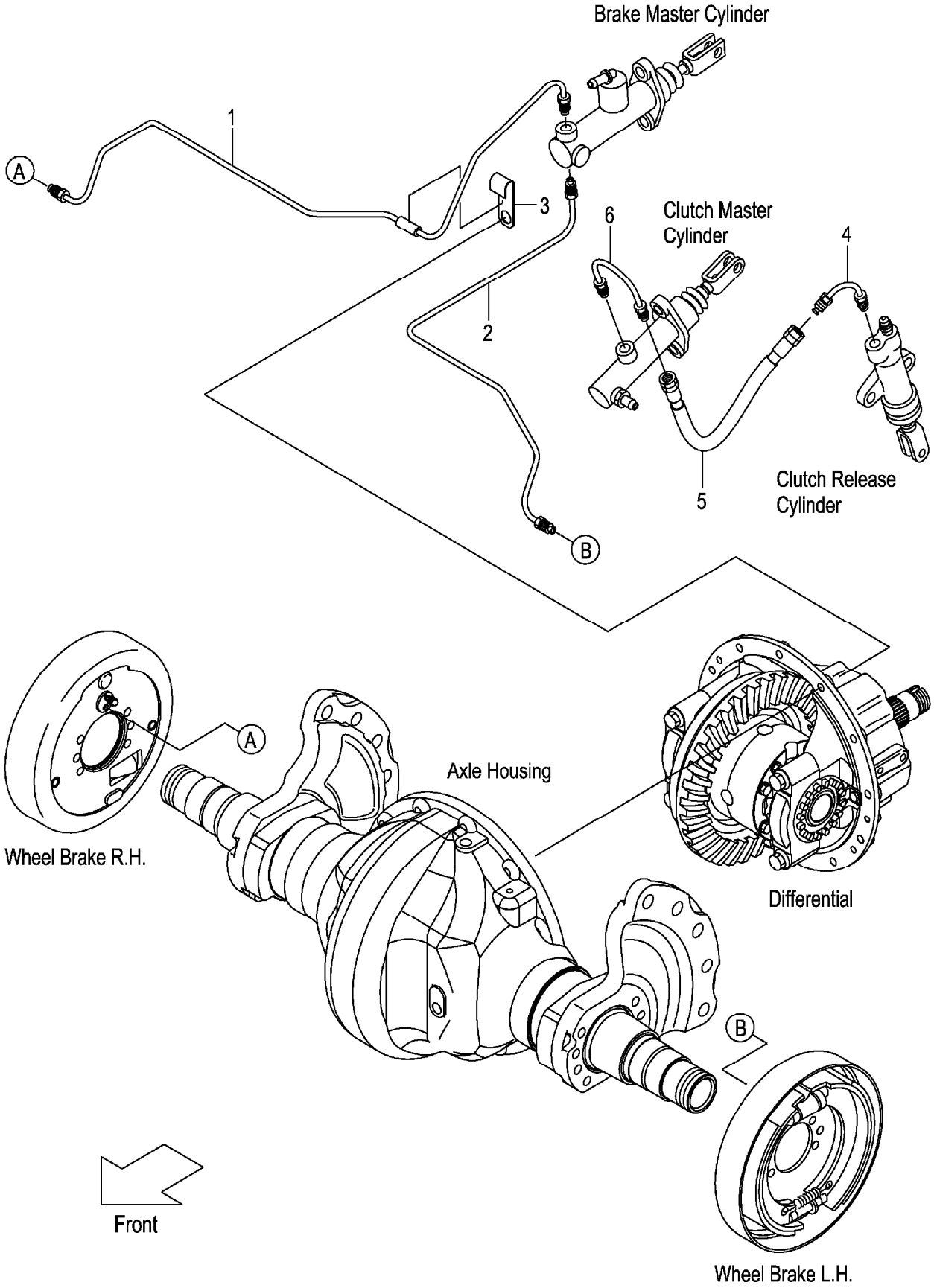

A:FG20C13 FG25C13 C:FD20C13 FD25C13
B:FG20C3 FG25C3 D:FD20C3 FD25C3

| Item No | Part No. | Mark | Description | | Req'd | Remarks : Serial No. |
|---|---|---|---|---|---|---|
| 1 | 22N45-42701 | | PIPE,BRAKE,RH | ﾊﾟｲﾌﾟ | 1 | |
| 2 | 22N45-42801 | | PIPE,BRAKE,LH | ﾊﾟｲﾌﾟ | 1 | |
| 3 | 22N55-42171 | | CLIP,PIPE | ｸﾘｯﾌﾟ | 1 | |
| 4 | 239A5-42471 | | PIPE,CLUTCH-MASTER | ﾊﾟｲﾌﾟ | 1 | |
| 5 | 240A5-42411 | | HOSE,BRAKE | ﾎｰｽ | 1 | A,C:1-110<br>B:1-121<br>D:1-180 |
| - | 22N45-42131 | | HOSE,BRAKE | ﾎｰｽ | 1 | A,C:111-<br>B:122-<br>D:181- |
| 6 | 22N45-32101 | | PIPE,MASTER-CYL | ﾊﾟｲﾌﾟ | 1 | |

# FIG.138 BRAKE PIPE (TOR-CON)

(F70254A0) ﾌﾞﾚｰｷﾊﾟｲﾌﾟ

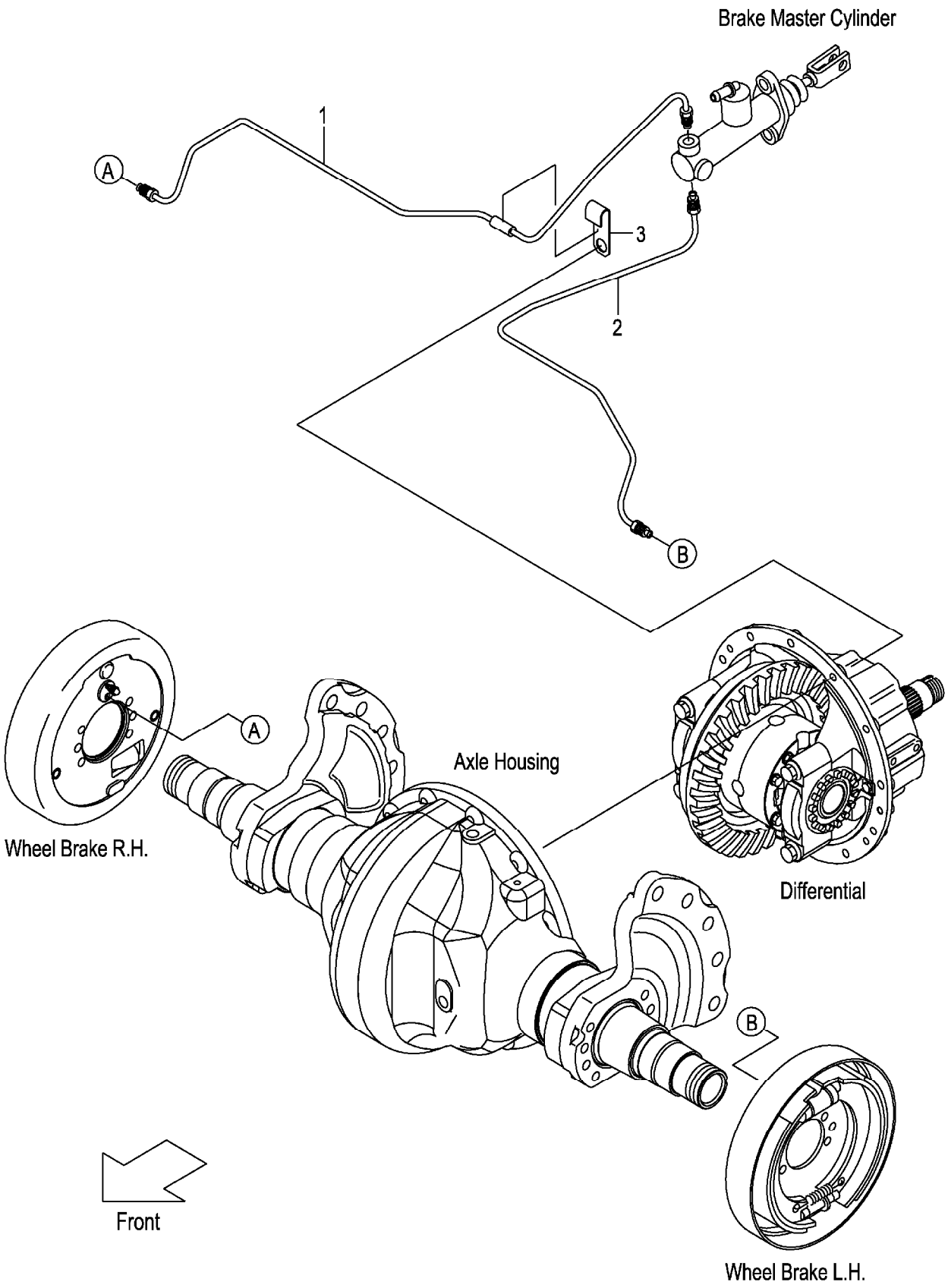

A:FG20T13 FG25T13 C:FD20T13 FD25T13
B:FG20T3 FG25T3 D:FD20T3 FD25T3

| Item No | Part No. | Mark | Description | Req'd | Remarks : Serial No. |
|---|---|---|---|---|---|
| 1 | 22N55-42702 | | PIPE,BRAKE,RH ﾊﾟｲﾌﾟ | 1 | |
| 2 | 22N55-42802 | | PIPE,BRAKE,LH ﾊﾟｲﾌﾟ | 1 | |
| 3 | 22N55-42171 | | CLIP,PIPE ｸﾘｯﾌﾟ | 1 | |

# FIG.139 BRAKE PIPE (OIL CLUTCH)

(F70254B0) ﾌﾞﾚｰｷﾊﾟｲﾌﾟ

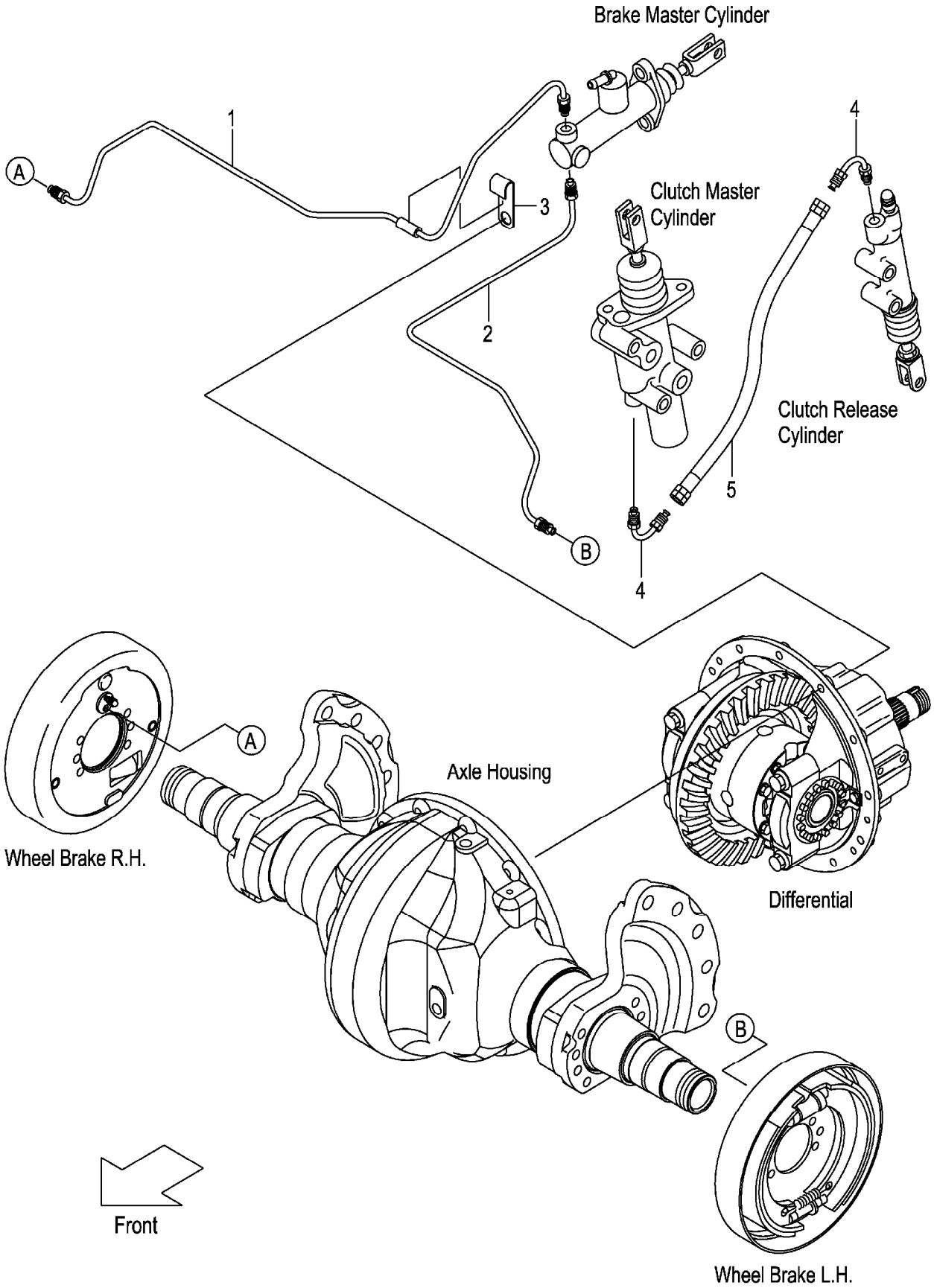

A:FG20W3 FG25W3
B:FD20W3 FD25W3

| Item No | Part No. | Mark | Description | | Req'd | Remarks : Serial No. |
|---|---|---|---|---|---|---|
| 1 | 22N45-42701 | | PIPE,BRAKE,RH | ﾊﾟｲﾌﾟ | 1 | |
| 2 | 22N45-42801 | | PIPE,BRAKE,LH | ﾊﾟｲﾌﾟ | 1 | |
| 3 | 22N55-42171 | | CLIP,PIPE | ｸﾘｯﾌﾟ | 1 | |
| 4 | 239A5-42471 | | PIPE,CLUTCH-MASTER | ﾊﾟｲﾌﾟ | 2 | |
| 5 | 240A5-42411 | | HOSE,BRAKE | ﾎｰｽ | 1 | |

# FIG.140 FOOT PEDAL PARTS

(F70254E0) フットペダルパーツ

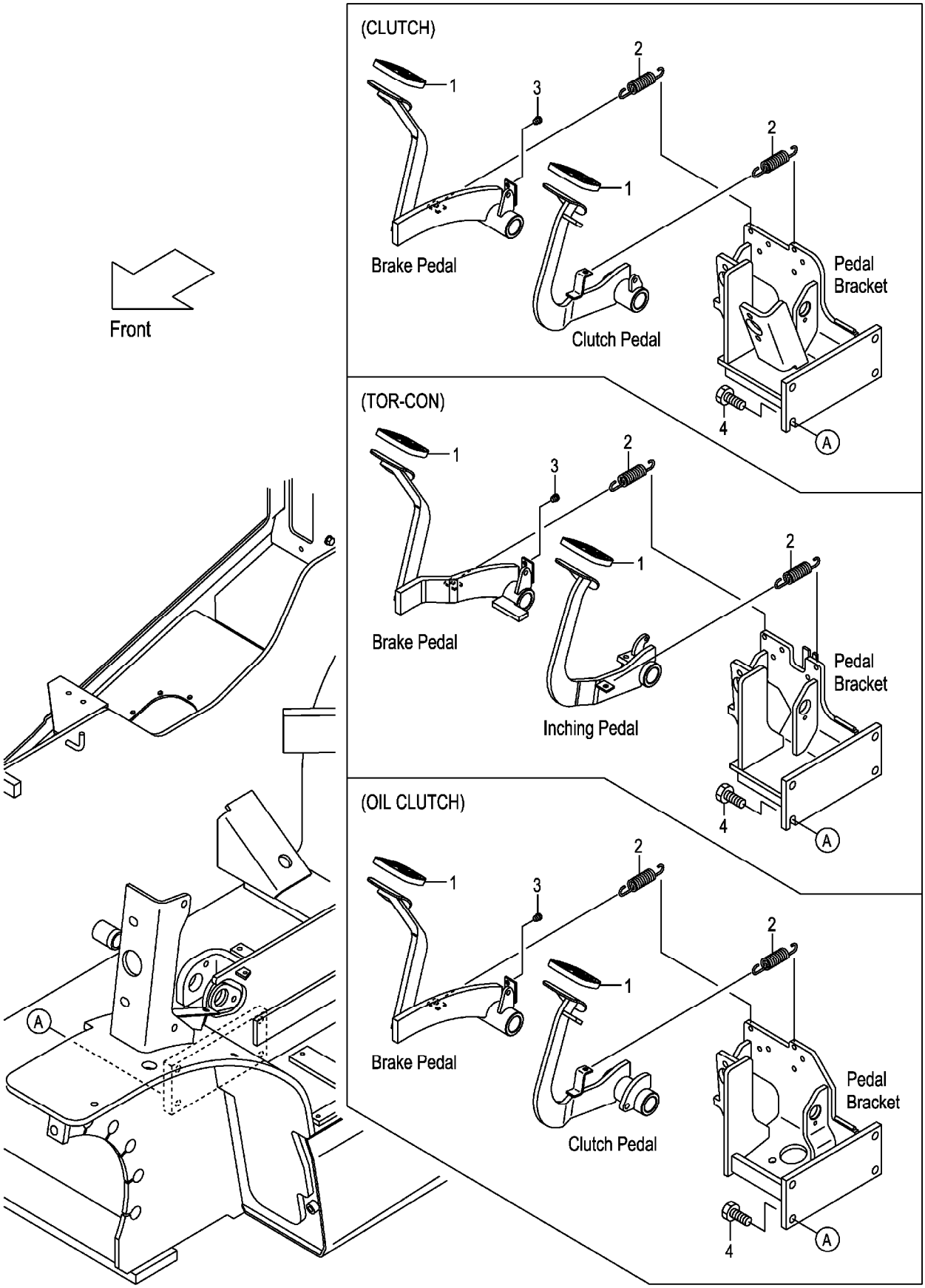

A:FG20C13 FG20T13 FG25C13 FG25T13 C:FD20C13 FD20T13 FD25C13 FD25T13 (F70254E0)
B:FG20C3 FG20T3 FG25C3 FG25T3 FG20W3 FG25W3 D:FD20C3 FD20T3 FD25C3 FD25T3 FD20W3 FD25W3

| Item No | Part No. | Mark | Description | | Req'd | Remarks : Serial No. |
|---|---|---|---|---|---|---|
| 1 | 239A5-42301 | | COVER,HEAD | ｶﾊﾞｰ | 2 | |
| 2 | 24235-42091 | | SPRING | ｽﾌﾟﾘﾝｸﾞ | 2 | |
| 3 | 23235-40091 | | RUBBER | ﾗﾊﾞｰ | 1 | |
| 4 | 01184-12030 | | BOLT | ﾎﾞﾙﾄ | 4 | |

# FIG.141 CLUTCH MASTER CYLINDER (CLUTCH)

(F70254K0) クラッチマスタシリンダ

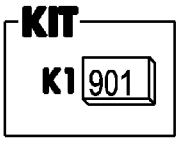


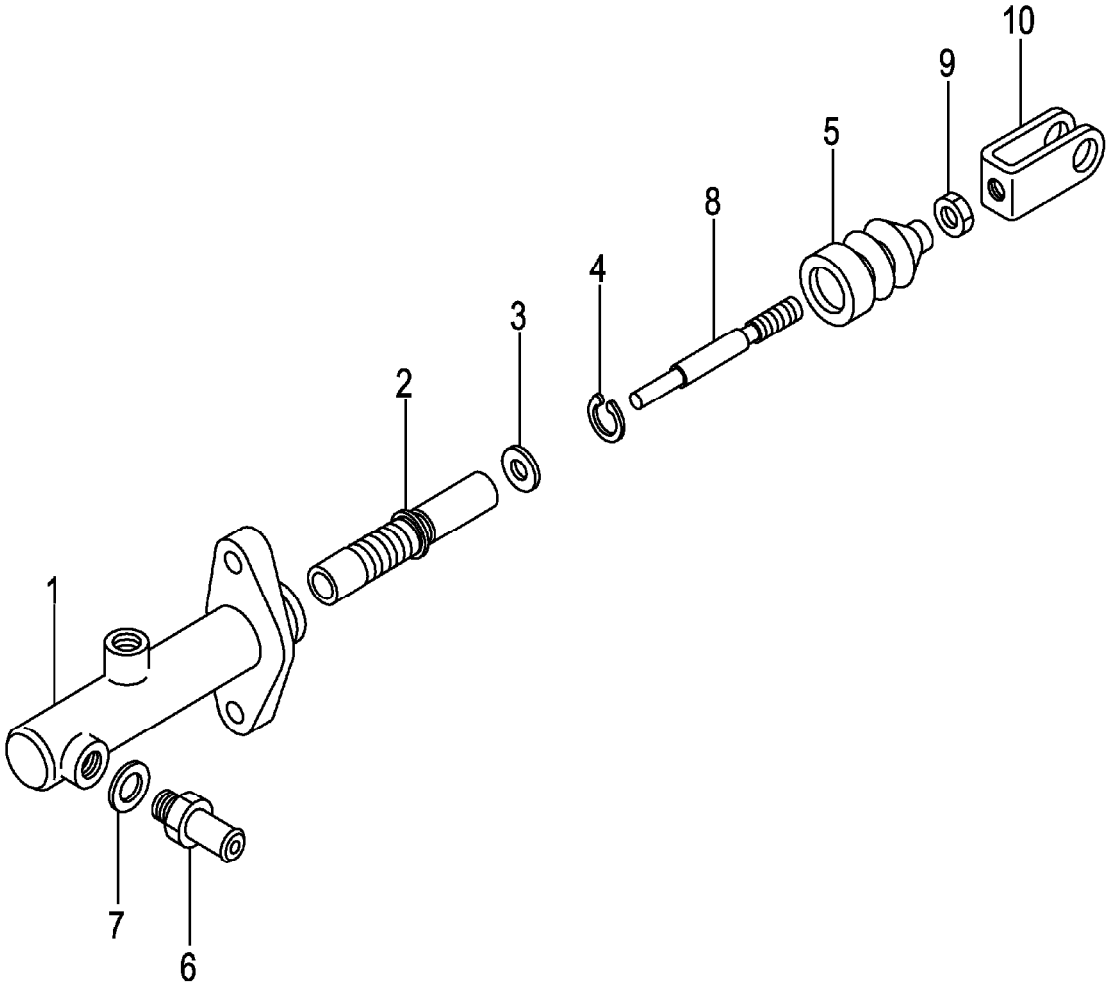

A:FG20C13 FG25C13 C:FD20C13 FD25C13
B:FG20C3 FG25C3 D:FD20C3 FD25C3

| Item No | Part No. | Mark | Description | | Req'd | Remarks : Serial No. |
|---|---|---|---|---|---|---|
| A1 | 239A5-40501 | | CYL-ASS'Y,CLUTCH-MASTER | クラッチマスタシリンダアッセン | 1 | INC.1-10 |
| 901 | 216G5-32201 | K1 | KIT,REPAIR | リペアキット | 1 | INC.2-5 |
| 1 | NO PART NO. | # | BODY,CYL | ボディ | 1 | |
| 2 | NO PART NO. | #* | PISTON | ピストン | 1 | |
| 3 | NO PART NO. | #* | PLATE,PISTON-STOPPER | プレート | 1 | |
| 4 | NO PART NO. | #* | RING,SNAP | スナップリング | 1 | |
| 5 | NO PART NO. | #* | BOOT | ブーツ | 1 | |
| 6 | 216G5-32331 | | UNION | ユニオン | 1 | |
| 7 | 216G5-32341 | | GASKET | ガスケット | 1 | |
| 8 | NO PART NO. | # | ROD,PUSH | ロッド | 1 | |
| 9 | 01402-00008 | | NUT | ナット | 1 | |
| 10 | 25595-42452 | | CLEVIS | クレビス | 1 | |

# FIG.142 CLUTCH MASTER CYLINDER (OIL CLUTCH)

(F70254L0) クラッチマスタシリンダ

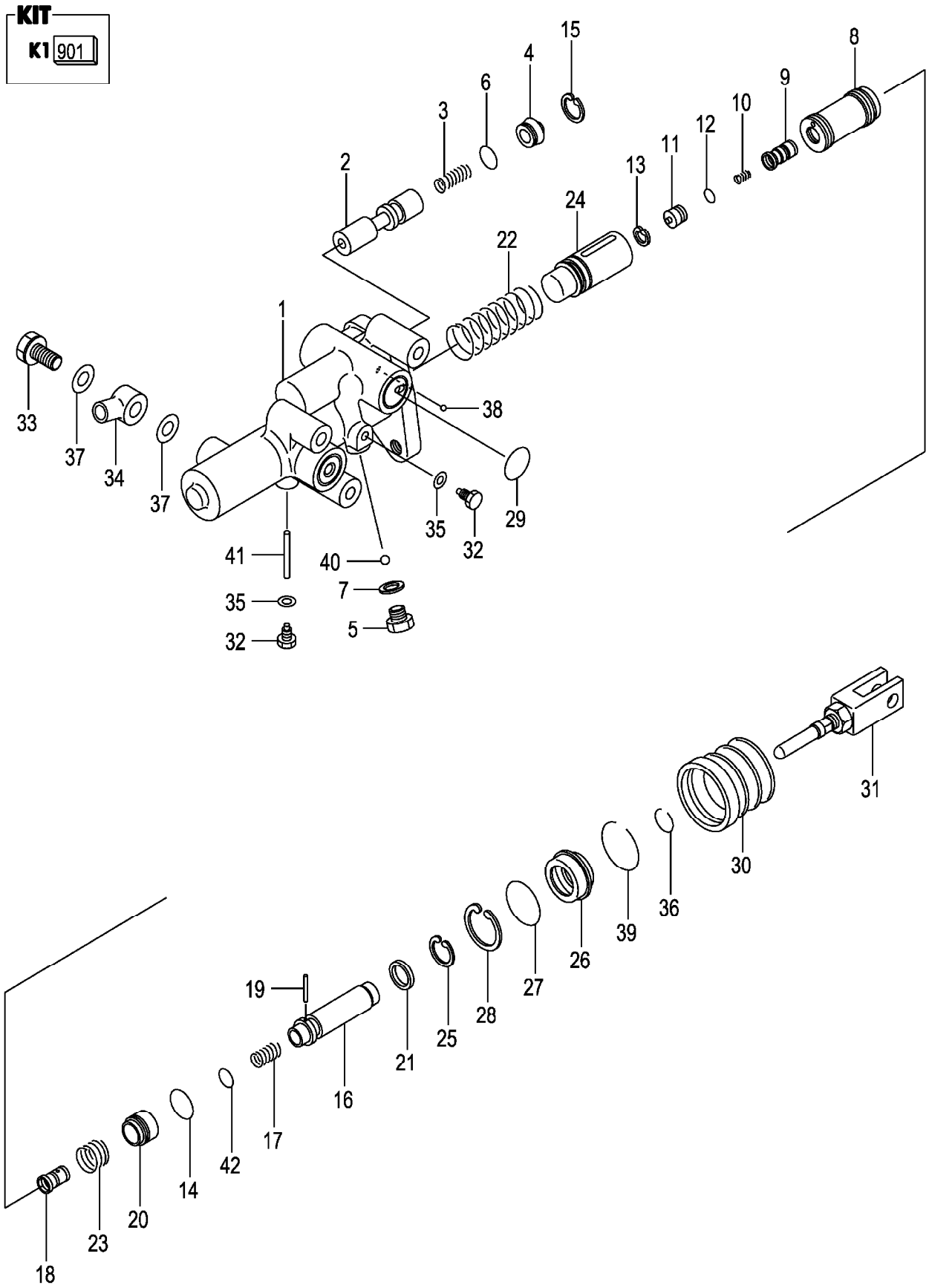

A:FG20W3 FG25W3
B:FD20W3 FD25W3

| Item No | Part No. | Mark | Description | | Req'd | Remarks : Serial No. |
|---|---|---|---|---|---|---|
| A1 | 224W5-30202 | | CYL-ASS'Y,CLUTCH-MASTER | クラッチマスタシリンダアッセン | 1 | INC.1-42 |
| 901 | 224W5-32501 | K1 | KIT,OVERHAUL | オーバホールキット | 1 | INC.6-8,12-15,19,24-30,35-42 |
| 1 | NO PART NO. | # | BODY,BOOSTER | ボディ | 1 | |
| 2 | 224W5-32511 | | SPOOL,FLOW-DIVIDER | スプール | 1 | |
| 3 | 522A2-18011 | | SPRING,FLOW-DIVIDER | スプリング | 1 | |
| 4 | 522A2-18021 | | PLUG | プラグ | 1 | |
| 5 | 522A2-18041 | | PLUG | プラグ | 1 | |
| 6 | 522A2-18031 | * | O-RING | Oリング | 1 | |
| 7 | 522A2-18051 | * | GASKET | ガスケット | 1 | |
| 8 | 224W5-32401 | * | PISTON,POWER | ピストン | 1 | |
| 9 | 522A2-18071 | | VALVE,CONTROL | バルブ | 1 | |
| 10 | 522A2-18081 | | SPRING,CONTROL-VALVE | スプリング | 1 | |
| 11 | 522A2-18091 | | PLUG,PISTON | プラグ | 1 | |
| 12 | 522A2-18101 | * | O-RING | Oリング | 1 | |
| 13 | 522A2-18111 | * | RING,SNAP | スナップリング | 1 | |
| 14 | 522A2-18121 | * | O-RING | Oリング | 1 | |
| 15 | 522A2-18131 | * | RING,SNAP | スナップリング | 1 | |
| 16 | 224W5-42401 | | PISTON,REACTION | ピストン | 1 | |
| 17 | 224W5-32421 | | SPRING,RELIEF-VALVE | スプリング | 1 | |
| 18 | 522A2-18161 | | SEAT,CONTROL-VALVE | シート | 1 | |
| 19 | 522A2-18171 | * | PIN | ピン | 1 | |
| 20 | 224W5-42431 | | PISTON,REACTION | ピストン | 1 | |
| 21 | 522A2-18201 | | WASHER | ワッシャ | 1 | |
| 22 | 224W5-32551 | | SPRING,RETURN,PISTON | スプリング | 1 | |
| 23 | 522A2-18221 | | SPRING,RETURN,VALVE | スプリング | 1 | |
| 24 | 224W5-32441 | * | PISTON,MASTER-CYL | ピストン | 1 | |
| 25 | 522A2-18211 | * | RING,SNAP | スナップリング | 1 | |
| 26 | 224W5-32521 | * | GUIDE,REACTION | ガイド | 1 | |
| 27 | 224W5-32451 | * | O-RING | Oリング | 1 | |
| 28 | 224W5-32461 | * | RING,SNAP | スナップリング | 1 | |
| 29 | 522A2-18281 | * | O-RING | Oリング | 2 | |
| 30 | 224W5-32471 | * | BOOT | ブーツ | 1 | |
| 31 | 522A2-18301 | | ROD,PUSH | ロッド | 1 | |
| 32 | 522A2-18311 | | BOLT | ボルト | 2 | |
| 33 | 522A2-18341 | | BOLT,UNION | ボルト | 1 | |
| 34 | 522A2-18352 | | UNION | ユニオン | 1 | |
| 35 | 522A2-18321 | * | GASKET | ガスケット | 2 | |
| 36 | 522A2-18331 | * | RING,SNAP | スナップリング | 1 | |
| 37 | 522A2-18361 | * | GASKET | ガスケット | 2 | |
| 38 | 522A2-18371 | * | BALL | ボール | 1 | |
| 39 | 224W5-32481 | * | RING,SNAP | スナップリング | 1 | |
| 40 | 522A2-18391 | * | BALL | ボール | 1 | |
| 41 | 224W5-32491 | * | PIN | ピン | 1 | |
| 42 | 55952-18021 | * | O-RING | Oリング | 1 | |

# FIG.143 BRAKE MASTER CYLINDER

(F70254M0) ﾌﾞﾚｰｷﾏｽﾀｼﾘﾝﾀﾞ

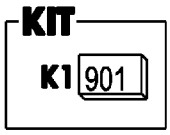


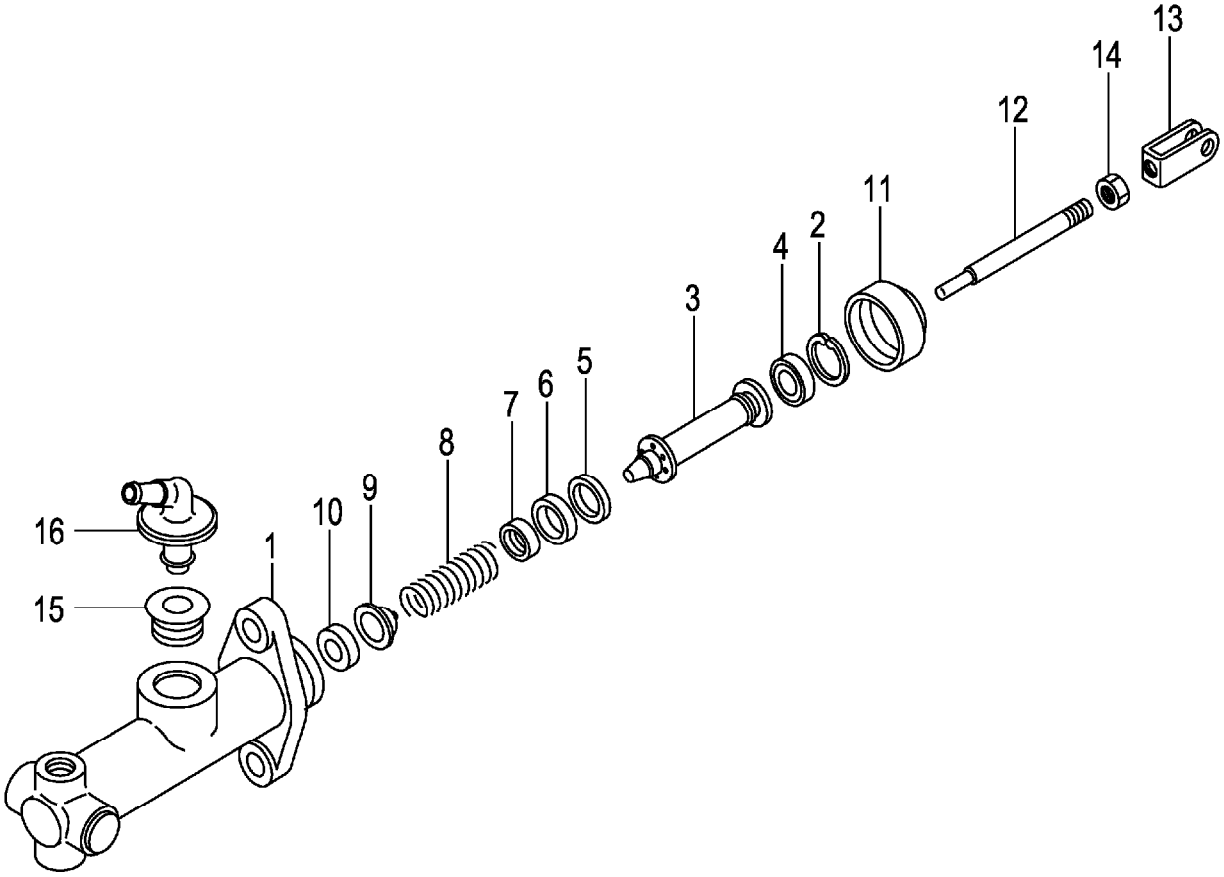

A:FG20C13 FG20T13 FG25C13 FG25T13 C:FD20C13 FD20T13 FD25C13 FD25T13 (F70254M0)
B:FG20C3 FG20T3 FG25C3 FG25T3 FG20W3 FG25W3 D:FD20C3 FD20T3 FD25C3 FD25T3 FD20W3 FD25W3

| Item No | Part No. | Mark | Description | | Req'd | Remarks : Serial No. |
|---|---|---|---|---|---|---|
| A1 | 27045-40302 | | CYL-ASS'Y,BRAKE-MASTER | ﾌﾞﾚｰｷﾏｽﾀｼﾘﾝﾀﾞｱｯｾﾝ | 1 | INC.1-16 |
| 901 | 25595-42501 | K1 | KIT,REPAIR | ﾘﾍﾟｱｷｯﾄ | 1 | INC.2-11 |
| 1 | NO PART NO. | # | BODY,CYL | ﾎﾞﾃﾞｨ | 1 | |
| 2 | NO PART NO. | #* | RING,SNAP | ｽﾅｯﾌﾟﾘﾝｸﾞ | 1 | |
| 3 | NO PART NO. | #* | PISTON | ﾋﾟｽﾄﾝ | 1 | |
| 4 | NO PART NO. | #* | CAP,SECONDARY | ｷｬｯﾌﾟ | 1 | |
| 5 | NO PART NO. | #* | SPACER | ｽﾍﾟｰｻ | 1 | |
| 6 | NO PART NO. | #* | CAP,PRIMARY | ｷｬｯﾌﾟ | 1 | |
| 7 | NO PART NO. | #* | SEAT,SPRING | ｼｰﾄ | 1 | |
| 8 | NO PART NO. | #* | SPRING | ｽﾌﾟﾘﾝｸﾞ | 1 | |
| 9 | NO PART NO. | #* | VALVE | ﾊﾞﾙﾌﾞ | 1 | |
| 10 | NO PART NO. | #* | SEAT,VALVE | ｼｰﾄ | 1 | |
| 11 | NO PART NO. | #* | BOOT | ﾌﾞｰﾂ | 1 | |
| A2 | 25595-42482 | | ROD-ASSY,PUSH | ﾌﾟｯｼｭﾛｯﾄﾞｱｯｾﾝ | 1 | INC.12-14 |
| 12 | NO PART NO. | # | ROD,PUSH | ﾛｯﾄﾞ | 1 | |
| 13 | 25595-42452 | | CLEVIS | ｸﾚﾋﾞｽ | 1 | |
| 14 | 01402-00008 | | NUT | ﾅｯﾄ | 1 | |
| 15 | 25595-42421 | | BUSHING | ﾌﾞｯｼﾝｸﾞ | 1 | |
| 16 | 25595-42411 | | UNION,FILLER | ﾕﾆｵﾝ | 1 | |

# FIG.144 CLUTCH RELEASE CYLINDER (CLUTCH)

(F70254P0) クラッチリリースシリンダ

KIT

K1 901

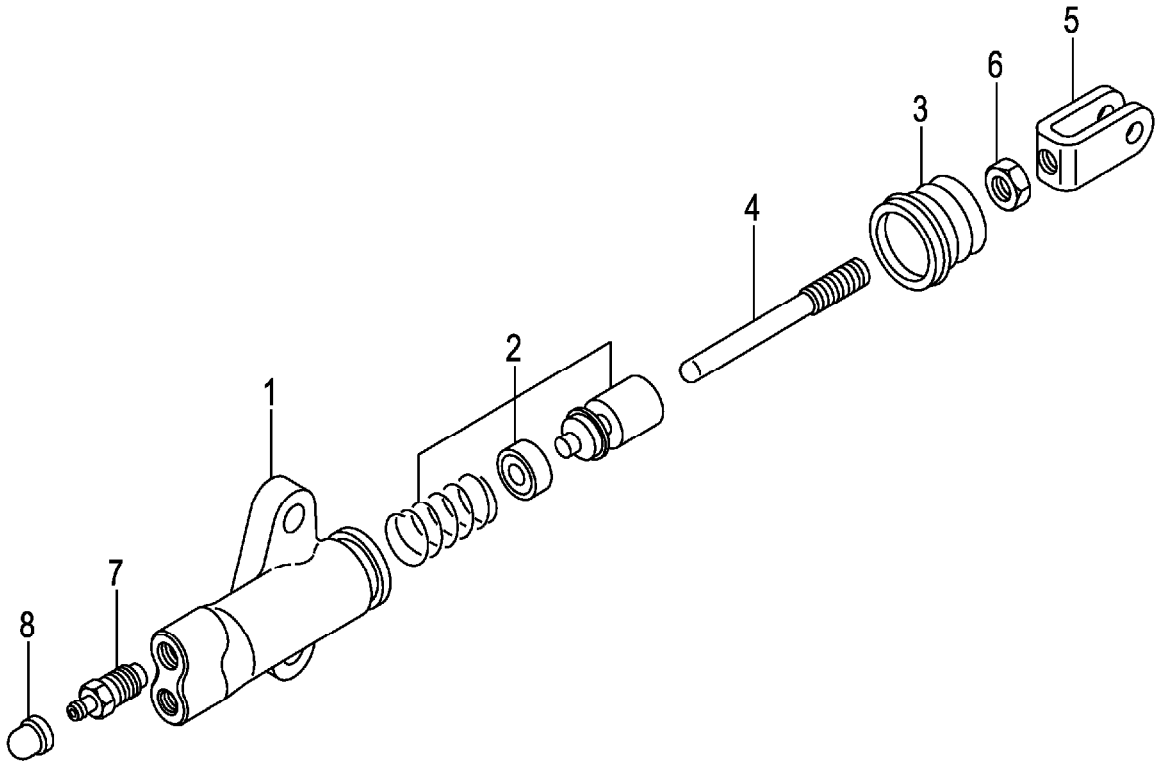

A:FG20C13 FG25C13 C:FD20C13 FD25C13
B:FG20C3 FG25C3 D:FD20C3 FD25C3

| Item No | Part No. | Mark | Description | | Req'd | Remarks : Serial No. |
|---|---|---|---|---|---|---|
| A1 | 214A5-32312 | | CYL-ASS'Y,CLUTCH-RELEASE | クラッチリリースシリンダアッセン | 1 | INC.1-8 |
| 901 | 214A5-33012 | K1 | KIT,REPAIR | リペアキット | 1 | INC.2,3 |
| 1 | NO PART NO. | # | BODY,CYL | ボディ | 1 | |
| 2 | NO PART NO. | #* | PISTON | ピストン | 1 | |
| 3 | NO PART NO. | #* | BOOT | ブーツ | 1 | |
| A2 | 214A5-33052 | | ROD-ASSY,PUSH | プッシュロッドアッセン | 1 | INC.4-6 |
| 4 | 214A5-33062 | | ROD,PUSH | ロッド | 1 | |
| 5 | 25595-42452 | | CLEVIS | クレビス | 1 | |
| 6 | 01402-00008 | | NUT | ナット | 1 | |
| 7 | 214A5-33031 | | VALVE,BLEEDER | バルブ | 1 | |
| 8 | 214A5-33041 | | CAP,BLEEDER | キャップ | 1 | |

# FIG.145 CLUTCH RELEASE CYLINDER (OIL CLUTCH)

(F70254Q0) クラッチリリースシリンダ

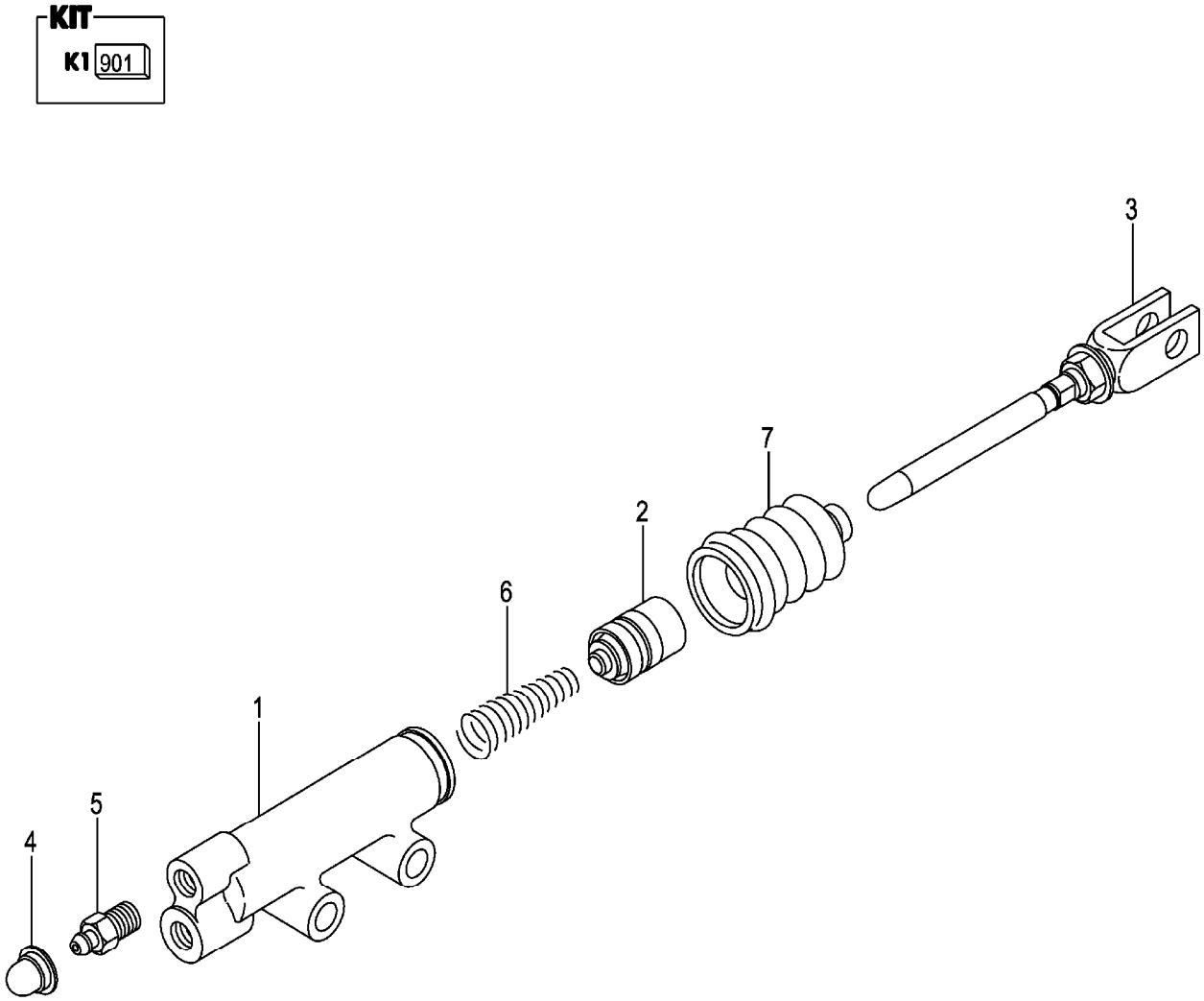

A:FG20W3 FG25W3
B:FD20W3 FD25W3

| Item No | Part No. | Mark | Description | | Req'd | Remarks : Serial No. |
|---|---|---|---|---|---|---|
| A1 | 522A2-10401 | | CYL-ASSY,RELEASE | ﾘﾘｰｽｼﾘﾝﾀﾞｱｯｾﾝ | 1 | INC.1-7 |
| 901 | 522A2-11601 | K1 | KIT,OVERHAUL | ｵｰﾊﾞﾎｰﾙｷｯﾄ | 1 | INC.2,4,6,7 |
| 1 | NO PART NO. | # | BODY,CYL | ﾎﾞﾃﾞｨ | 1 | |
| 2 | 522A2-18541 | * | PISTON,RELEASE-CYL | ﾋﾟｽﾄﾝ | 1 | |
| 3 | 522A2-18551 | | ROD,PUSH | ﾛｯﾄﾞ | 1 | |
| 4 | 522A2-18561 | * | CAP,BLEEDER-PLUG | ｷｬｯﾌﾟ | 1 | |
| 5 | 522A2-18571 | | PLUG,BLEEDER | ﾌﾟﾗｸﾞ | 1 | |
| 6 | 522A2-18581 | * | SPRING,CONICAL | ｽﾌﾟﾘﾝｸﾞ | 1 | |
| 7 | 522A2-18591 | * | BOOT | ﾌﾞｰﾂ | 1 | |

# FIG.146 BRAKE LEVER

(F7025510) ﾌﾞﾚｰｷﾚﾊﾞｰ

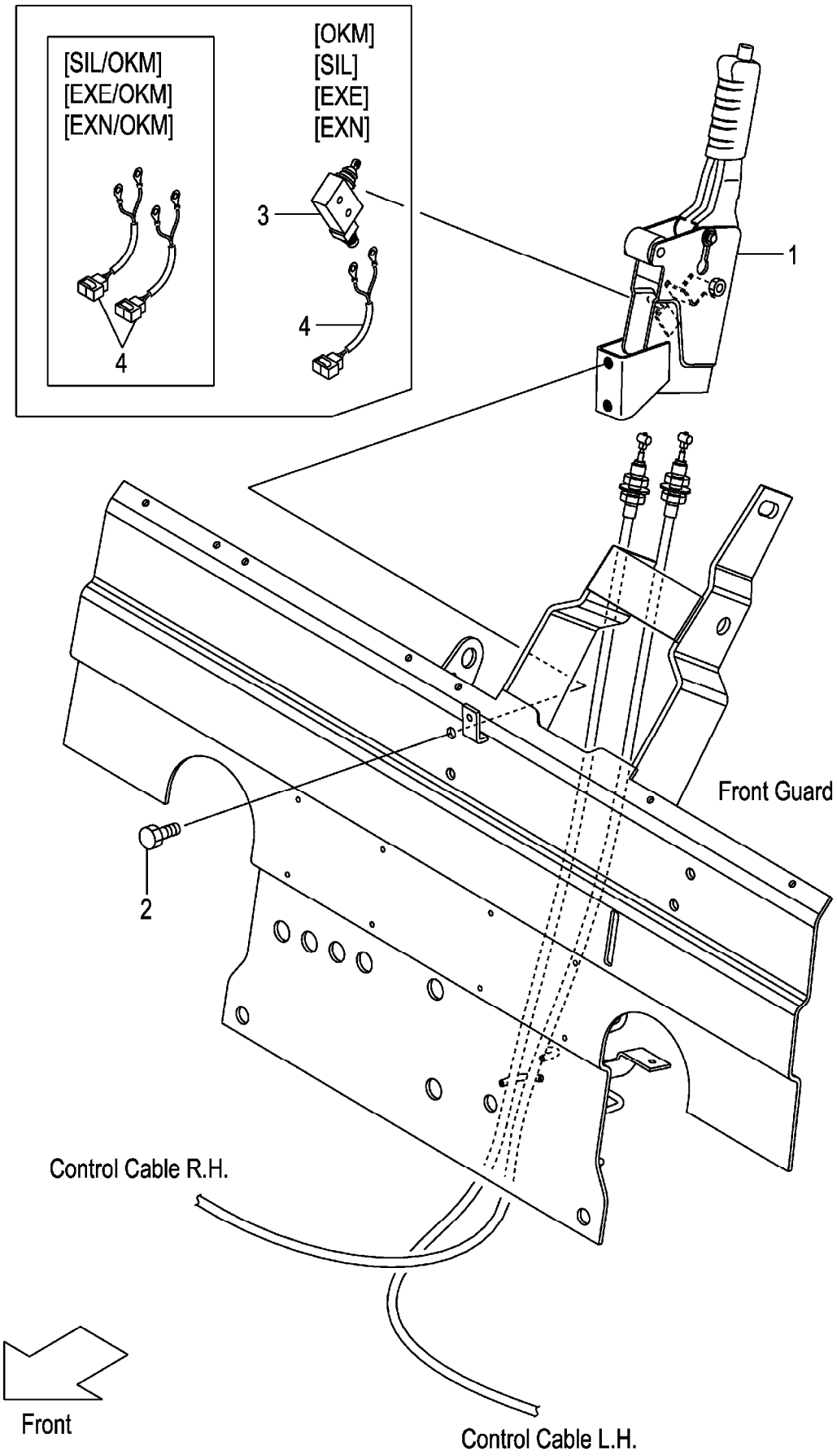

A:FG20C13 FG20T13 FG25C13 FG25T13 D:FD20C13 FD20T13 FD25C13 FD25T13
B:FG20C3 FG20T3 FG25C3 FG25T3 E:FD20C3 FD20T3 FD25C3 FD25T3
C:FG20W3 FG25W3 F:FD20W3 FD25W3

**FIG.146**
(F7025510)

| Item No | Part No. | Mark | Description | | Req'd | Remarks : Serial No. |
|---|---|---|---|---|---|---|
| 1 | 22N55-50101 | | LEVER,PARKING-BRAKE | ﾚﾊﾞｰ | 1 | |
| 2 | 01184-10050 | | BOLT | ﾎﾞﾙﾄ | 2 | A,D:1-109<br>B,C,E,F:1-110 |
| - | 01184-10025 | | BOLT | ﾎﾞﾙﾄ | 2 | A,D:110-<br>B,C,E,F:111-<br>[OKM][SIL][SIL/OKM] |
| 3 | 27912-62441 | | SWITCH,MICRO | ｽｲｯﾁ | 1 | |
| - | 27912-62441 | | SWITCH,MICRO | ｽｲｯﾁ | 1 | B,E<br>[EXE][EXN][EXE/OKM][EXN/OKM] |
| 4 | 535H3-82261 | | WIRE-HARNESS,SWITCH | ﾜｲﾔﾊｰﾈｽ | 1 | A,D:1-109<br>B,C,E,F:1-110<br>[OKM][SIL] |
| - | 278M2-42061 | | WIRE-HARNESS,SWITCH | ﾜｲﾔﾊｰﾈｽ | 1 | A,D:110-<br>B,C,E,F:111-<br>[OKM][SIL] |
| - | 535H3-82261 | | WIRE-HARNESS,SWITCH | ﾜｲﾔﾊｰﾈｽ | 1 | B,E:1-110<br>[EXE][EXN] |
| - | 278M2-42061 | | WIRE-HARNESS,SWITCH | ﾜｲﾔﾊｰﾈｽ | 1 | B,E:111-<br>[EXE][EXN] |
| - | 278M2-42061 | | WIRE-HARNESS,SWITCH | ﾜｲﾔﾊｰﾈｽ | 2 | [SIL/OKM] |
| - | 278M2-42061 | | WIRE-HARNESS,SWITCH | ﾜｲﾔﾊｰﾈｽ | 2 | B,E<br>[EXE/OKM][EXN/OKM] |

## FIG.147 FRAME

(F7026110) フレーム

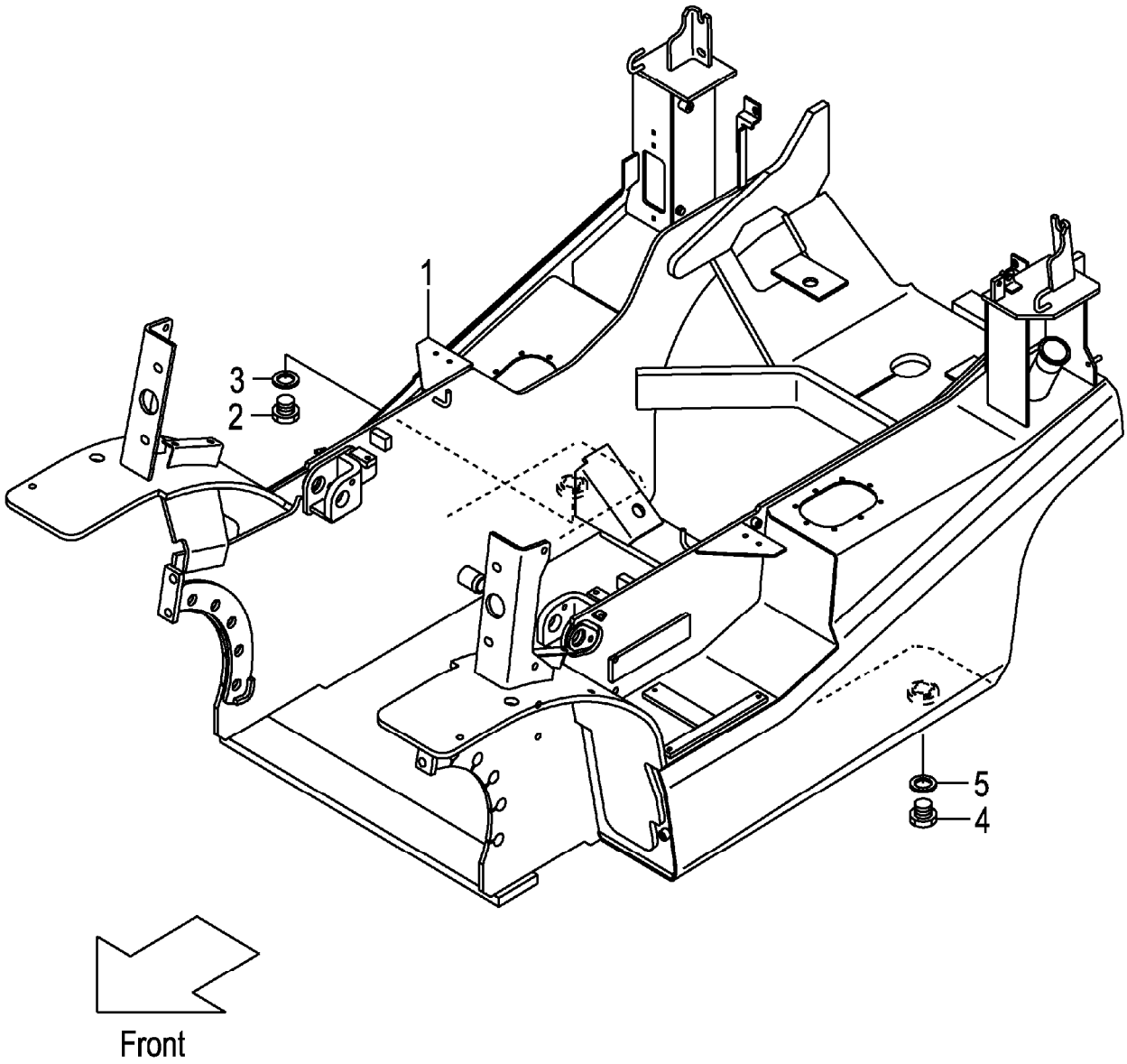

A:FG20C13 FG20T13 FG25C13 FG25T13 C:FD20C13 FD20T13 FD25C13 FD25T13 (F7026110)
B:FG20C3 FG20T3 FG25C3 FG25T3 FG20W3 FG25W3 D:FD20C3 FD20T3 FD25C3 FD25T3 FD20W3 FD25W3

| Item No | Part No. | Mark | Description | | Req'd | Remarks : Serial No. |
|---|---|---|---|---|---|---|
| 1 | NO PART NO. | # | FRAME | ﾌﾚｰﾑ | 1 | |
| 2 | 21237-52051 | | PLUG,DRAIN | ﾌﾟﾗｸﾞ | 1 | |
| 3 | 21237-52062 | | PACKING | ﾊﾟｯｷﾝｸﾞ | 1 | |
| 4 | 21237-52051 | | PLUG,DRAIN | ﾌﾟﾗｸﾞ | 1 | |
| 5 | 21237-52062 | | PACKING | ﾊﾟｯｷﾝｸﾞ | 1 | |

# FIG.148 OIL TANK

(F7026120) オイルタンク

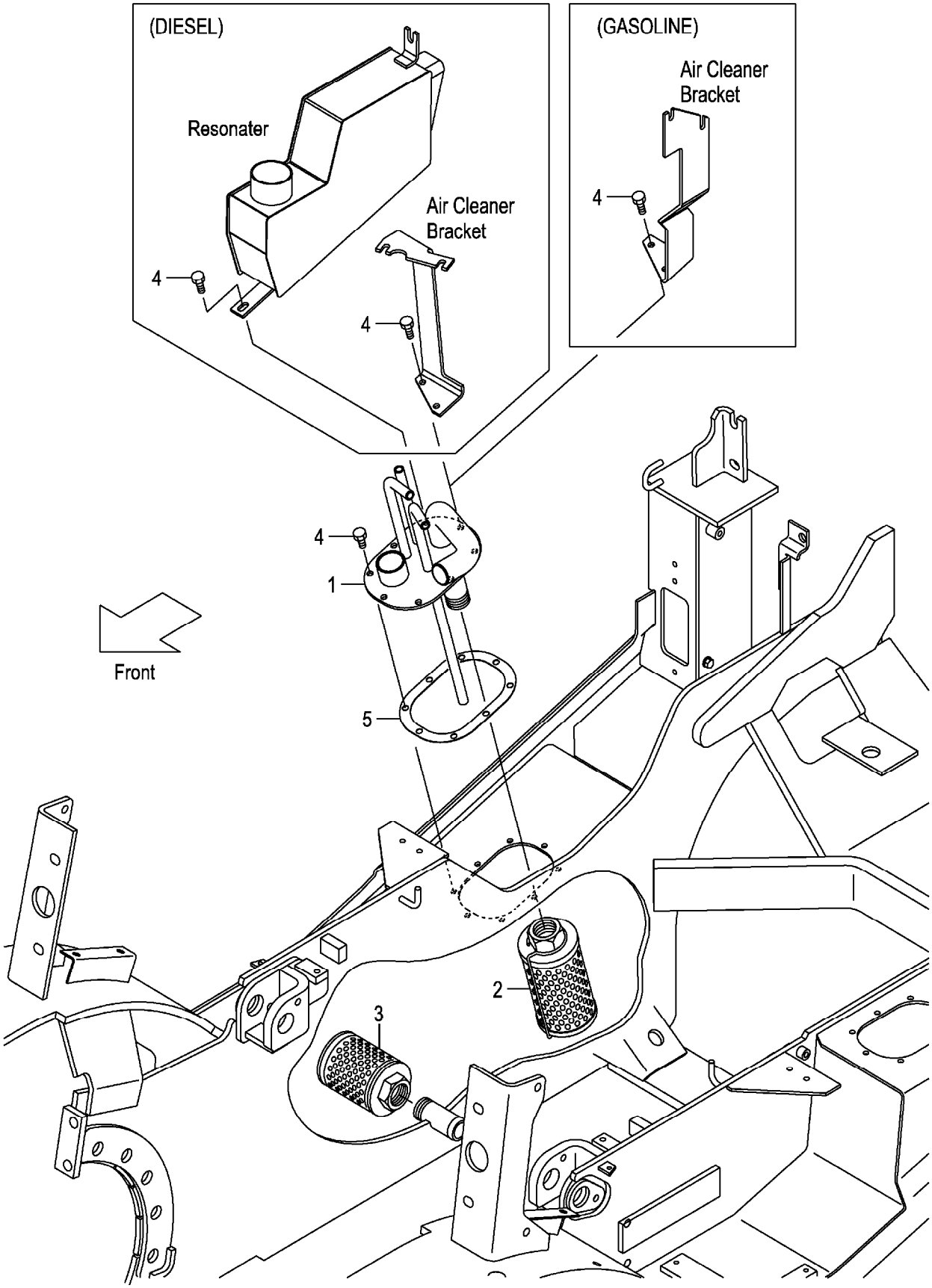

A:FG20C13 FG20T13 FG25C13 FG25T13 C:FD20C13 FD20T13 FD25C13 FD25T13 (F7026120)
B:FG20C3 FG20T3 FG25C3 FG25T3 FG20W3 FG25W3 D:FD20C3 FD20T3 FD25C3 FD25T3 FD20W3 FD25W3

| Item No | Part No. | Mark | Description | | Req'd | Remarks : Serial No. |
|---|---|---|---|---|---|---|
| 1 | 22N57-52302 | | PIPE,RETURN | ﾊﾟｲﾌﾟ | 1 | |
| 2 | 271A7-52301 | | FILTER,RETURN | ﾌｨﾙﾀ | 1 | |
| 3 | 216G7-52051 | | FILTER,SUCTION | ﾌｨﾙﾀ | 1 | |
| 4 | 229F2-22151 | | BOLT | ﾎﾞﾙﾄ | 8 | |
| 5 | 22N52-22201 | | PACKING | ﾊﾟｯｷﾝｸﾞ | 1 | |

# FIG.149 OIL CAP & LEVEL

(F7026130) オイルキャップ&レベル

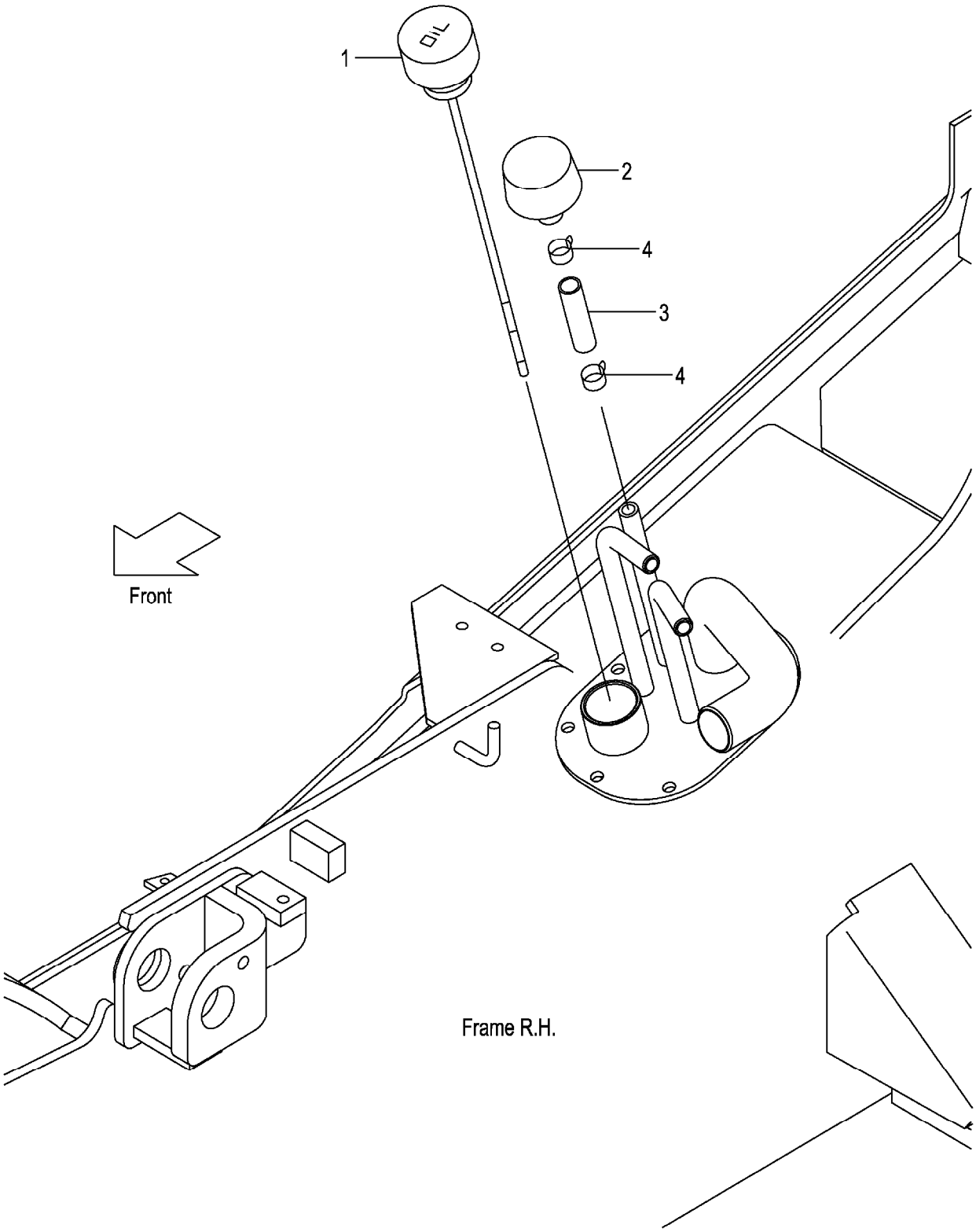

A:FG20C13 FG20T13 FG25C13 FG25T13 C:FD20C13 FD20T13 FD25C13 FD25T13 (F7026130)
B:FG20C3 FG20T3 FG25C3 FG25T3 FG20W3 FG25W3 D:FD20C3 FD20T3 FD25C3 FD25T3 FD20W3 FD25W3

| Item No | Part No. | Mark | Description | | Req'd | Remarks : Serial No. |
|---|---|---|---|---|---|---|
| 1 | 22N57-52101 | | CAP,OIL | ｷｬｯﾌﾟ | 1 | A:1-128<br>B:1-239<br>C:1-125<br>D:1-505 |
| - | 22N57-52102 | | CAP,OIL | ｷｬｯﾌﾟ | 1 | A:129-<br>B:240-<br>C:126-<br>D:506- |
| 2 | 216G7-52201 | | CAP,BREATHER | ｷｬｯﾌﾟ | 1 | |
| 3 | 04710-04005 | | HOSE | ﾎｰｽ | 1 | |
| 4 | 04914-00019 | | CLIP | ｸﾘｯﾌﾟ | 2 | |

# FIG.150 FUEL TANK (GASOLINE)

(F7026140) フューエルタンク

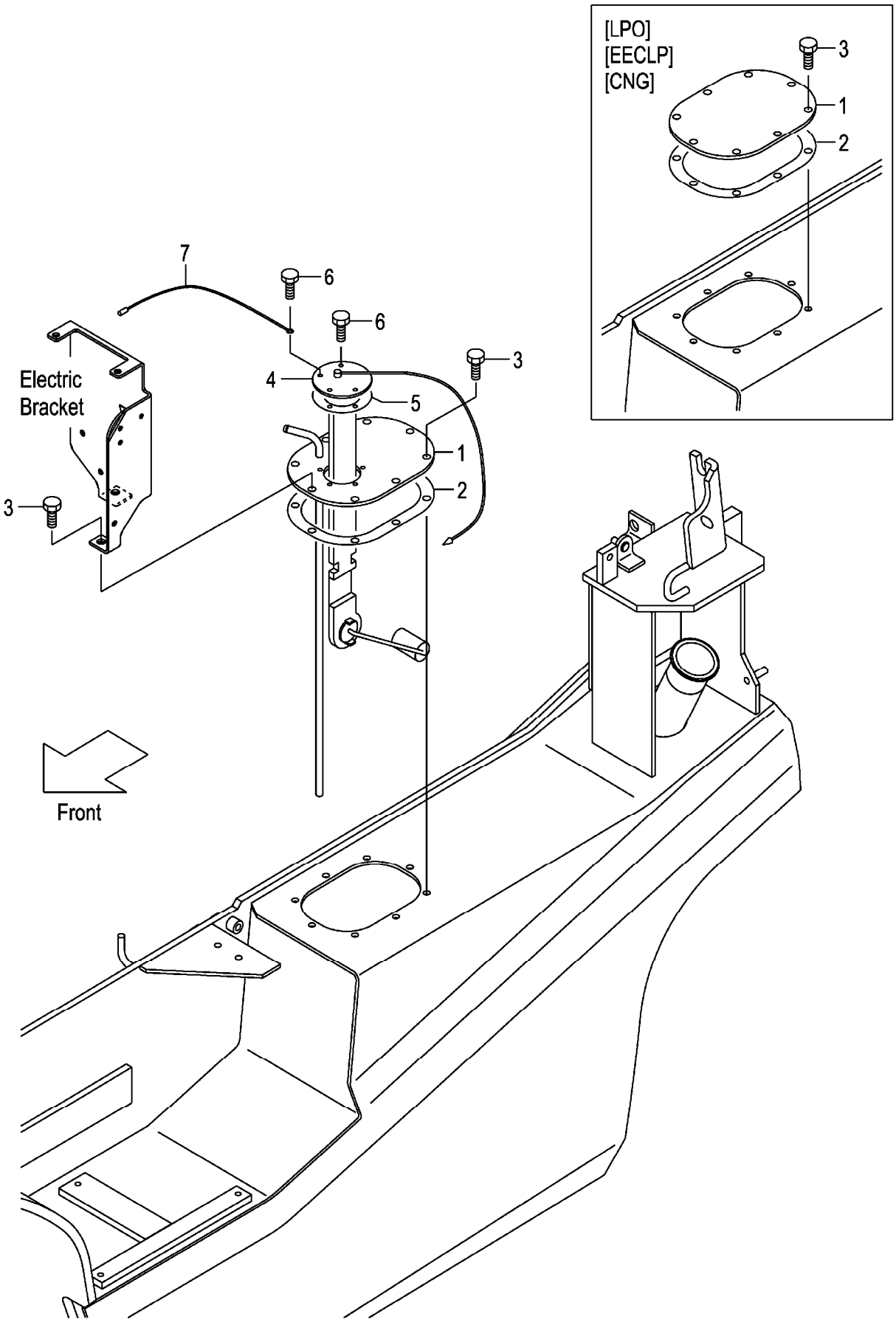

A:FG20C13 FG20T13 FG25C13 FG25T13
B:FG20C3 FG20T3 FG25C3 FG25T3 FG20W3 FG25W3

| Item No | Part No. | Mark | Description | | Req'd | Remarks : Serial No. |
|---|---|---|---|---|---|---|
| 1 | 22B52-22101 | | PLATE,FUEL-TOP | ﾌﾟﾚｰﾄ | 1 | |
| - | 52E00-53051 | | PLATE,FUEL-TOP | ﾌﾟﾚｰﾄ | 1 | [LPO][EECLP][CNG] |
| 2 | 22N52-22201 | | PACKING | ﾊﾟｯｷﾝｸﾞ | 1 | |
| 3 | 229F2-22151 | | BOLT | ﾎﾞﾙﾄ | 8 | |
| 4 | 222A2-22061 | | GAUGE,FUEL | ｹﾞｰｼﾞ | 1 | (WITHOUT LPO,EECLP,CNG) |
| 5 | 229F2-22071 | | GASKET | ｶﾞｽｹｯﾄ | 1 | (WITHOUT LPO,EECLP,CNG) |
| 6 | 229F2-22171 | | BOLT | ﾎﾞﾙﾄ | 5 | (WITHOUT LPO,EECLP,CNG) |
| 7 | 25592-42121 | | WIRE | ﾜｲﾔ | 1 | (WITHOUT LPO,EECLP,CNG) |

# FIG.151 FUEL TANK (DIESEL)

(F7026150) フューエルタンク

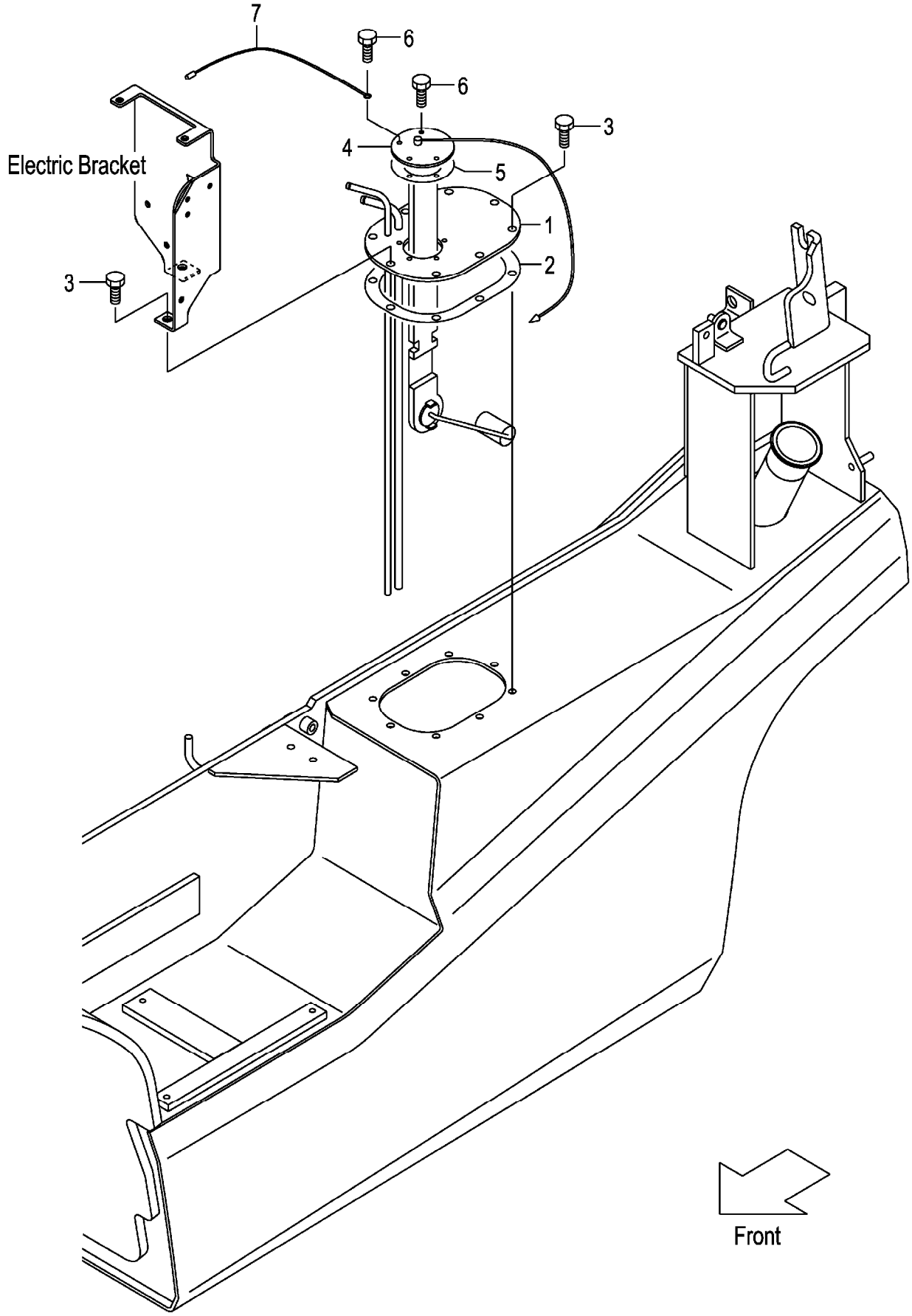

A:FD20C13 FD20T13 FD25C13 FD25T13
B:FD20C3 FD20T3 FD25C3 FD25T3 FD20W3 FD25W3

| Item No | Part No. | Mark | Description | | Req'd | Remarks : Serial No. |
|---|---|---|---|---|---|---|
| 1 | 22N52-22101 | | PLATE,FUEL-TOP | ﾌﾟﾚｰﾄ | 1 | |
| 2 | 22N52-22201 | | PACKING | ﾊﾟｯｷﾝｸﾞ | 1 | |
| 3 | 229F2-22151 | | BOLT | ﾎﾞﾙﾄ | 8 | |
| 4 | 222A2-22061 | | GAUGE,FUEL | ｹﾞｰｼﾞ | 1 | |
| 5 | 229F2-22071 | | GASKET | ｶﾞｽｹｯﾄ | 1 | |
| 6 | 229F2-22171 | | BOLT | ﾎﾞﾙﾄ | 5 | |
| 7 | 25592-42121 | | WIRE | ﾜｲﾔ | 1 | |

# FIG.152 BALANCE WEIGHT

(F7026310) ﾊﾞﾗﾝｽｳｴｲﾄ

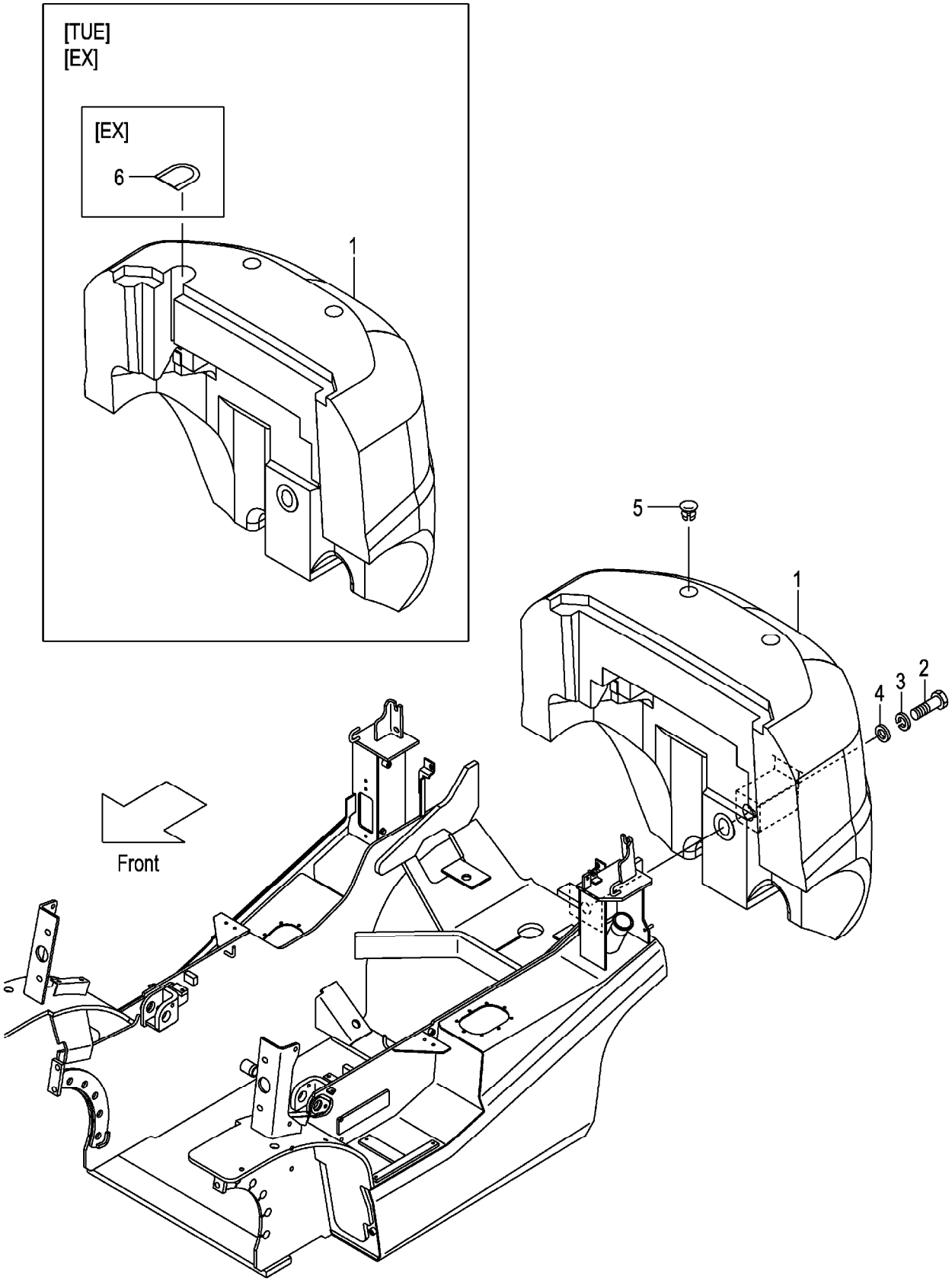

A:FG20C13 FG20T13 D:FG25C3 FG25T3 G:FD20C13 FD20T13 K:FD25C3 FD25T3
B:FG25C13 FG25T13 E:FG20W3 H:FD25C13 FD25T13 L:FD20W3
C:FG20C3 FG20T3 F:FG25W3 J:FD20C3 FD20T3 M:FD25W3

**FIG.152**
(F7026310)

| Item No | Part No. | Mark | Description | | Req'd | Remarks : Serial No. |
|---|---|---|---|---|---|---|
| 1 | NO PART NO. | # | WEIGHT,BALANCE,2.0 | ｳｴｲﾄ | 1 | A,C,E,G,J,L |
| - | NO PART NO. | # | WEIGHT,BALANCE,2.5 | ｳｴｲﾄ | 1 | B,D,F,H,K,M |
| 2 | 01110-30150 | | BOLT | ﾎﾞﾙﾄ | 1 | |
| 3 | 02010-00030 | | WASHER | ﾜｯｼｬ | 1 | |
| 4 | 234A6-32001 | | WASHER | ﾜｯｼｬ | 1 | |
| 5 | 22N56-32041 | | CAP | ｷｬｯﾌﾟ | 2 | |
| 6 | 516G2-72051 | | COVER | ｶﾊﾞｰ | 1 | C,D,J,K |
| | | | | | | [EX] |

# FIG.153 BALANCE WEIGHT [HC]

(F7026320) ﾊﾞﾗﾝｽｳｴｲﾄ

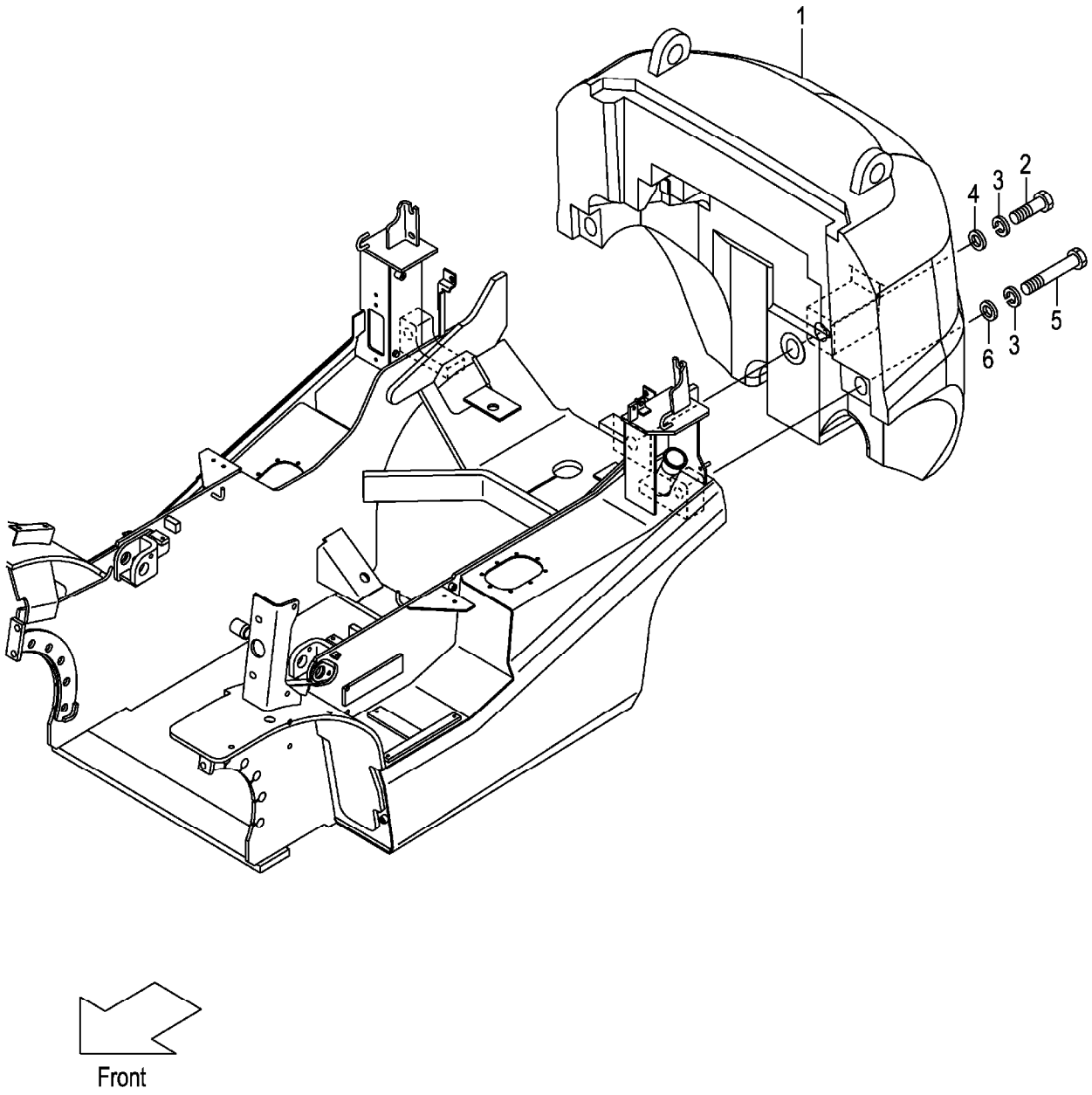

A:FG20C13 FG20T13 D:FG25C3 FG25T3 G:FD20C13 FD20T13 K:FD25C3 FD25T3
B:FG25C13 FG25T13 E:FG20W3 H:FD25C13 FD25T13 L:FD20W3
C:FG20C3 FG20T3 F:FG25W3 J:FD20C3 FD20T3 M:FD25W3

**FIG.153**
(F7026320)

| Item No | Part No. | Mark | Description | | Req'd | Remarks : Serial No. |
|---|---|---|---|---|---|---|
| 1 | NO PART NO. | # | WEIGHT,BALANCE,2.0 | ｳｴｲﾄ | 1 | A,C,E,G,J,L<br>[HC] |
| - | NO PART NO. | # | WEIGHT,BALANCE,2.5 | ｳｴｲﾄ | 1 | B,D,F,H,K,M<br>[HC] |
| 2 | 01110-30150 | | BOLT | ﾎﾞﾙﾄ | 1 | [HC] |
| 3 | 02010-00030 | | WASHER | ﾜｯｼｬ | 3 | [HC] |
| 4 | 234A6-32001 | | WASHER | ﾜｯｼｬ | 1 | [HC] |
| 5 | 01113-30200 | | BOLT | ﾎﾞﾙﾄ | 2 | A,C,E,G,J,L<br>[HC] |
| - | 01113-30250 | | BOLT | ﾎﾞﾙﾄ | 2 | B,D,F,H,K,M<br>[HC] |
| 6 | 225R6-32001 | | WASHER | ﾜｯｼｬ | 2 | [HC] |
| 7 | 225R9-12101 | + | DECAL,HOOK-CAUTION | ﾃﾞｶﾙ | 1 | [HC] |

# FIG.154 FRONT GUARD

(F7026410) フロントガード

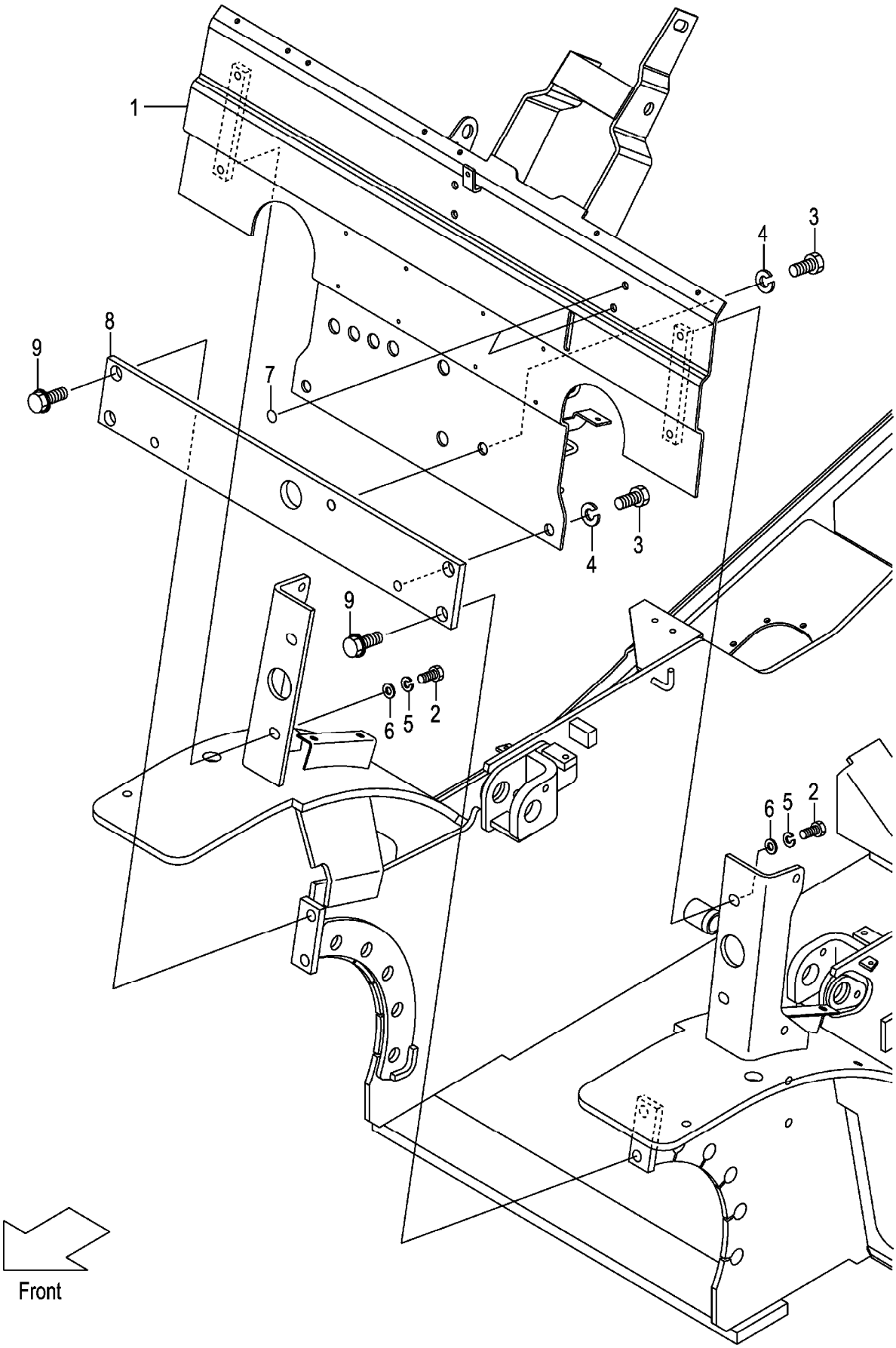

A:FG20C13 FG20T13 FG25C13 FG25T13 C:FD20C13 FD20T13 FD25C13 FD25T13 (F7026410)
B:FG20C3 FG20T3 FG25C3 FG25T3 FG20W3 FG25W3 D:FD20C3 FD20T3 FD25C3 FD25T3 FD20W3 FD25W3

| Item No | Part No. | Mark | Description | | Req'd | Remarks : Serial No. |
|---|---|---|---|---|---|---|
| 1 | 22N56-40101 | | GUARD,FRONT | ｶﾞｰﾄﾞ | 1 | |
| 2 | 01186-12025 | | BOLT | ﾎﾞﾙﾄ | 4 | |
| - | 01109-12025 | | BOLT,STAINLESS | ﾎﾞﾙﾄ | 4 | [FC] |
| 3 | 01100-16020 | | BOLT | ﾎﾞﾙﾄ | 3 | |
| 4 | 02010-00016 | | WASHER | ﾜｯｼｬ | 3 | |
| 5 | 02013-00012 | | WASHER | ﾜｯｼｬ | 4 | [FC] |
| 6 | 02001-00012 | | WASHER | ﾜｯｼｬ | 4 | [FC] |
| 7 | 22N55-13181 | | SEAL,PANEL-COVER | ｼｰﾙ | 2 | |
| 8 | 22N56-42041 | | PLATE,FRONT | ﾌﾟﾚｰﾄ | 1 | |
| 9 | 216G6-43561 | | BOLT,FLANGE | ﾎﾞﾙﾄ | 4 | |

# FIG.155 BONNET

(F7026420) ﾎﾞﾝﾈｯﾄ

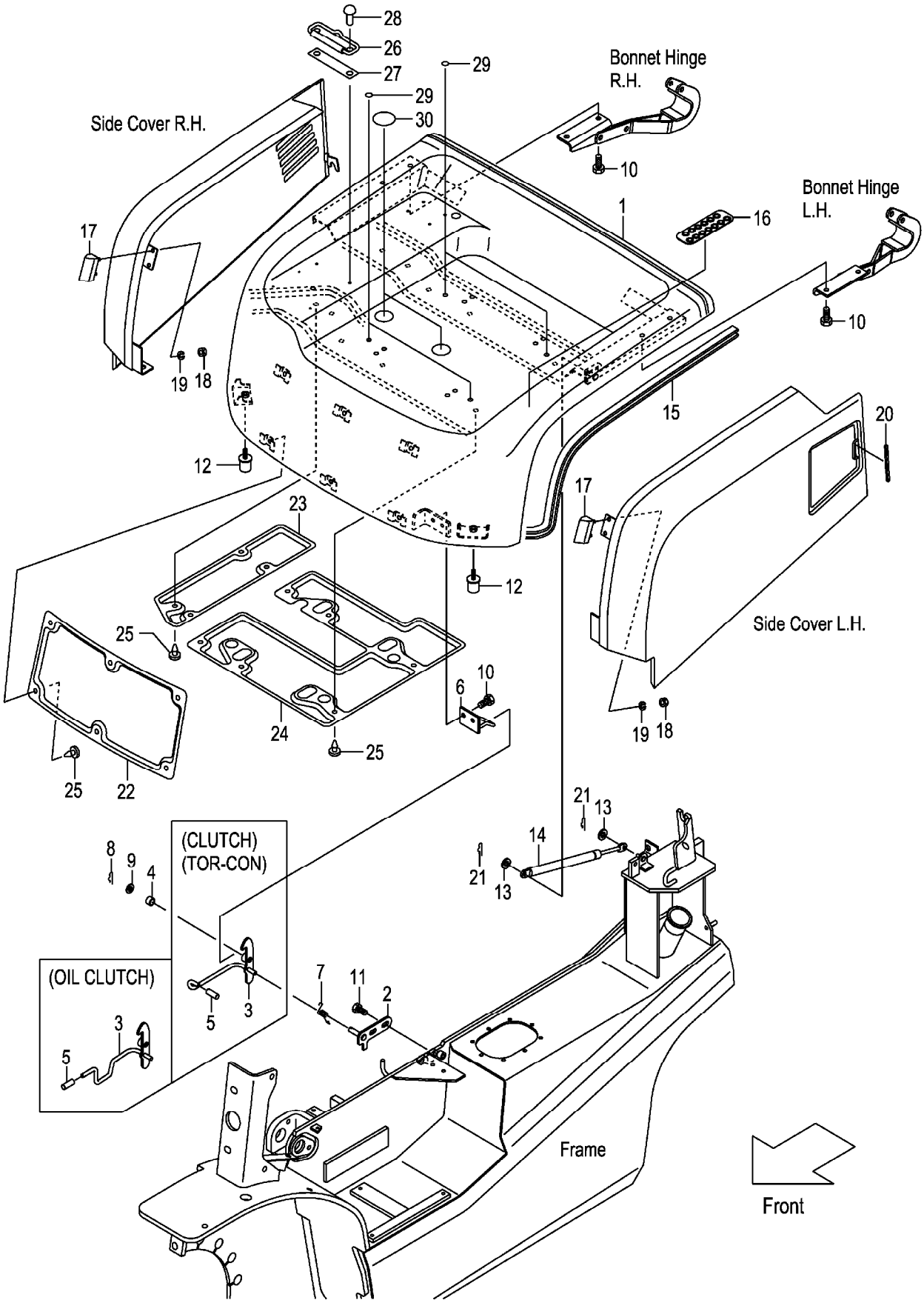

A:FG20C13 FG20T13 FG25C13 FG25T13 D:FD20C13 FD20T13 FD25C13 FD25T13
B:FG20C3 FG20T3 FG25C3 FG25T3 E:FD20C3 FD20T3 FD25C3 FD25T3
C:FG20W3 FG25W3 F:FD20W3 FD25W3

**FIG.155**
(F7026420)

| Item No | Part No. | Mark | Description | | Req'd | Remarks : Serial No. |
|---|---|---|---|---|---|---|
| 1 | 22N56-40202 | | BONNET | ﾎﾞﾝﾈｯﾄ | 1 | |
| - | 52N55-30401 | | BONNET | ﾎﾞﾝﾈｯﾄ | 1 | B,C,E,F |
| | | | | | | [SCB001] |
| - | 52N55-30401 | | BONNET | ﾎﾞﾝﾈｯﾄ | 1 | B,C,E |
| | | | | | | [SCBCR] |
| - | 52N59-20411 | | BONNET | ﾎﾞﾝﾈｯﾄ | 1 | [TOB] |
| A1 | 243C6-40021 | | CATCH-ASSY,BONNET | ﾎﾞﾝﾈｯﾄｷｬｯﾁｱｯｾﾝ | 1 | A,B,D,E |
| | | | | | | INC.2-9 |
| - | 22P46-40021 | | CATCH-ASSY,BONNET | ﾎﾞﾝﾈｯﾄｷｬｯﾁｱｯｾﾝ | 1 | C,F |
| | | | | | | INC.2-9 |
| 2 | NO PART NO. | # | BRACKET,BONNET-CATCH | ﾌﾞﾗｹｯﾄ | 1 | |
| 3 | NO PART NO. | # | LATCH | ﾗｯﾁ | 1 | A,B,D,E |
| - | NO PART NO. | # | LATCH | ﾗｯﾁ | 1 | C,F |
| 4 | 23655-22101 | | BUSHING | ﾌﾞｯｼﾝｸﾞ | 1 | |
| 5 | 216G6-52291 | | CAP | ｷｬｯﾌﾟ | 1 | |
| 6 | 216G6-42451 | | HOOK | ﾌｯｸ | 1 | |
| 7 | 216G6-42481 | | SPRING | ｽﾌﾟﾘﾝｸﾞ | 1 | |
| 8 | 216H5-42141 | | PIN,SNAP | ﾋﾟﾝ | 1 | |
| 9 | 02000-00010 | | WASHER | ﾜｯｼｬ | 1 | |
| 10 | 01183-08016 | | BOLT | ﾎﾞﾙﾄ | 6 | |
| 11 | 01185-08016 | | BOLT | ﾎﾞﾙﾄ | 2 | |
| 12 | 22N56-43051 | | RUBBER,STOPPER | ﾗﾊﾞｰ | 2 | |
| 13 | 02000-00008 | | WASHER | ﾜｯｼｬ | 2 | |
| 14 | 22N56-43041 | | SPRING,GAS | ｽﾌﾟﾘﾝｸﾞ | 1 | |
| 15 | 22N56-40361 | | RUBBER,SEAL,BONNET | ﾗﾊﾞｰ | 1 | |
| 16 | 22N56-43221 | | RUBBER | ﾗﾊﾞｰ | 1 | |
| 17 | 22N56-43281 | | STOPPER,BONNET | ｽﾄｯﾊﾟ | 2 | |
| 18 | 01400-00006 | | NUT | ﾅｯﾄ | 4 | |
| 19 | 02010-00006 | | WASHER | ﾜｯｼｬ | 4 | |
| 20 | 22N56-43271 | | RUBBER | ﾗﾊﾞｰ | 1 | |
| 21 | 216H3-92171 | | PIN,SNAP | ﾋﾟﾝ | 2 | |
| 22 | 22N56-40451 | | INSULATOR,A | ｲﾝｼｭﾚｰﾀ | 1 | |
| 23 | 22N56-40461 | | INSULATOR,B | ｲﾝｼｭﾚｰﾀ | 1 | |
| 24 | 22N56-40471 | | INSULATOR,C | ｲﾝｼｭﾚｰﾀ | 1 | |
| 25 | 216G6-42541 | | CLIP | ｸﾘｯﾌﾟ | 16 | |
| 26 | 25599-32001 | | BINDER | ﾊﾞｲﾝﾀﾞ | 1 | |
| 27 | 25599-32021 | | SHEET,BINDER | ｼｰﾄ | 1 | |
| 28 | 22256-42001 | | RIVET | ﾘﾍﾞｯﾄ | 2 | |
| 29 | 22N56-43531 | | SEAL,PANEL-COVER | ｼｰﾙ | 6 | |
| 30 | 22N56-43541 | | SEAT,BONNET | ｼｰﾄ | 2 | |

# FIG.156 RADIATOR COVER

(F7026430) ﾗｼﾞｴｰﾀｶﾊﾞｰ

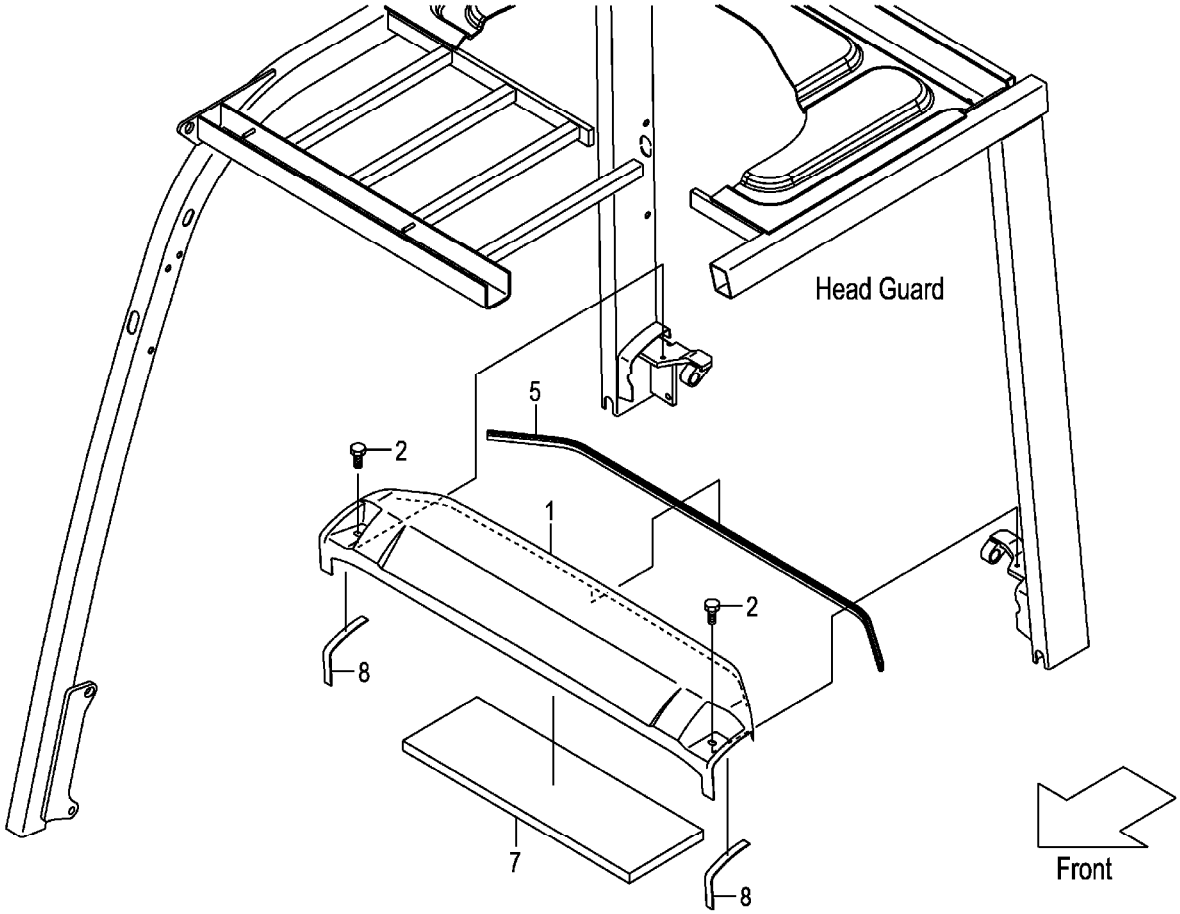


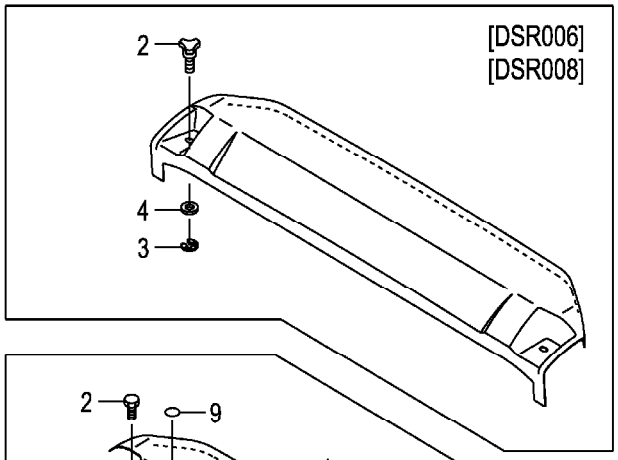


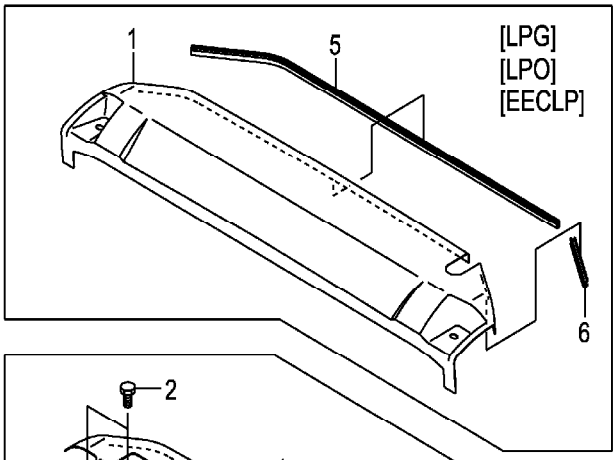


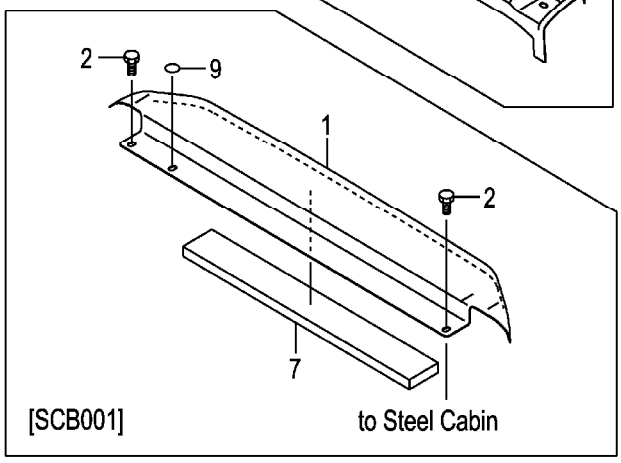


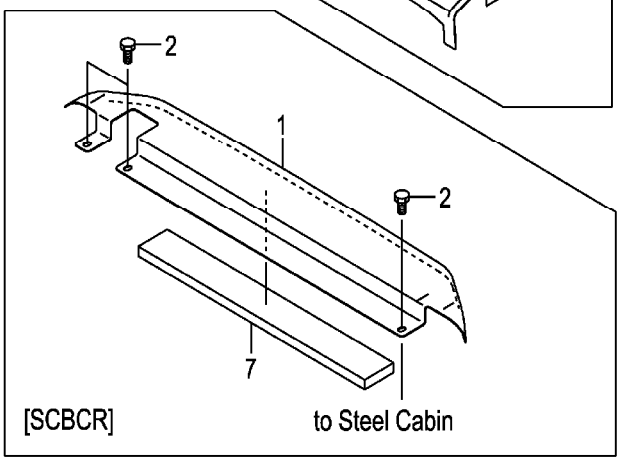

A:FG20C13 FG20T13 FG25C13 FG25T13 D:FD20C13 FD20T13 FD25C13 FD25T13
B:FG20C3 FG20T3 FG25C3 FG25T3 E:FD20C3 FD20T3 FD25C3 FD25T3
C:FG20W3 FG25W3 F:FD20W3 FD25W3

**FIG.156**
(F7026430)

| Item No | Part No. | Mark | Description | | Req'd | Remarks : Serial No. |
|---|---|---|---|---|---|---|
| 1 | 22N56-40302 | | COVER,RADIATOR | ｶﾊﾞｰ | 1 | |
| - | 52N55-40211 | | COVER,RADIATOR | ｶﾊﾞｰ | 1 | [AW061] |
| - | 52E00-52121 | | COVER,RADIATOR | ｶﾊﾞｰ | 1 | A,B,C<br>[LPG][LPO][EECLP] |
| - | 52N55-30451 | | COVER,RADIATOR | ｶﾊﾞｰ | 1 | B,C,E,F<br>[SCB001] |
| - | 52N57-60451 | | COVER,RADIATOR | ｶﾊﾞｰ | 1 | B,C,E<br>[SCBCR] |
| 2 | 01181-08016 | | BOLT | ﾎﾞﾙﾄ | 2 | |
| - | 01181-08016 | | BOLT | ﾎﾞﾙﾄ | 3 | B,C,E<br>[SCBCR] |
| - | 222A6-42451 | | BOLT,KNOB | ﾎﾞﾙﾄ | 2 | [DSR006][DSR008] |
| 3 | 222A6-42461 | | E-RING | Eﾘﾝｸﾞ | 2 | [DSR006][DSR008] |
| 4 | 02000-00008 | | WASHER | ﾜｯｼｬ | 2 | [DSR006][DSR008] |
| 5 | 22N56-40371 | | SEAL,RUBBER | ｼｰﾙ | 1 | |
| - | 518G0-52531 | | SEAL,RUBBER | ｼｰﾙ | 1 | A,B,C<br>[LPG][LPO][EECLP] |
| 6 | 518G0-52541 | | SEAL,RUBBER | ｼｰﾙ | 1 | A,B,C<br>[LPG][LPO][EECLP] |
| 7 | 22N56-40401 | | RUBBER,RAD-COVER | ﾗﾊﾞｰ | 1 | |
| - | 52N55-32171 | | RUBBER,RAD-COVER | ﾗﾊﾞｰ | 1 | B,C,E,F<br>[SCB001] |
| - | 52N55-32171 | | RUBBER,RAD-COVER | ﾗﾊﾞｰ | 1 | B,C,E<br>[SCBCR] |
| 8 | 234A6-43121 | | RUBBER | ﾗﾊﾞｰ | 2 | (WITHOUT SCB001,SCBCR) |
| 9 | 22N56-43531 | | SEAL,PANEL-COVER | ｼｰﾙ | 1 | B,C,E,F<br>[SCB001] |

# FIG.157 BONNET HINGE

(F7026440) ﾎﾞﾝﾈｯﾄﾋﾝｼﾞ

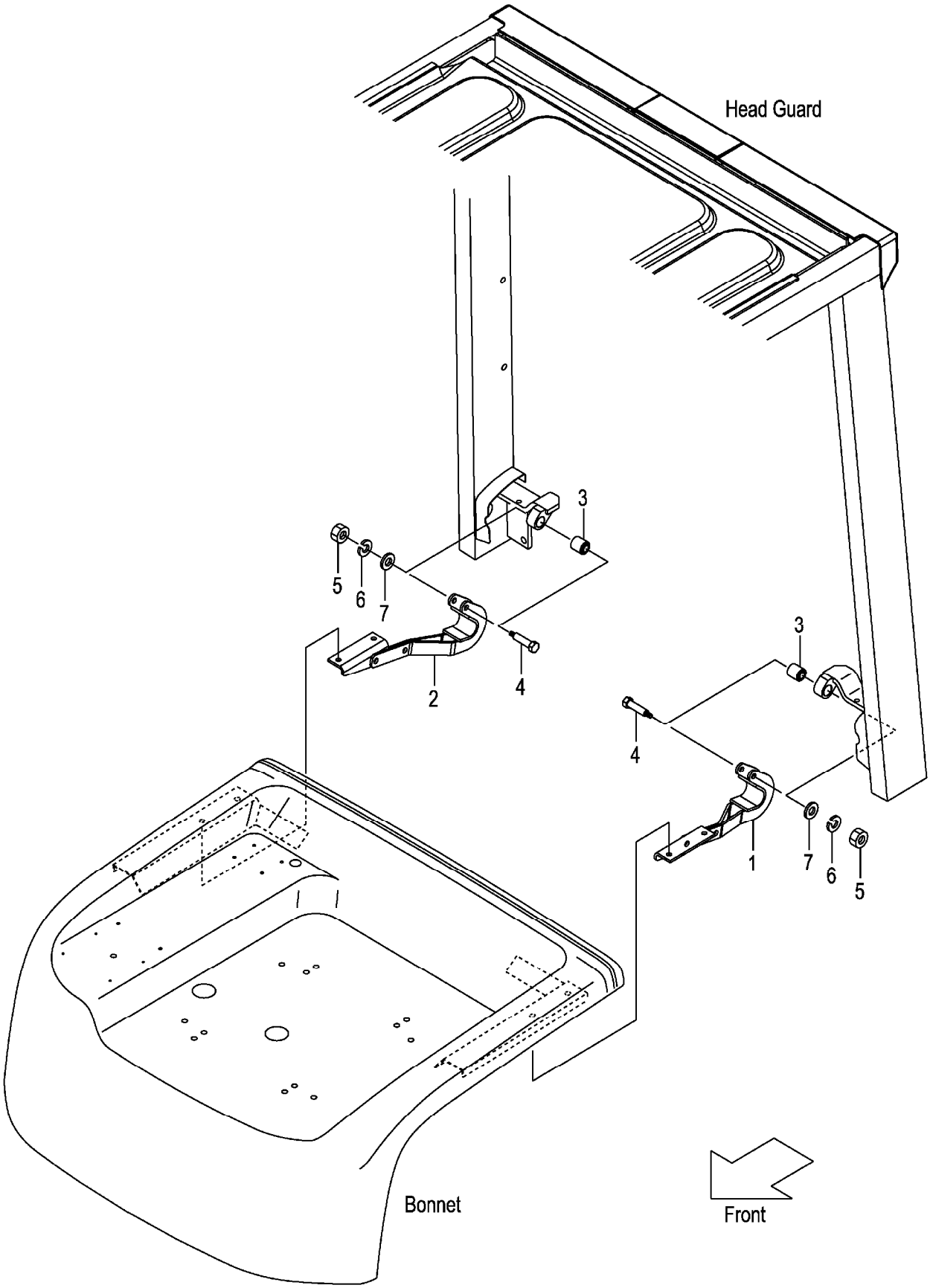

A:FG20C13 FG20T13 FG25C13 FG25T13 C:FD20C13 FD20T13 FD25C13 FD25T13 (F7026440)
B:FG20C3 FG20T3 FG25C3 FG25T3 FG20W3 FG25W3 D:FD20C3 FD20T3 FD25C3 FD25T3 FD20W3 FD25W3

| Item No | Part No. | Mark | Description | | Req'd | Remarks : Serial No. |
|---|---|---|---|---|---|---|
| 1 | 22N56-42602 | | HINGE,LH | ﾋﾝｼﾞ | 1 | |
| 2 | 22N56-42612 | | HINGE,RH | ﾋﾝｼﾞ | 1 | |
| 3 | 216G6-42921 | | BUSHING | ﾌﾞｯｼﾝｸﾞ | 2 | |
| 4 | 216G6-42931 | | BOLT | ﾎﾞﾙﾄ | 2 | |
| 5 | 01400-00006 | | NUT | ﾅｯﾄ | 2 | |
| 6 | 02010-00006 | | WASHER | ﾜｯｼｬ | 2 | |
| 7 | 02000-00006 | | WASHER | ﾜｯｼｬ | 2 | |

# FIG.158 FLOOR BOARD

(F7026450) フロアボード

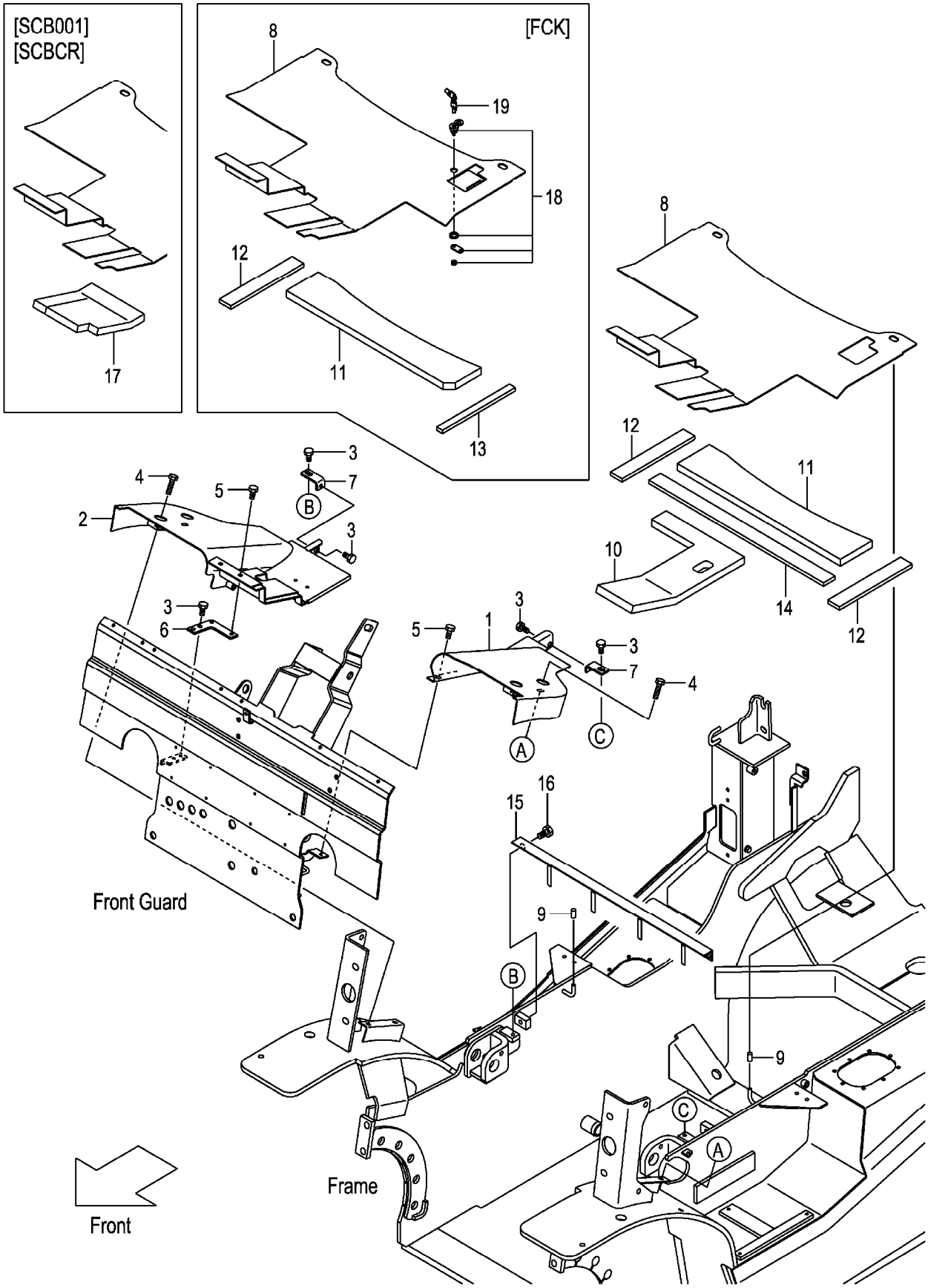

A:FG20C13 FG20T13 FG25C13 FG25T13 D:FD20C13 FD20T13 FD25C13 FD25T13
B:FG20C3 FG20T3 FG25C3 FG25T3 E:FD20C3 FD20T3 FD25C3 FD25T3
C:FG20W3 FG25W3 F:FD20W3 FD25W3

**FIG.158**
(F7026450)

| Item No | Part No. | Mark | Description | | Req'd | Remarks : Serial No. |
|---|---|---|---|---|---|---|
| 1 | 22N56-50201 | | COVER,LH | ｶﾊﾞｰ | 1 | |
| 2 | 22N56-50211 | | COVER,RH | ｶﾊﾞｰ | 1 | |
| 3 | 01185-08016 | | BOLT | ﾎﾞﾙﾄ | 6 | |
| 4 | 01185-08030 | | BOLT | ﾎﾞﾙﾄ | 4 | |
| 5 | 273A6-42471 | | BOLT | ﾎﾞﾙﾄ | 3 | |
| 6 | 22N56-52251 | | BRACKET | ﾌﾞﾗｹｯﾄ | 1 | |
| 7 | 22N56-52241 | | BRACKET | ﾌﾞﾗｹｯﾄ | 2 | |
| 8 | 22N56-52201 | | BOARD,FLOOR | ﾎﾞｰﾄﾞ | 1 | |
| - | 52N58-10201 | | BOARD,FLOOR | ﾎﾞｰﾄﾞ | 1 | [FCK] |
| 9 | 216G6-52291 | | CAP | ｷｬｯﾌﾟ | 2 | |
| 10 | 22N56-52222 | | RUBBER,FLOOR-BOARD | ﾗﾊﾞｰ | 1 | |
| 11 | 22N56-52231 | | RUBBER,FLOOR-BOARD | ﾗﾊﾞｰ | 1 | |
| - | 52N58-12201 | | RUBBER,FLOOR-BOARD | ﾗﾊﾞｰ | 1 | [FCK] |
| 12 | 22N56-52351 | | RUBBER | ﾗﾊﾞｰ | 2 | |
| - | 22N56-52351 | | RUBBER | ﾗﾊﾞｰ | 1 | [FCK] |
| 13 | 216G6-52161 | | RUBBER | ﾗﾊﾞｰ | 1 | [FCK] |
| 14 | 22N56-52361 | | RUBBER | ﾗﾊﾞｰ | 1 | |
| 15 | 22N56-52402 | | ANGLE | ｱﾝｸﾞﾙ | 1 | |
| 16 | 01185-10016 | | BOLT | ﾎﾞﾙﾄ | 2 | |
| 17 | 52N55-32331 | | RUBBER,FLOOR-BOARD | ﾗﾊﾞｰ | 1 | B,C,E,F<br>[SCB001] |
| - | 52N55-32331 | | RUBBER,FLOOR-BOARD | ﾗﾊﾞｰ | 1 | B,C,E<br>[SCBCR] |
| A1 | 52N58-10301 | | LOCK-ASSY,COIN | ﾛｯｸｱｯｾﾝ | 1 | [FCK] INC.18,19 |
| 18 | 52N58-12501 | | CYL,KEY | ｼﾘﾝﾀﾞ | 1 | [FCK] |
| 19 | 52N58-12511 | | KEY | ｷｰ | 1 | [FCK](1SET=2PCS) |

# FIG.159 STEP & FLOOR MAT

(F7026460) ｽﾃｯﾌﾟ&ﾌﾛｱﾏｯﾄ

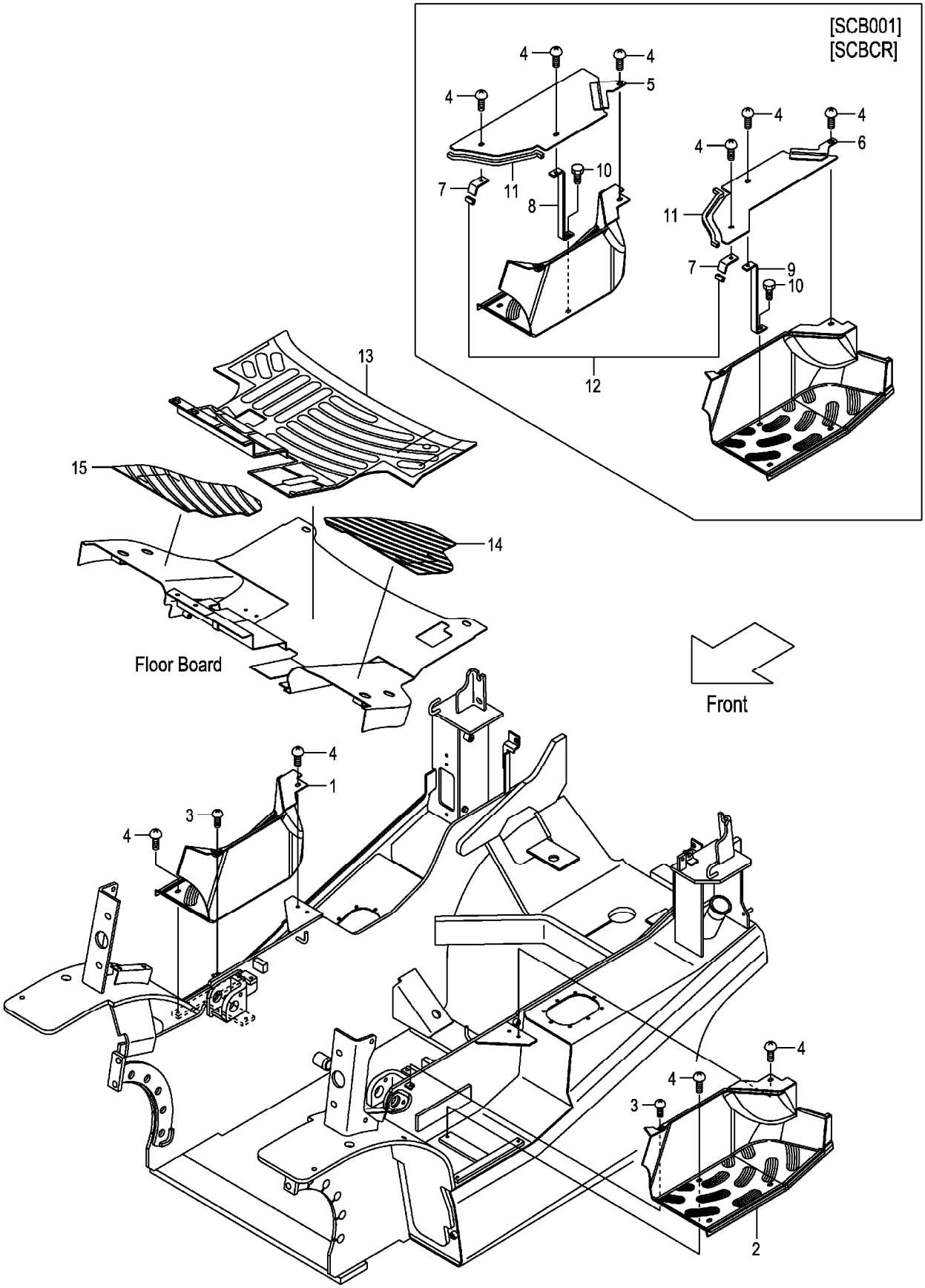

A:FG20C13 FG20T13 FG25C13 FG25T13 D:FD20C13 FD20T13 FD25C13 FD25T13
B:FG20C3 FG20T3 FG25C3 FG25T3 E:FD20C3 FD20T3 FD25C3 FD25T3
C:FG20W3 FG25W3 F:FD20W3 FD25W3

**FIG.159**
(F7026460)

| Item No | Part No. | Mark | Description | | Req'd | Remarks : Serial No. |
|---|---|---|---|---|---|---|
| 1 | 22N56-42901 | | COVER,STEP,RH | ｶﾊﾞｰ | 1 | (WITHOUT HR) |
| - | 52N55-42601 | | COVER,STEP,RH | ｶﾊﾞｰ | 1 | [AW061] |
| 2 | 22N56-42911 | | COVER,STEP,LH | ｶﾊﾞｰ | 1 | |
| - | 52N55-42611 | | COVER,STEP,LH | ｶﾊﾞｰ | 1 | [AW061] |
| 3 | 214A6-42771 | | SCREW | ｽｸﾘｭ | 2 | |
| - | 214A6-42771 | | SCREW | ｽｸﾘｭ | 1 | [HR] |
| 4 | 278M6-42031 | | SCREW | ｽｸﾘｭ | 8 | |
| - | 278M6-42031 | | SCREW | ｽｸﾘｭ | 4 | [HR] |
| - | 278M6-42031 | | SCREW | ｽｸﾘｭ | 10 | B,C,E,F [SCB001] |
| - | 278M6-42031 | | SCREW | ｽｸﾘｭ | 10 | B,C,E [SCBCR] |
| - | 278M6-42031 | | SCREW | ｽｸﾘｭ | 5 | B,C,E,F [HR/SCB001] |
| - | 278M6-42031 | | SCREW | ｽｸﾘｭ | 5 | B,C,E [HR/SCBCR] |
| 5 | 52N55-32051 | | PLATE,STEP,RH | ﾌﾟﾚｰﾄ | 1 | B,C,E,F [SCB001](WITHOUT HR/SCB001) |
| - | 52N55-32051 | | PLATE,STEP,RH | ﾌﾟﾚｰﾄ | 1 | B,C,E [SCBCR](WITHOUT HR/SCBCR) |
| 6 | 52N55-32061 | | PLATE,STEP,LH | ﾌﾟﾚｰﾄ | 1 | B,C,E,F [SCB001] |
| - | 52N55-32061 | | PLATE,STEP,LH | ﾌﾟﾚｰﾄ | 1 | B,C,E [SCBCR] |
| 7 | 52N55-32091 | | BRACKET | ﾌﾞﾗｹｯﾄ | 2 | B,C,E,F [SCB001] |
| - | 52N55-32091 | | BRACKET | ﾌﾞﾗｹｯﾄ | 2 | B,C,E [SCBCR] |
| - | 52N55-32091 | | BRACKET | ﾌﾞﾗｹｯﾄ | 1 | B,C,E,F [HR/SCB001] |
| - | 52N55-32091 | | BRACKET | ﾌﾞﾗｹｯﾄ | 1 | B,C,E [HR/SCBCR] |
| 8 | 52N55-32101 | | BRACKET,RH | ﾌﾞﾗｹｯﾄ | 1 | B,C,E,F [SCB001](WITHOUT HR/SCB001) |
| - | 52N55-32101 | | BRACKET,RH | ﾌﾞﾗｹｯﾄ | 1 | B,C,E [SCBCR](WITHOUT HR/SCBCR) |
| 9 | 52N55-32111 | | BRACKET,LH | ﾌﾞﾗｹｯﾄ | 1 | B,C,E,F [SCB001] |
| - | 52N55-32111 | | BRACKET,LH | ﾌﾞﾗｹｯﾄ | 1 | B,C,E [SCBCR] |
| 10 | 216H3-92281 | | BOLT | ﾎﾞﾙﾄ | 2 | B,C,E,F [SCB001] |
| - | 216H3-92281 | | BOLT | ﾎﾞﾙﾄ | 2 | B,C,E [SCBCR] |
| - | 216H3-92281 | | BOLT | ﾎﾞﾙﾄ | 1 | B,C,E,F [HR/SCB001] |
| - | 216H3-92281 | | BOLT | ﾎﾞﾙﾄ | 1 | B,C,E [HR/SCBCR] |
| 11 | 509S3-92261 | | RUBBER,SEAL | ﾗﾊﾞｰ | 2 | B,C,E,F [SCB001] |

# FIG.159 STEP & FLOOR MAT

(F7026460) ｽﾃｯﾌﾟ&ﾌﾛｱﾏｯﾄ

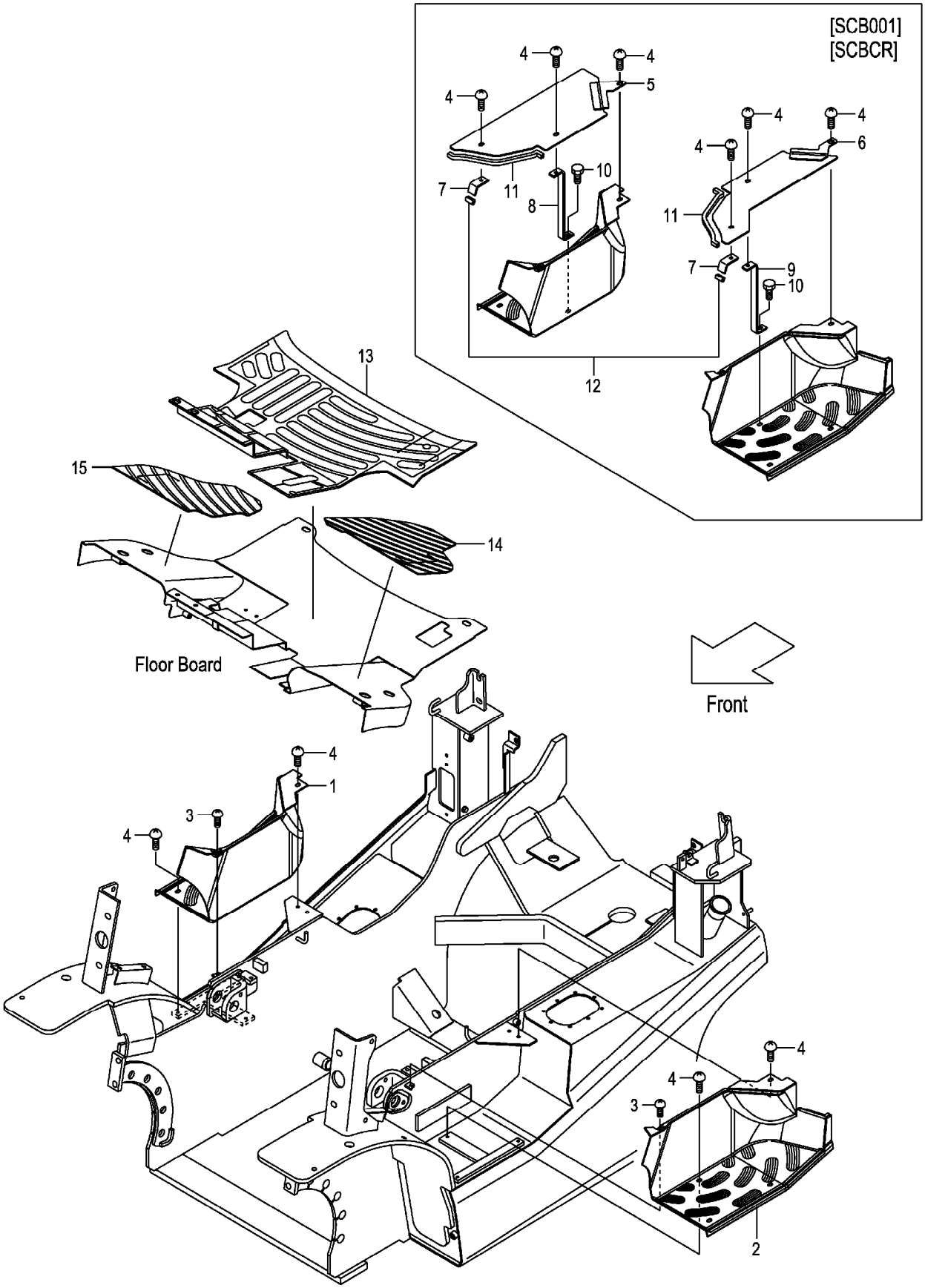

A:FG20C13 FG20T13 FG25C13 FG25T13 D:FD20C13 FD20T13 FD25C13 FD25T13
B:FG20C3 FG20T3 FG25C3 FG25T3 E:FD20C3 FD20T3 FD25C3 FD25T3
C:FG20W3 FG25W3 F:FD20W3 FD25W3

**FIG.159**
(F7026460)

| Item No | Part No. | Mark | Description | | Req'd | Remarks : Serial No. |
|---|---|---|---|---|---|---|
| - | 509S3-92261 | | RUBBER,SEAL | ﾗﾊﾞｰ | 2 | B,C,E<br>[SCBCR] |
| - | 509S3-92261 | | RUBBER,SEAL | ﾗﾊﾞｰ | 1 | B,C,E,F<br>[HR/SCB001] |
| - | 509S3-92261 | | RUBBER,SEAL | ﾗﾊﾞｰ | 1 | B,C,E<br>[HR/SCBCR] |
| 12 | 209P6-42831 | | EDGING | ｴｯｼﾞﾝｸﾞ | 1 | B,C,E,F<br>[SCB001] |
| - | 209P6-42831 | | EDGING | ｴｯｼﾞﾝｸﾞ | 1 | B,C,E<br>[SCBCR] |
| 13 | 22N56-52302 | | MAT,FLOOR | ﾏｯﾄ | 1 | |
| - | 52N58-10311 | | MAT,FLOOR | ﾏｯﾄ | 1 | [FCK] |
| 14 | 22N56-52311 | | MAT,FLOOR,LH | ﾏｯﾄ | 1 | |
| 15 | 22N56-52321 | | MAT,FLOOR,RH | ﾏｯﾄ | 1 | |

# M E M O

# M E M O

# FIG.160 FRONT COVER (CLUTCH)(OIL CLUTCH)

(F7026470) フロントカバー

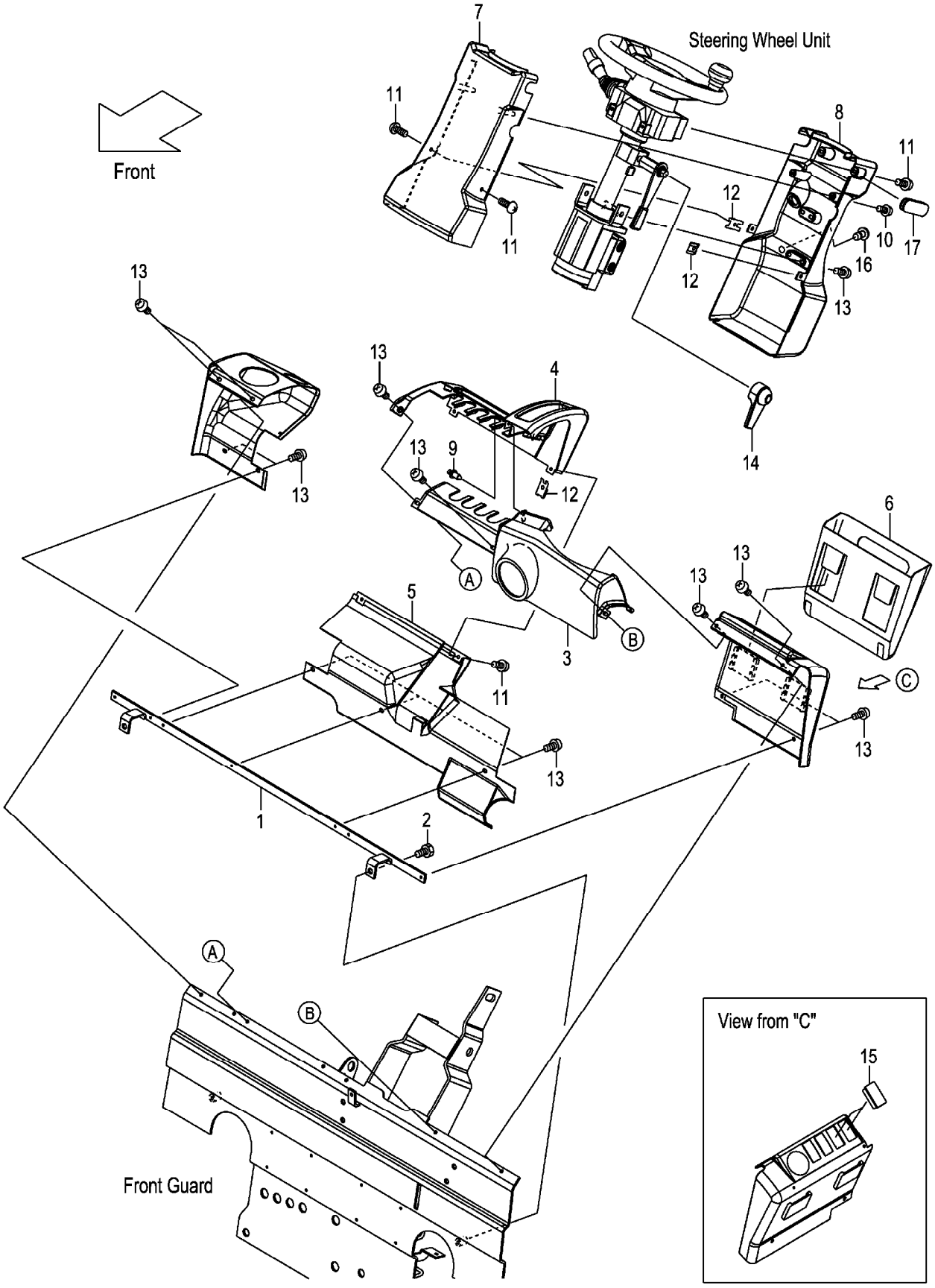

A:FG20C13 FG25C13 D:FD20C13 FD25C13
B:FG20C3 FG25C3 E:FD20C3 FD25C3
C:FG20W3 FG25W3 F:FD20W3 FD25W3

**FIG.160**
(F7026470)

| Item No | Part No. | Mark | Description | | Req'd | Remarks : Serial No. |
|---|---|---|---|---|---|---|
| 1 | 22N56-42861 | | BRACKET,COVER | ﾌﾞﾗｹｯﾄ | 1 | |
| 2 | 01185-08016 | | BOLT | ﾎﾞﾙﾄ | 2 | |
| 3 | 22N56-42741 | | COVER,FRONT | ｶﾊﾞｰ | 1 | |
| 4 | 22N56-42701 | | COVER,METER-PANEL | ｶﾊﾞｰ | 1 | |
| 5 | 22N56-42731 | | COVER,LOWER | ｶﾊﾞｰ | 1 | |
| 6 | 22N56-42751 | | POCKET,BINDER | ﾎﾟｹｯﾄ | 1 | |
| 7 | 22N54-12321 | | COVER,HANDLE,FRONT | ｶﾊﾞｰ | 1 | |
| 8 | 22N54-12311 | | COVER,HANDLE,REAR | ｶﾊﾞｰ | 1 | |
| - | 52N57-72001 | | COVER,HANDLE,REAR | ｶﾊﾞｰ | 1 | [SWD] |
| 9 | 22N56-42791 | | RIVET,PUSH | ﾘﾍﾞｯﾄ | 1 | |
| 10 | 222A2-42031 | | SCREW | ｽｸﾘｭ | 2 | |
| 11 | 209K2-43001 | | SCREW | ｽｸﾘｭ | 6 | |
| 12 | 281E6-42521 | | NUT,SPEED | ﾅｯﾄ | 4 | |
| 13 | 225R6-42031 | | SCREW | ｽｸﾘｭ | 15 | |
| 14 | 22N54-12201 | | COVER,TILT-LOCK | ｶﾊﾞｰ | 1 | |
| 15 | 256T2-42121 | | CAP | ｷｬｯﾌﾟ | 2 | |
| 16 | 281E6-42571 | | PLUG,HOLE | ﾌﾟﾗｸﾞ | 1 | |
| 17 | 239A4-12541 | | GROMMET,HANDLE-COVER | ｸﾞﾛﾒｯﾄ | 1 | |

# FIG.161 FRONT COVER (TOR-CON)

(F7026480) フロントカバー

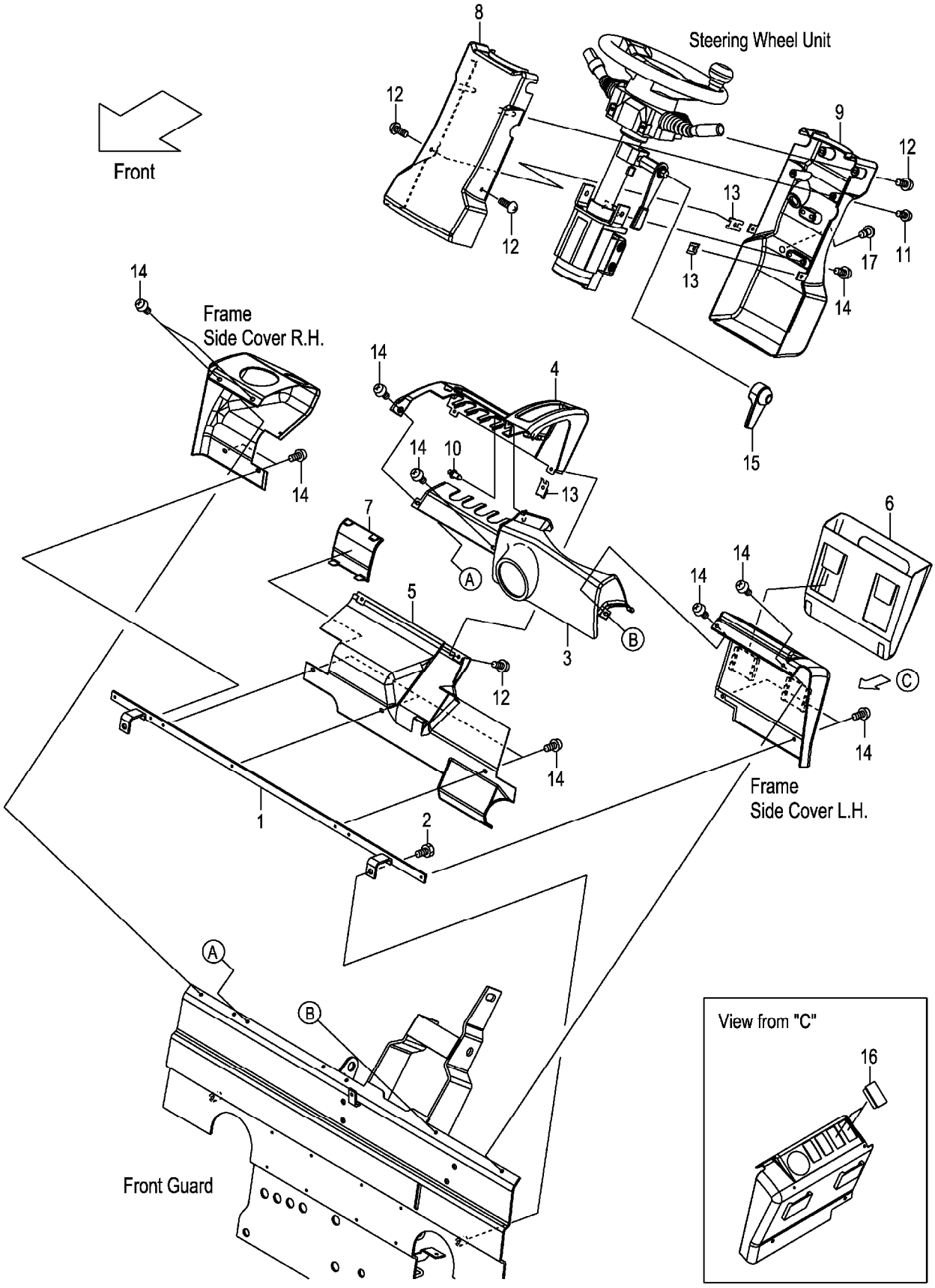

A:FG20T13 FG25T13 C:FD20T13 FD25T13
B:FG20T3 FG25T3 D:FD20T3 FD25T3

| Item No | Part No. | Mark | Description | | Req'd | Remarks : Serial No. |
|---|---|---|---|---|---|---|
| 1 | 22N56-42861 | | BRACKET,COVER | ﾌﾞﾗｹｯﾄ | 1 | |
| 2 | 01185-08016 | | BOLT | ﾎﾞﾙﾄ | 2 | |
| 3 | 22N56-42741 | | COVER,FRONT | ｶﾊﾞｰ | 1 | |
| 4 | 22N56-42701 | | COVER,METER-PANEL | ｶﾊﾞｰ | 1 | |
| 5 | 22N56-42731 | | COVER,LOWER | ｶﾊﾞｰ | 1 | |
| 6 | 22N56-42751 | | POCKET,BINDER | ﾎﾟｹｯﾄ | 1 | |
| 7 | 22N56-42771 | | COVER,CHANGE-LEVER | ｶﾊﾞｰ | 1 | |
| 8 | 22N54-12321 | | COVER,HANDLE,FRONT | ｶﾊﾞｰ | 1 | |
| 9 | 22N54-12311 | | COVER,HANDLE,REAR | ｶﾊﾞｰ | 1 | |
| - | 52N57-72001 | | COVER,HANDLE,REAR | ｶﾊﾞｰ | 1 | [SWD] |
| 10 | 22N56-42791 | | RIVET,PUSH | ﾘﾍﾞｯﾄ | 1 | |
| 11 | 222A2-42031 | | SCREW | ｽｸﾘｭ | 2 | |
| 12 | 209K2-43001 | | SCREW | ｽｸﾘｭ | 6 | |
| 13 | 281E6-42521 | | NUT,SPEED | ﾅｯﾄ | 4 | |
| 14 | 225R6-42031 | | SCREW | ｽｸﾘｭ | 15 | |
| 15 | 22N54-12201 | | COVER,TILT-LOCK | ｶﾊﾞｰ | 1 | |
| 16 | 256T2-42121 | | CAP | ｷｬｯﾌﾟ | 2 | |
| 17 | 281E6-42571 | | PLUG,HOLE | ﾌﾟﾗｸﾞ | 1 | |

# FIG.162 FRONT COVER (TOR-CON):[EXN]

(F7026490) フロントカバー

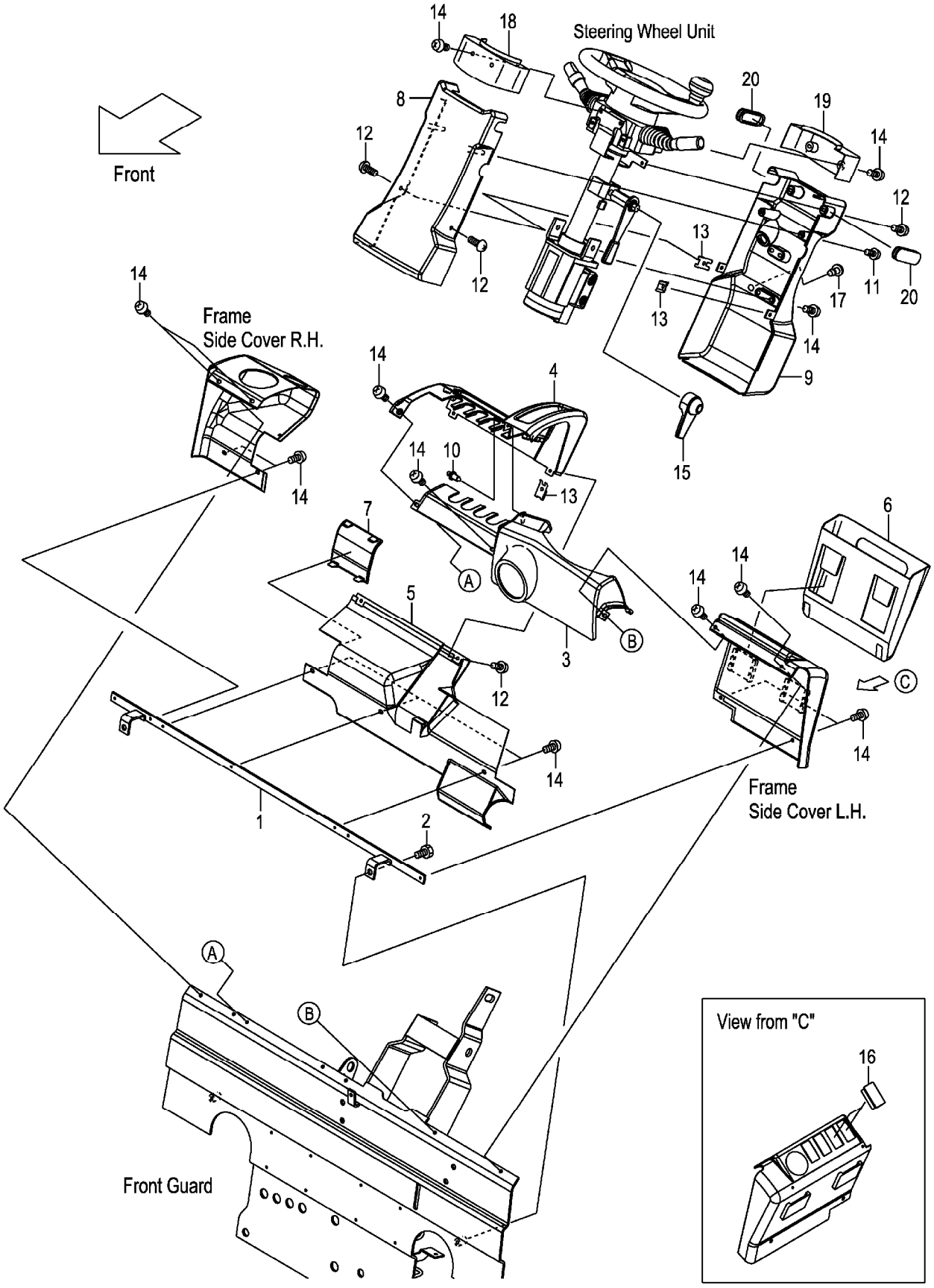

A:FG20T3 FG25T3
B:FD20T3 FD25T3

| Item No | Part No. | Mark | Description | | Req'd | Remarks : Serial No. |
|---|---|---|---|---|---|---|
| 1 | 22N56-42861 | | BRACKET,COVER | ﾌﾞﾗｹｯﾄ | 1 | [EXN] |
| 2 | 01185-08016 | | BOLT | ﾎﾞﾙﾄ | 2 | [EXN] |
| 3 | 22N56-42741 | | COVER,FRONT | ｶﾊﾞｰ | 1 | [EXN] |
| 4 | 22N56-42701 | | COVER,METER-PANEL | ｶﾊﾞｰ | 1 | [EXN] |
| 5 | 22N56-42731 | | COVER,LOWER | ｶﾊﾞｰ | 1 | [EXN] |
| 6 | 22N56-42751 | | POCKET,BINDER | ﾎﾟｹｯﾄ | 1 | [EXN] |
| 7 | 22N56-42771 | | COVER,CHANGE-LEVER | ｶﾊﾞｰ | 1 | [EXN] |
| 8 | 52N52-62011 | | COVER,HANDLE,FRONT | ｶﾊﾞｰ | 1 | [EXN] |
| 9 | 52N52-62001 | | COVER,HANDLE,REAR | ｶﾊﾞｰ | 1 | [EXN] |
| 10 | 22N56-42791 | | RIVET,PUSH | ﾘﾍﾞｯﾄ | 1 | [EXN] |
| 11 | 222A2-42031 | | SCREW | ｽｸﾘｭ | 2 | [EXN] |
| 12 | 209K2-43001 | | SCREW | ｽｸﾘｭ | 6 | [EXN] |
| 13 | 281E6-42521 | | NUT,SPEED | ﾅｯﾄ | 4 | [EXN] |
| 14 | 225R6-42031 | | SCREW | ｽｸﾘｭ | 19 | [EXN] |
| 15 | 22N54-12201 | | COVER,TILT-LOCK | ｶﾊﾞｰ | 1 | [EXN] |
| 16 | 256T2-42121 | | CAP | ｷｬｯﾌﾟ | 2 | [EXN] |
| 17 | 281E6-42571 | | PLUG,HOLE | ﾌﾟﾗｸﾞ | 1 | [EXN] |
| 18 | 52N52-62301 | | COVER,HANDLE,UPPER-F | ｶﾊﾞｰ | 1 | [EXN] |
| 19 | 52N52-62401 | | COVER,HANDLE,UPPER-R | ｶﾊﾞｰ | 1 | [EXN] |
| 20 | 239A4-12541 | | GROMMET,HANDLE-COVER | ｸﾞﾛﾒｯﾄ | 2 | [EXN] |

# FIG.163 SIDE COVER

(F70264A0) サイドカバー

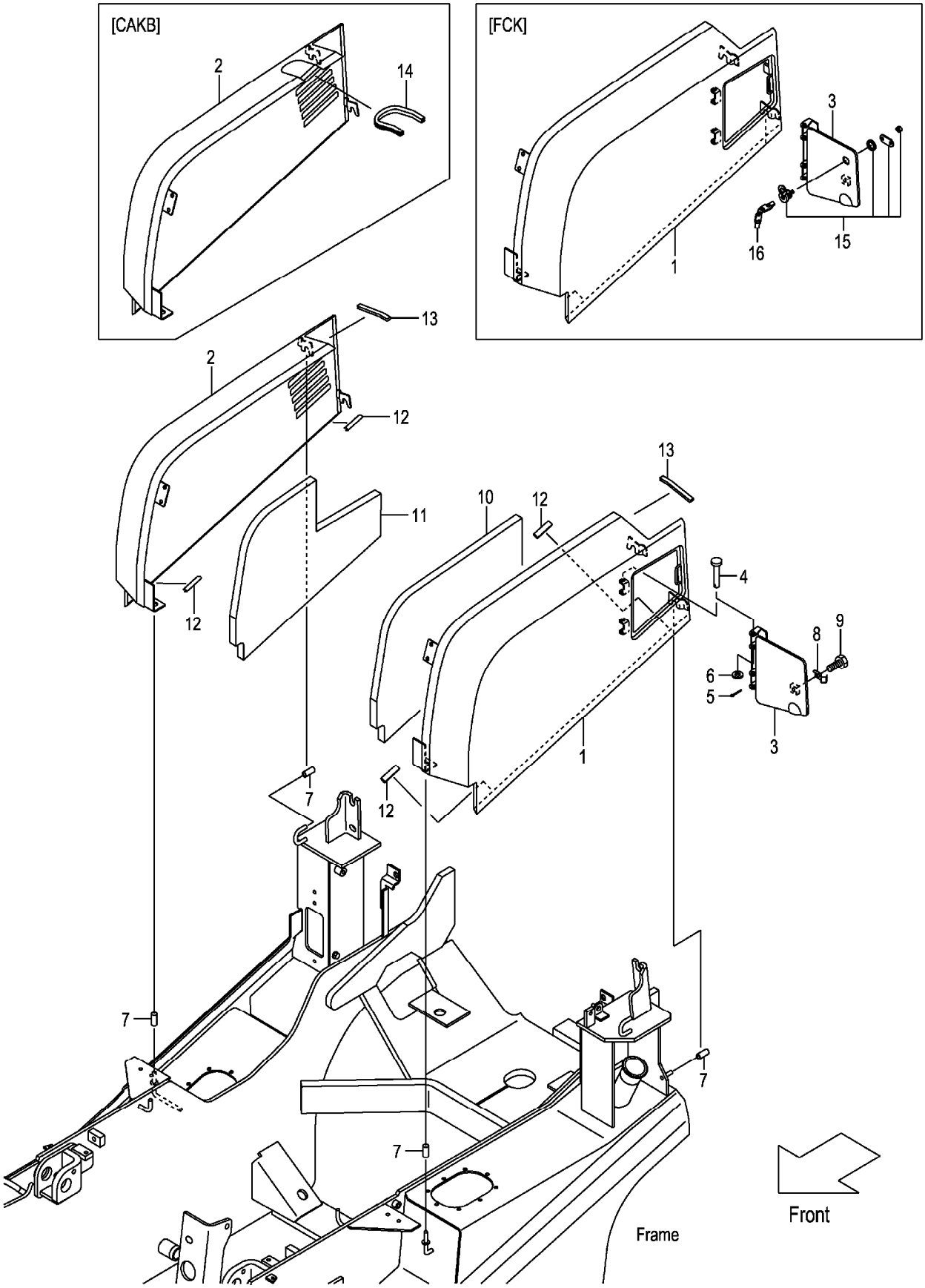

A:FG20C13 FG20T13 FG25C13 FG25T13 C:FD20C13 FD20T13 FD25C13 FD25T13 (F70264A0)
B:FG20C3 FG20T3 FG25C3 FG25T3 FG20W3 FG25W3 D:FD20C3 FD20T3 FD25C3 FD25T3 FD20W3 FD25W3

| Item No | Part No. | Mark | Description | | Req'd | Remarks : Serial No. |
|---|---|---|---|---|---|---|
| 1 | 22N56-40252 | | COVER,SIDE,LH | ｶﾊﾞｰ | 1 | |
| - | 52N58-10211 | | COVER,SIDE,LH | ｶﾊﾞｰ | 1 | [FCK] |
| 2 | 22N56-40262 | | COVER,SIDE,RH | ｶﾊﾞｰ | 1 | |
| - | 52N50-90201 | | COVER,SIDE,RH | ｶﾊﾞｰ | 1 | [CAKB] |
| 3 | 22N56-40272 | | COVER,FUEL-CAP | ｶﾊﾞｰ | 1 | |
| - | 52N58-10221 | | COVER,FUEL-CAP | ｶﾊﾞｰ | 1 | [FCK] |
| 4 | 02262-08045 | | PIN,CLEVIS | ﾋﾟﾝ | 2 | |
| 5 | 02200-02020 | | PIN,COTTER | ﾋﾟﾝ | 2 | A:1-128 |
| | | | | | | B:1-239 |
| | | | | | | C:1-125 |
| | | | | | | D:1-505 |
| - | 216H3-92171 | | PIN,SNAP | ﾋﾟﾝ | 2 | A:129- |
| | | | | | | B:240- |
| | | | | | | C:126- |
| | | | | | | D:506- |
| 6 | 02000-00008 | | WASHER | ﾜｯｼｬ | 2 | |
| 7 | 216G6-52291 | | CAP | ｷｬｯﾌﾟ | 6 | |
| 8 | 22N56-43251 | | SPRING,LEAF | ｽﾌﾟﾘﾝｸﾞ | 1 | |
| 9 | 01183-08012 | | BOLT | ﾎﾞﾙﾄ | 1 | |
| 10 | 22N56-40411 | | RUBBER,FOAM,LH | ﾗﾊﾞｰ | 1 | |
| 11 | 22N56-40421 | | RUBBER,FOAM,RH | ﾗﾊﾞｰ | 1 | |
| 12 | 209P6-42831 | | EDGING,L=50 | ｴｯｼﾞﾝｸﾞ | 4 | |
| 13 | 243C6-42821 | | EDGING,L=100 | ｴｯｼﾞﾝｸﾞ | 2 | |
| 14 | 243C6-42821 | | EDGING,L=230 | ｴｯｼﾞﾝｸﾞ | 1 | [CAKB] |
| A1 | 52N58-10301 | | LOCK-ASSY,COIN | ﾛｯｸｱｯｾﾝ | 1 | [FCK] INC.15,16 |
| 15 | 52N58-12501 | | CYL,KEY | ｼﾘﾝﾀﾞ | 1 | [FCK] |
| 16 | 52N58-12511 | | KEY | ｷｰ | 1 | [FCK](1SET=2PCS) |

# FIG.164 SIDE COVER [SCB001][SCBCR]

(F70264B0) サイドカバー

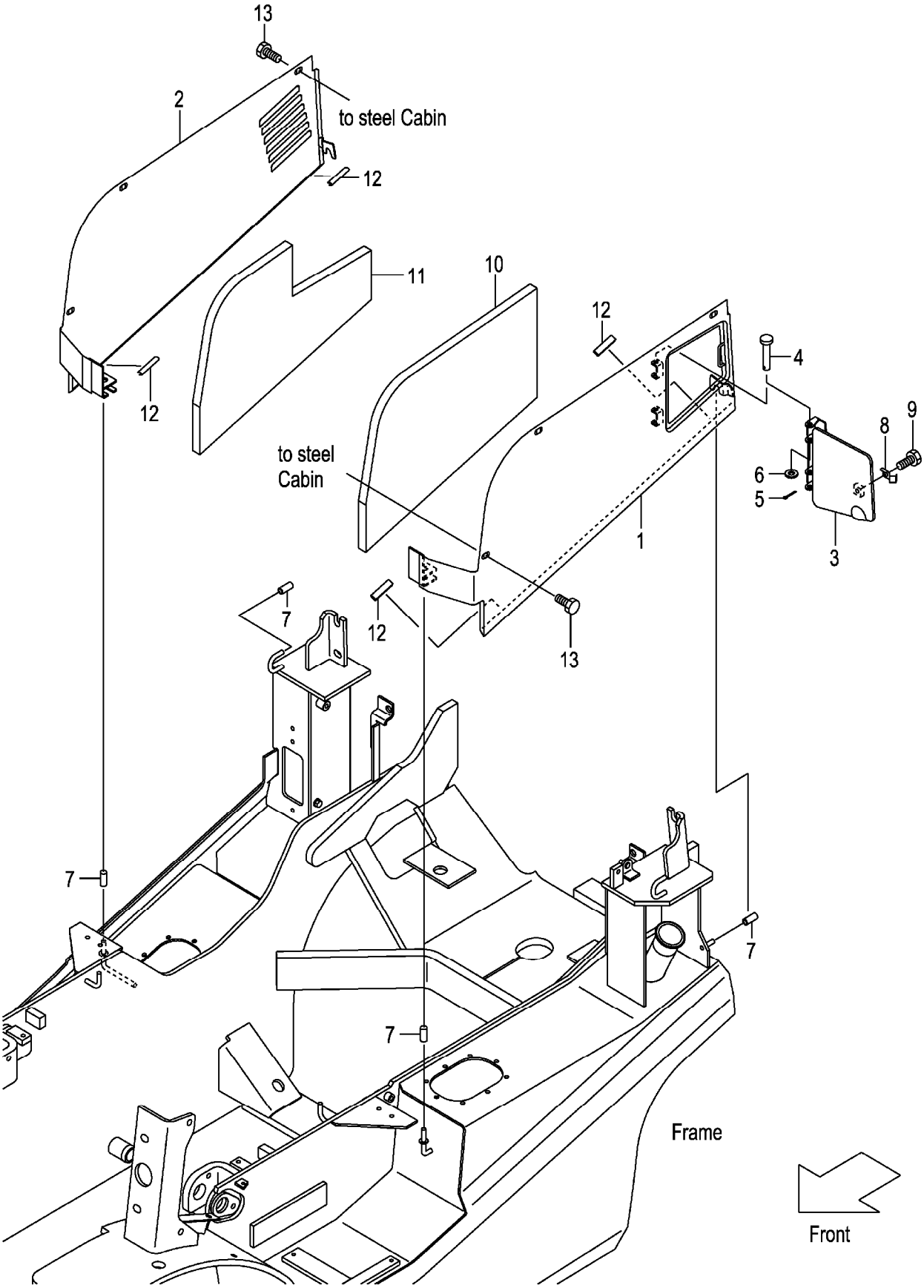

A:FG20C3 FG20T3 FG25C3 FG25T3 C:FD20C3 FD20T3 FD25C3 FD25T3
B:FG20W3 FG25W3 D:FD20W3 FD25W3

| Item No | Part No. | Mark | Description | | Req'd | Remarks : Serial No. |
|---|---|---|---|---|---|---|
| 1 | 52N55-30511 | | COVER,SIDE,LH | ｶﾊﾞｰ | 1 | [SCB001] |
| - | 52N55-30511 | | COVER,SIDE,LH | ｶﾊﾞｰ | 1 | A,B,C [SCBCR] |
| 2 | 52N55-30501 | | COVER,SIDE,RH | ｶﾊﾞｰ | 1 | [SCB001] |
| - | 52N55-30501 | | COVER,SIDE,RH | ｶﾊﾞｰ | 1 | A,B,C [SCBCR] |
| 3 | 22N56-40272 | | COVER,FUEL-CAP | ｶﾊﾞｰ | 1 | [SCB001] |
| - | 22N56-40272 | | COVER,FUEL-CAP | ｶﾊﾞｰ | 1 | A,B,C [SCBCR] |
| 4 | 02262-08045 | | PIN,CLEVIS | ﾋﾟﾝ | 2 | [SCB001] |
| - | 02262-08045 | | PIN,CLEVIS | ﾋﾟﾝ | 2 | A,B,C [SCBCR] |
| 5 | 02200-02020 | | PIN,COTTER | ﾋﾟﾝ | 2 | A,B:1-239 C,D:1-505 [SCB001] |
| - | 216H3-92171 | | PIN,SNAP | ﾋﾟﾝ | 2 | A,B:240- C,D:506- [SCB001] |
| - | 02200-02020 | | PIN,COTTER | ﾋﾟﾝ | 2 | A,B:1-239 C:1-505 [SCBCR] |
| - | 216H3-92171 | | PIN,SNAP | ﾋﾟﾝ | 2 | A,B:240- C:506- [SCBCR] |
| 6 | 02000-00008 | | WASHER | ﾜｯｼｬ | 2 | [SCB001] |
| - | 02000-00008 | | WASHER | ﾜｯｼｬ | 2 | A,B,C [SCBCR] |
| 7 | 216G6-52291 | | CAP | ｷｬｯﾌﾟ | 6 | [SCB001] |
| - | 216G6-52291 | | CAP | ｷｬｯﾌﾟ | 6 | A,B,C [SCBCR] |
| 8 | 22N56-43251 | | SPRING,LEAF | ｽﾌﾟﾘﾝｸﾞ | 1 | [SCB001] |
| - | 22N56-43251 | | SPRING,LEAF | ｽﾌﾟﾘﾝｸﾞ | 1 | A,B,C [SCBCR] |
| 9 | 01183-08012 | | BOLT | ﾎﾞﾙﾄ | 1 | [SCB001] |
| - | 01183-08012 | | BOLT | ﾎﾞﾙﾄ | 1 | A,B,C [SCBCR] |
| 10 | 52N55-32311 | | RUBBER,FOAM,LH | ﾗﾊﾞｰ | 1 | [SCB001] |
| - | 52N55-32311 | | RUBBER,FOAM,LH | ﾗﾊﾞｰ | 1 | A,B,C [SCBCR] |
| 11 | 52N55-32301 | | RUBBER,FOAM,RH | ﾗﾊﾞｰ | 1 | [SCB001] |
| - | 52N55-32301 | | RUBBER,FOAM,RH | ﾗﾊﾞｰ | 1 | A,B,C [SCBCR] |
| 12 | 209P6-42831 | | EDGING,L=50 | ｴｯｼﾞﾝｸﾞ | 4 | [SCB001] |
| - | 209P6-42831 | | EDGING,L=50 | ｴｯｼﾞﾝｸﾞ | 4 | A,B,C [SCBCR] |
| 13 | 01185-08025 | | BOLT | ﾎﾞﾙﾄ | 6 | [SCB001] |
| - | 01185-08025 | | BOLT | ﾎﾞﾙﾄ | 6 | A,B,C [SCBCR] |

# FIG.165 FRONT SIDE COVER

(F70264C0) フロントサイドカバー

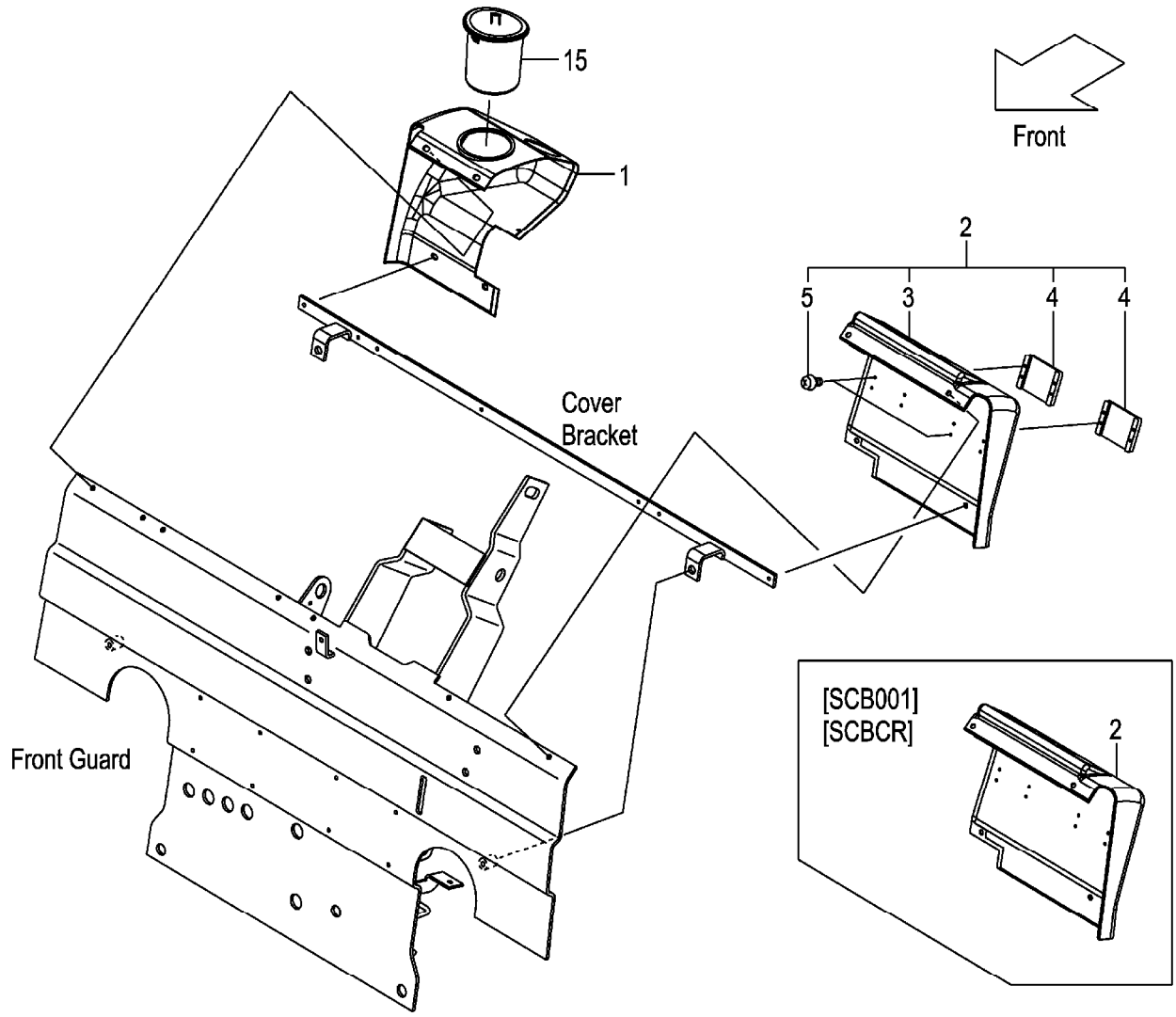


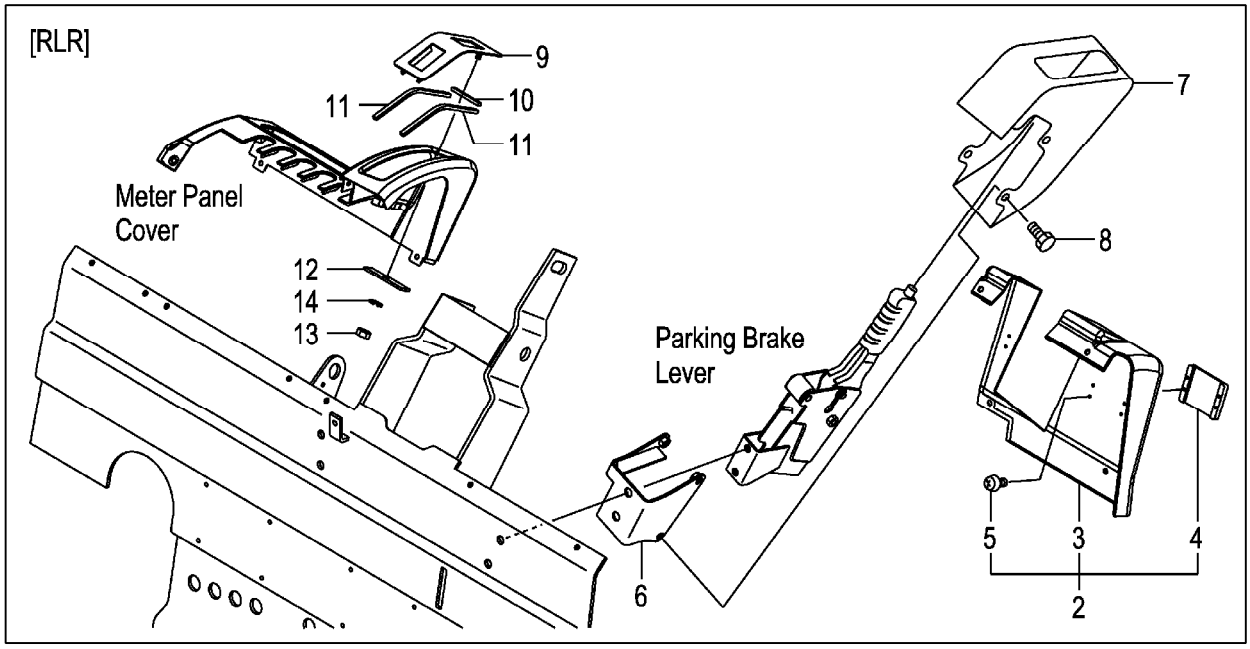

A:FG20C13 FG20T13 FG25C13 FG25T13 D:FD20C13 FD20T13 FD25C13 FD25T13
B:FG20C3 FG20T3 FG25C3 FG25T3 E:FD20C3 FD20T3 FD25C3 FD25T3
C:FG20W3 FG25W3 F:FD20W3 FD25W3

**FIG.165**
(F70264C0)

| Item No | Part No. | Mark | Description | | Req'd | Remarks : Serial No. |
|---|---|---|---|---|---|---|
| 1 | 22N56-42711 | | COVER,RH | ｶﾊﾞｰ | 1 | |
| - | 22N56-43411 | | COVER,RH | ｶﾊﾞｰ | 1 | [TTM][TPM] |
| - | 52N55-32141 | | COVER,RH | ｶﾊﾞｰ | 1 | B,C,E,F<br>[SCB001] |
| - | 52N55-32141 | | COVER,RH | ｶﾊﾞｰ | 1 | B,C,E<br>[SCBCR] |
| - | 52N55-32401 | | COVER,RH | ｶﾊﾞｰ | 1 | B,C,E,F<br>[TTM/SCB001][TPM/SCB001] |
| - | 52N55-32401 | | COVER,RH | ｶﾊﾞｰ | 1 | B,C,E<br>[TTM/SCBCR][TPM/SCBCR] |
| 2 | 22N56-42851 | | COVER-ASSY,LH | ｶﾊﾞｰｱｯｾﾝ | 1 | INC.3-5 |
| - | 22N56-43021 | | COVER-ASSY,LH | ｶﾊﾞｰｱｯｾﾝ | 1 | [RWL/BB SW/LPG]<br>[RWL/BBASW/LPG] INC.3-5 |
| - | 22N56-43021 | | COVER-ASSY,LH | ｶﾊﾞｰｱｯｾﾝ | 1 | [RWL/BB SW/AW071]<br>[RWL/BBASW/AW071] INC.3-5 |
| - | 22N56-43021 | | COVER-ASSY,LH | ｶﾊﾞｰｱｯｾﾝ | 1 | [RWL/LPG/AW071] INC.3-5 |
| - | 22N56-43021 | | COVER-ASSY,LH | ｶﾊﾞｰｱｯｾﾝ | 1 | [BB SW/LPG/AW071]<br>[BBASW/LPG/AW071] INC.3-5 |
| - | 22N56-43031 | | COVER-ASSY,LH | ｶﾊﾞｰｱｯｾﾝ | 1 | [AM][TTM/TPM] INC.3-5 |
| - | 52E00-52191 | | COVER-ASSY,LH | ｶﾊﾞｰｱｯｾﾝ | 1 | [LPG/LPGL] INC.3-5 |
| - | 52N55-40411 | | COVER-ASSY,LH | ｶﾊﾞｰｱｯｾﾝ | 1 | [AW071/WAS071] INC.3-5 |
| - | 52N55-42251 | | COVER,LH | ｶﾊﾞｰ | 1 | B,C,E,F<br>[SCB001] |
| - | 52N55-42251 | | COVER,LH | ｶﾊﾞｰ | 1 | B,C,E<br>[SCBCR] |
| - | 52N55-32411 | | COVER,LH | ｶﾊﾞｰ | 1 | B,C,E,F<br>[AM/SCB001][TTM/TPM/SCB001] |
| - | 52N55-32411 | | COVER,LH | ｶﾊﾞｰ | 1 | B,C,E<br>[AM/SCBCR][TTM/TPM/SCBCR] |
| - | 22N56-43771 | | COVER-ASSY,LH | ｶﾊﾞｰｱｯｾﾝ | 1 | [PLR] INC.3-5 |
| 3 | 22N56-42721 | | COVER,LH | ｶﾊﾞｰ | 1 | (WITHOUT SCB001,SCBCR) |
| - | 22N56-43421 | | COVER,LH | ｶﾊﾞｰ | 1 | [RWL/BB SW/LPG]<br>[RWL/BBASW/LPG] |
| - | 22N56-43421 | | COVER,LH | ｶﾊﾞｰ | 1 | [RWL/BB SW/AW071]<br>[RWL/BBASW/AW071] |
| - | 22N56-43421 | | COVER,LH | ｶﾊﾞｰ | 1 | [RWL/LPG/AW071] |
| - | 22N56-43421 | | COVER,LH | ｶﾊﾞｰ | 1 | [BB SW/LPG/AW071]<br>[BBASW/LPG/AW071] |
| - | 22N56-43431 | | COVER,LH | ｶﾊﾞｰ | 1 | [AM][TTM/TPM] |
| - | 52E00-52201 | | COVER,LH | ｶﾊﾞｰ | 1 | [LPG/LPGL] |
| - | 52N55-40081 | | COVER,LH | ｶﾊﾞｰ | 1 | [AW071/WAS071] |
| - | 22N56-43871 | | COVER,LH | ｶﾊﾞｰ | 1 | [PLR] |
| 4 | 22N56-42811 | | COVER | ｶﾊﾞｰ | 2 | (WITHOUT SCB001,SCBCR) |
| - | 22N56-42811 | | COVER | ｶﾊﾞｰ | 1 | [PLR] |
| 5 | 214A6-42781 | | SCREW | ｽｸﾘｭ | 8 | (WITHOUT SCB001,SCBCR) |
| - | 214A6-42781 | | SCREW | ｽｸﾘｭ | 4 | [PLR] |
| 6 | 22N56-43801 | | BRACKET | ﾌﾞﾗｹｯﾄ | 1 | [PLR] |
| 7 | 22N56-43831 | | COVER,PLR | ｶﾊﾞｰ | 1 | [PLR] |
| 8 | 01185-08015 | | BOLT | ﾎﾞﾙﾄ | 3 | [PLR] |
| 9 | 22N56-43881 | | COVER,PLR | ｶﾊﾞｰ | 1 | [PLR] |

# FIG.165 FRONT SIDE COVER

(F70264C0) フロントサイドカバー

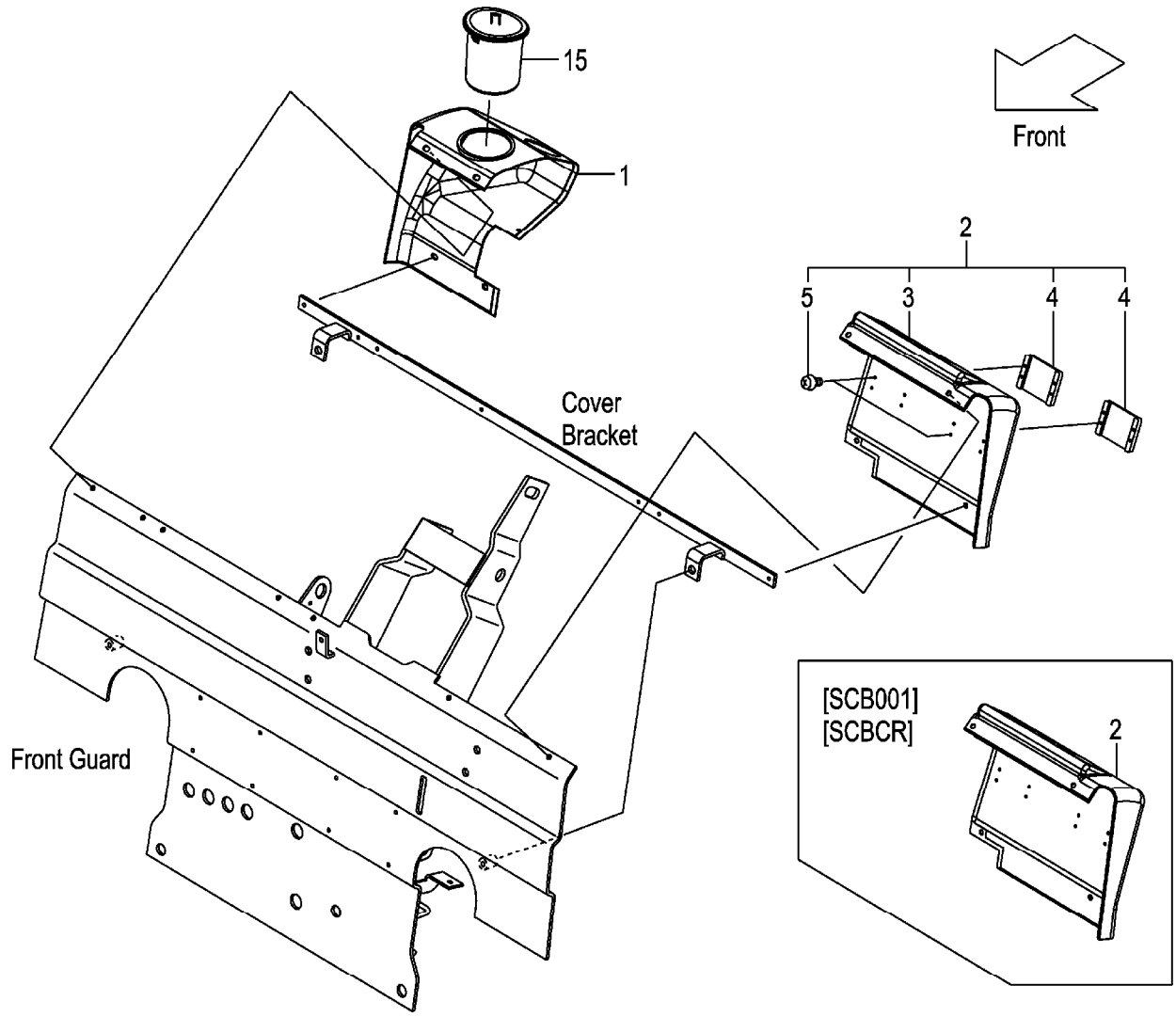


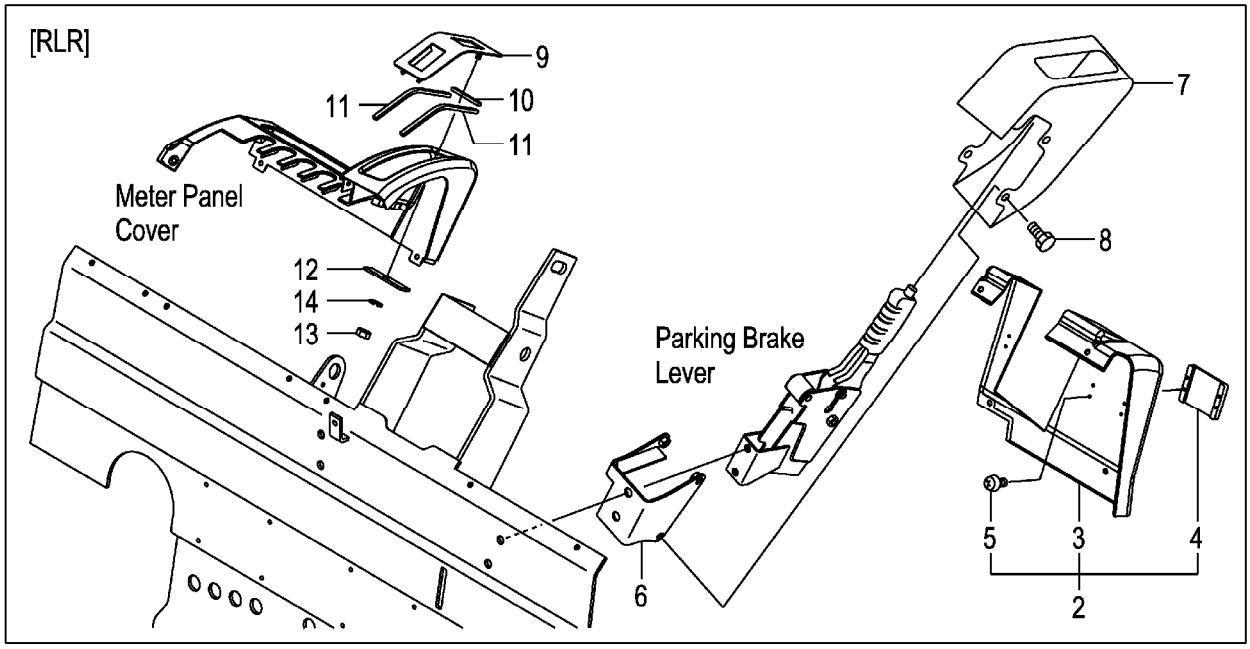

A:FG20C13 FG20T13 FG25C13 FG25T13 D:FD20C13 FD20T13 FD25C13 FD25T13
B:FG20C3 FG20T3 FG25C3 FG25T3 E:FD20C3 FD20T3 FD25C3 FD25T3
C:FG20W3 FG25W3 F:FD20W3 FD25W3

**FIG.165**
(F70264C0)

| Item No | Part No. | Mark | Description | | Req'd | Remarks : Serial No. |
|---|---|---|---|---|---|---|
| 10 | 22N56-43911 | | RUBBER | ﾗﾊﾞｰ | 1 | [PLR] |
| 11 | 22N56-43921 | | RUBBER | ﾗﾊﾞｰ | 2 | [PLR] |
| 12 | 22N56-43931 | | PLATE | ﾌﾟﾚｰﾄ | 1 | [PLR] |
| 13 | 01400-00006 | | NUT | ﾅｯﾄ | 1 | [PLR] |
| 14 | 02010-00006 | | WASHER | ﾜｯｼｬ | 1 | [PLR] |
| 15 | 22N56-42761 | | CUP,HOLDER | ｶｯﾌﾟ | 1 | (WITHOUT SM) |

# M E M O

# M E M O

# FIG.166 SEAT

(F7026810) シート

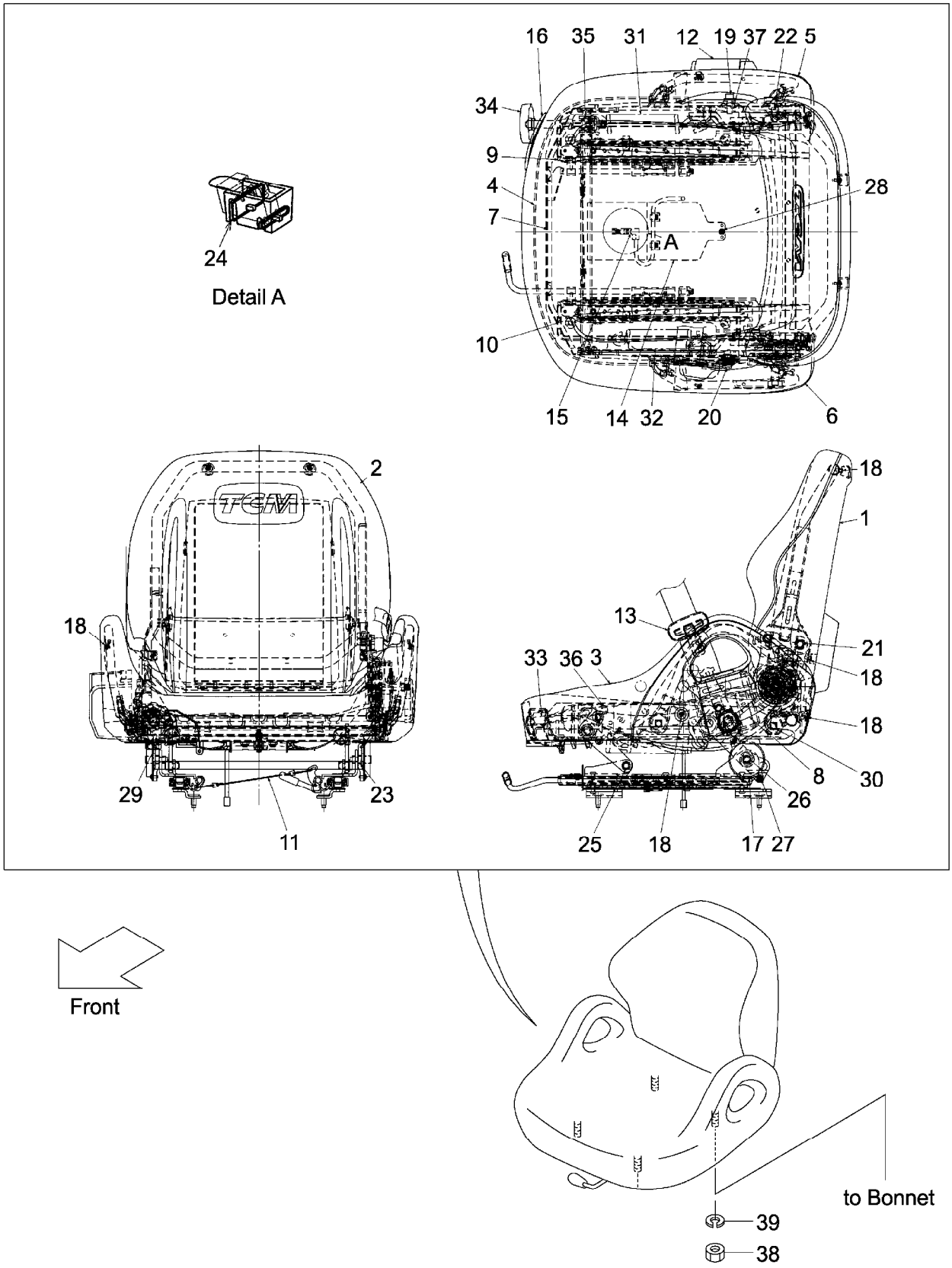

A:FG20C13 FG20T13 FG25C13 FG25T13 D:FD20C13 FD20T13 FD25C13 FD25T13
B:FG20C3 FG20T3 FG25C3 FG25T3 E:FD20C3 FD20T3 FD25C3 FD25T3
C:FG20W3 FG25W3 F:FD20W3 FD25W3

**FIG.166**
(F7026810)

| Item No | Part No. | Mark | Description | | Req'd | Remarks : Serial No. |
|---|---|---|---|---|---|---|
| A1 | 242F6-80101 | | SEAT-ASSY | ｼｰﾄｱｯｾﾝ | 1 | INC.1-13,16-23,25-37 |
| - | 542F3-80101 | | SEAT-ASSY | ｼｰﾄｱｯｾﾝ | 1 | (SEAT SW) INC.1-37 |
| - | 52N56-22201 | | SEAT-ASSY | ｼｰﾄｱｯｾﾝ | 1 | [OKM][SIL] INC.1-37 |
| - | 52N56-22201 | | SEAT-ASSY | ｼｰﾄｱｯｾﾝ | 1 | B,E |
| | | | | | | [EXE][EXN] INC.1-37 |
| 1 | 242F6-82001 | | BOARD,SEAT-BACK | ﾎﾞｰﾄﾞ | 1 | |
| 2 | 242F6-82011 | | PAD,SEAT-BACK | ﾊﾟｯﾄﾞ | 1 | |
| 3 | 242F6-82021 | | PAD,SEAT-CUSHION | ﾊﾟｯﾄﾞ | 1 | |
| 4 | 242F6-82031 | | PANEL,SEAT-CUSHION | ﾊﾟﾈﾙ | 1 | |
| 5 | 242F6-82041 | | SHIELD,RH | ｼｰﾙﾄﾞ | 1 | |
| 6 | 242F6-82051 | | SHIELD,LH | ｼｰﾙﾄﾞ | 1 | |
| 7 | 242F6-82061 | | FRAME | ﾌﾚｰﾑ | 1 | |
| 8 | 242F6-82071 | | LEVER | ﾚﾊﾞｰ | 1 | |
| 9 | 242F6-82081 | | TRACK,RH | ﾄﾗｯｸ | 1 | |
| 10 | 242F6-82091 | | TRACK,LH | ﾄﾗｯｸ | 1 | |
| 11 | 242F6-82101 | | WIRE | ﾜｲﾔ | 1 | |
| 12 | 242F6-82111 | | BELT,SEAT,OUTER | ﾍﾞﾙﾄ | 1 | |
| 13 | 242F6-82121 | | BELT,SEAT,INNER | ﾍﾞﾙﾄ | 1 | |
| 14 | 542F3-82001 | | PLATE,SEAT-CUSHION | ﾌﾟﾚｰﾄ | 1 | [OKM][SIL](SEAT SW) |
| - | 542F3-82001 | | PLATE,SEAT-CUSHION | ﾌﾟﾚｰﾄ | 1 | B,E |
| | | | | | | [EXE][EXN] |
| 15 | 542F3-82011 | | SWITCH,SEAT | ｽｲｯﾁ | 1 | [OKM][SIL](SEAT SW) |
| - | 542F3-82011 | | SWITCH,SEAT | ｽｲｯﾁ | 1 | B,E |
| | | | | | | [EXE][EXN] |
| 16 | 242F6-82131 | | CONTROL,SUSPENSION | ｺﾝﾄﾛｰﾙ | 1 | |
| 17 | 242F6-82141 | | ABSORBER,SUSPENSION | ｱﾌﾞｿｰﾊﾞ | 2 | |
| 18 | 242F6-82151 | | SCREW | ｽｸﾘｭ | 10 | |
| 19 | 242F6-82161 | | BOLT | ﾎﾞﾙﾄ | 1 | |
| 20 | 242F6-82171 | | BOLT | ﾎﾞﾙﾄ | 1 | |
| 21 | 242F6-82181 | | BOLT | ﾎﾞﾙﾄ | 2 | |
| 22 | 242F6-82191 | | BOLT | ﾎﾞﾙﾄ | 1 | |
| 23 | 242F6-82201 | | COLLAR | ｶﾗｰ | 4 | |
| 24 | 542F3-82021 | | CLAMP | ｸﾗﾝﾌﾟ | 2 | [OKM][SIL](SEAT SW) |
| - | 542F3-82021 | | CLAMP | ｸﾗﾝﾌﾟ | 2 | B,E |
| | | | | | | [EXE][EXN] |
| 25 | 242F6-82211 | | BOLT | ﾎﾞﾙﾄ | 2 | |
| 26 | 242F6-82221 | | BOLT | ﾎﾞﾙﾄ | 2 | |
| 27 | 242F6-82231 | | SCREW | ｽｸﾘｭ | 4 | |
| 28 | 242F6-82241 | | SCREW | ｽｸﾘｭ | 1 | [OKM][SIL](SEAT SW) |
| - | 242F6-82241 | | SCREW | ｽｸﾘｭ | 1 | B,E |
| | | | | | | [EXE][EXN] |
| 29 | 242F6-82251 | | SCREW | ｽｸﾘｭ | 2 | |
| 30 | 242F6-82261 | | BOLT | ﾎﾞﾙﾄ | 4 | |
| 31 | 242F6-82271 | | SPRING,TENSION | ｽﾌﾟﾘﾝｸﾞ | 1 | |
| 32 | 242F6-82281 | | SPRING,TENSION | ｽﾌﾟﾘﾝｸﾞ | 1 | |
| 33 | 242F6-82291 | | SHAFT,SUS-CONTROL | ｼｬﾌﾄ | 1 | |
| 34 | 242F6-82301 | | HANDLE,SUS-CONTROL | ﾊﾝﾄﾞﾙ | 1 | |
| 35 | 242F6-82311 | | PIN | ﾋﾟﾝ | 1 | |
| 36 | 242F6-82321 | | NUT | ﾅｯﾄ | 1 | |
| 37 | 242F6-82331 | | WASHER | ﾜｯｼｬ | 1 | |

# FIG.166 SEAT

(F7026810) シート

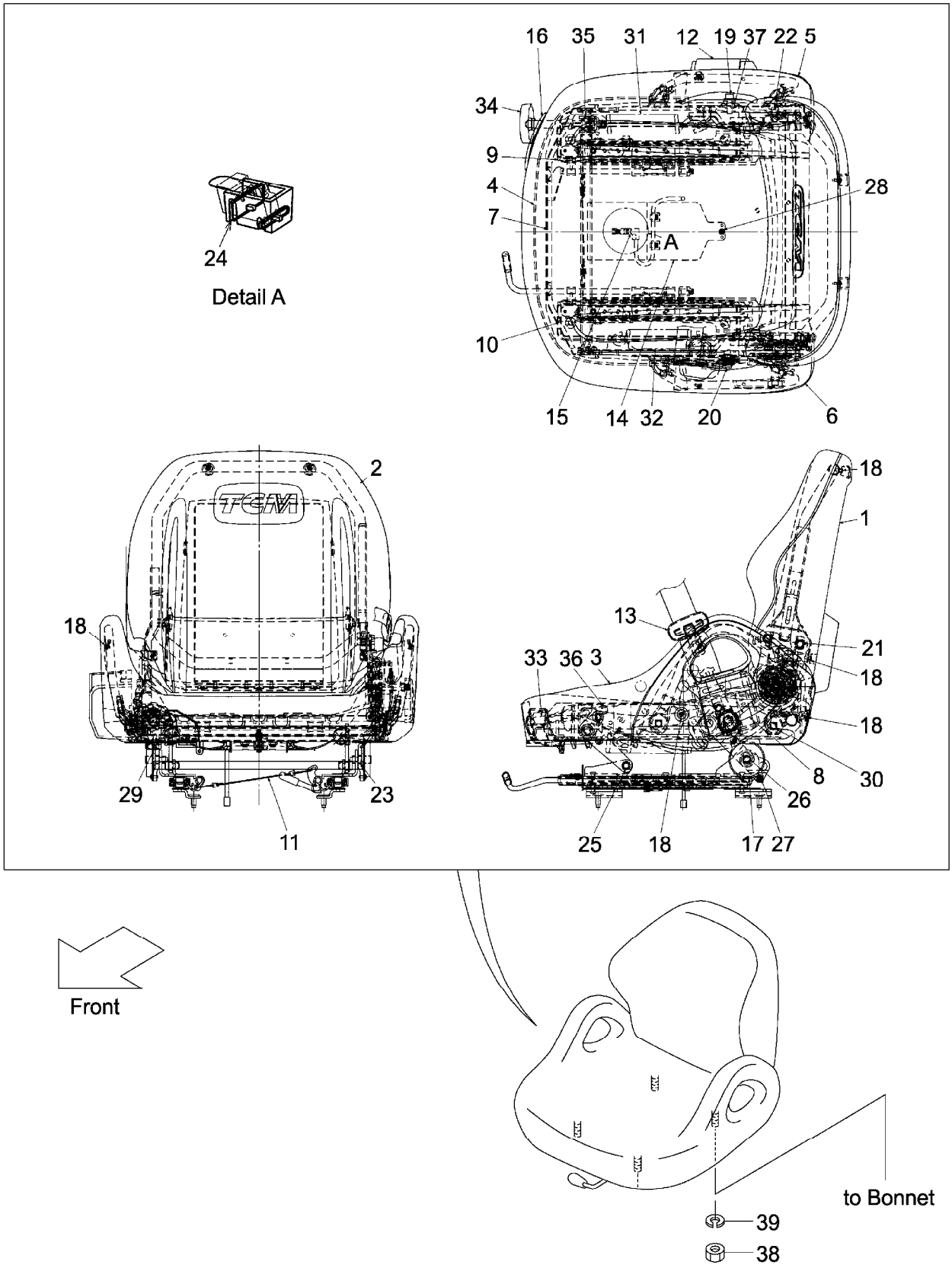

A:FG20C13 FG20T13 FG25C13 FG25T13 D:FD20C13 FD20T13 FD25C13 FD25T13
B:FG20C3 FG20T3 FG25C3 FG25T3 E:FD20C3 FD20T3 FD25C3 FD25T3
C:FG20W3 FG25W3 F:FD20W3 FD25W3

**FIG.166**
(F7026810)

| Item No | Part No. | Mark | Description | Req'd | Remarks : Serial No. |
|---|---|---|---|---|---|
| 38 | 01400-00008 | | NUT ナット | 4 | |
| 39 | 02010-00008 | | WASHER ワッシャ | 4 | |

# M E M O

# M E M O

# FIG.167 SEAT [HGL]

(F7026820) シート

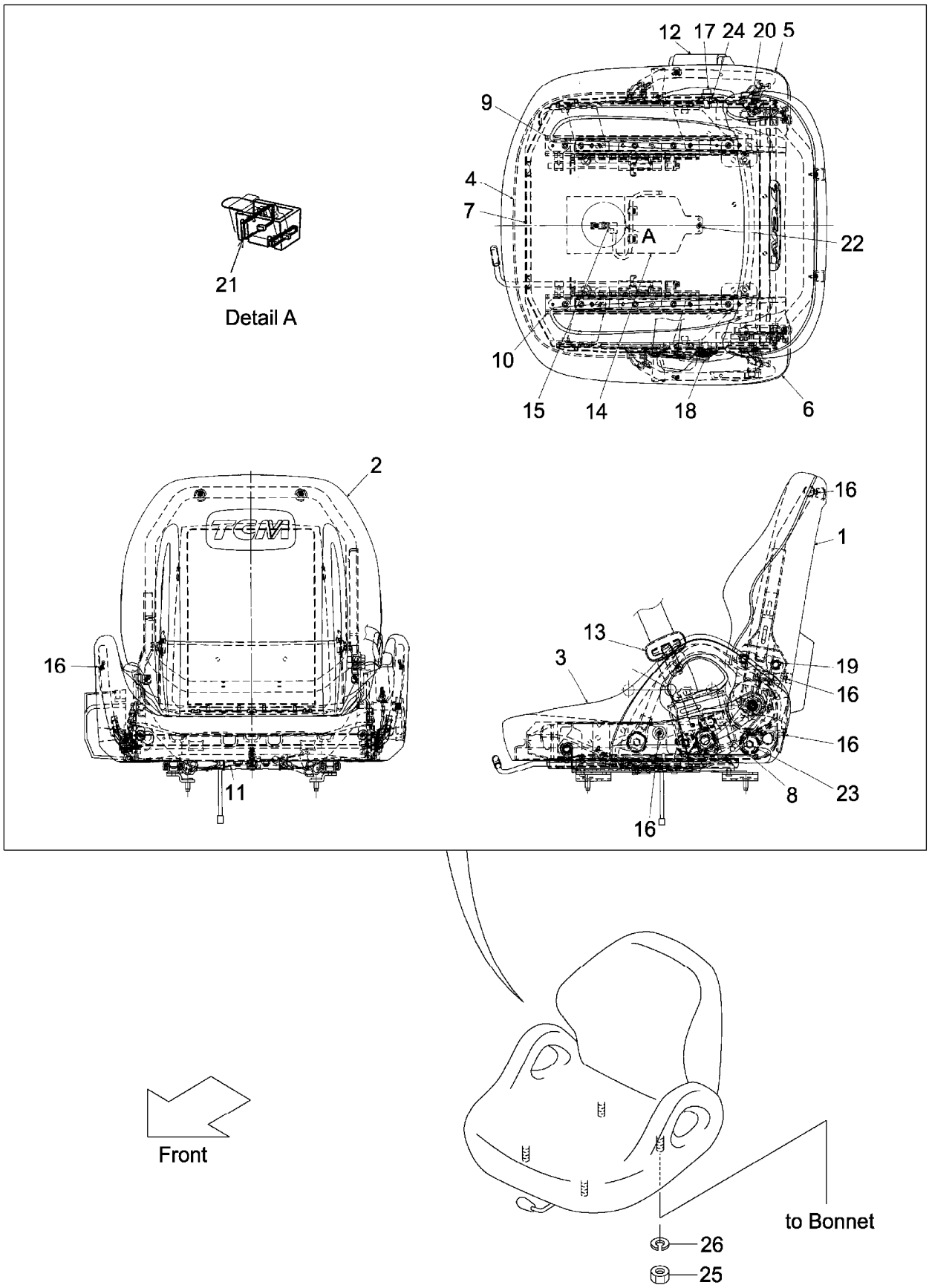

A:FG20C13 FG20T13 FG25C13 FG25T13 C:FD20C13 FD20T13 FD25C13 FD25T13 (F7026820)
B:FG20C3 FG20T3 FG25C3 FG25T3 FG20W3 FG25W3 D:FD20C3 FD20T3 FD25C3 FD25T3 FD20W3 FD25W3

| Item No | Part No. | Mark | Description | | Req'd | Remarks : Serial No. |
|---|---|---|---|---|---|---|
| A1 | 242F6-80201 | | SEAT-ASSY | ｼｰﾄｱｯｾﾝ | 1 | [HGL] INC.1-13,16-20,23,24 |
| - | 542F3-80201 | | SEAT-ASSY | ｼｰﾄｱｯｾﾝ | 1 | [HGL](SEAT SW) INC.1-24 |
| 1 | 242F6-82001 | | BOARD,SEAT-BACK | ﾎﾞｰﾄﾞ | 1 | [HGL] |
| 2 | 242F6-82011 | | PAD,SEAT-BACK | ﾊﾟｯﾄﾞ | 1 | [HGL] |
| 3 | 242F6-82341 | | PAD,SEAT-CUSHION | ﾊﾟｯﾄﾞ | 1 | [HGL] |
| 4 | 242F6-82031 | | PANEL,SEAT-CUSHION | ﾊﾟﾈﾙ | 1 | [HGL] |
| 5 | 242F6-82041 | | SHIELD,RH | ｼｰﾙﾄﾞ | 1 | [HGL] |
| 6 | 242F6-82051 | | SHIELD,LH | ｼｰﾙﾄﾞ | 1 | [HGL] |
| 7 | 242F6-82351 | | FRAME | ﾌﾚｰﾑ | 1 | [HGL] |
| 8 | 242F6-82071 | | LEVER | ﾚﾊﾞｰ | 1 | [HGL] |
| 9 | 242F6-82361 | | TRACK,RH | ﾄﾗｯｸ | 1 | [HGL] |
| 10 | 242F6-82371 | | TRACK,LH | ﾄﾗｯｸ | 1 | [HGL] |
| 11 | 242F6-82101 | | WIRE | ﾜｲﾔ | 1 | [HGL] |
| 12 | 242F6-82111 | | BELT,SEAT,OUTER | ﾍﾞﾙﾄ | 1 | [HGL] |
| 13 | 242F6-82121 | | BELT,SEAT,INNER | ﾍﾞﾙﾄ | 1 | [HGL] |
| 14 | 542F3-82001 | | PLATE,SEAT-CUSHION | ﾌﾟﾚｰﾄ | 1 | [HGL](SEAT SW) |
| 15 | 542F3-82011 | | SWITCH,SEAT | ｽｲｯﾁ | 1 | [HGL](SEAT SW) |
| 16 | 242F6-82151 | | SCREW | ｽｸﾘｭ | 10 | [HGL] |
| 17 | 242F6-82161 | | BOLT | ﾎﾞﾙﾄ | 1 | [HGL] |
| 18 | 242F6-82171 | | BOLT | ﾎﾞﾙﾄ | 1 | [HGL] |
| 19 | 242F6-82181 | | BOLT | ﾎﾞﾙﾄ | 2 | [HGL] |
| 20 | 242F6-82191 | | BOLT | ﾎﾞﾙﾄ | 1 | [HGL] |
| 21 | 542F3-82021 | | CLAMP | ｸﾗﾝﾌﾟ | 2 | [HGL](SEAT SW) |
| 22 | 242F6-82241 | | SCREW | ｽｸﾘｭ | 1 | [HGL](SEAT SW) |
| 23 | 242F6-82261 | | BOLT | ﾎﾞﾙﾄ | 4 | [HGL] |
| 24 | 242F6-82291 | | SHAFT,SUS-CONTROL | ｼｬﾌﾄ | 1 | [HGL] |
| 25 | 01400-00008 | | NUT | ﾅｯﾄ | 4 | [HGL] |
| 26 | 02010-00008 | | WASHER | ﾜｯｼｬ | 4 | [HGL] |

# FIG.168 PUMP UNIT (CLUTCH)(TOR-CON)

(F7027110) ﾎﾟﾝﾌﾟﾕﾆｯﾄ

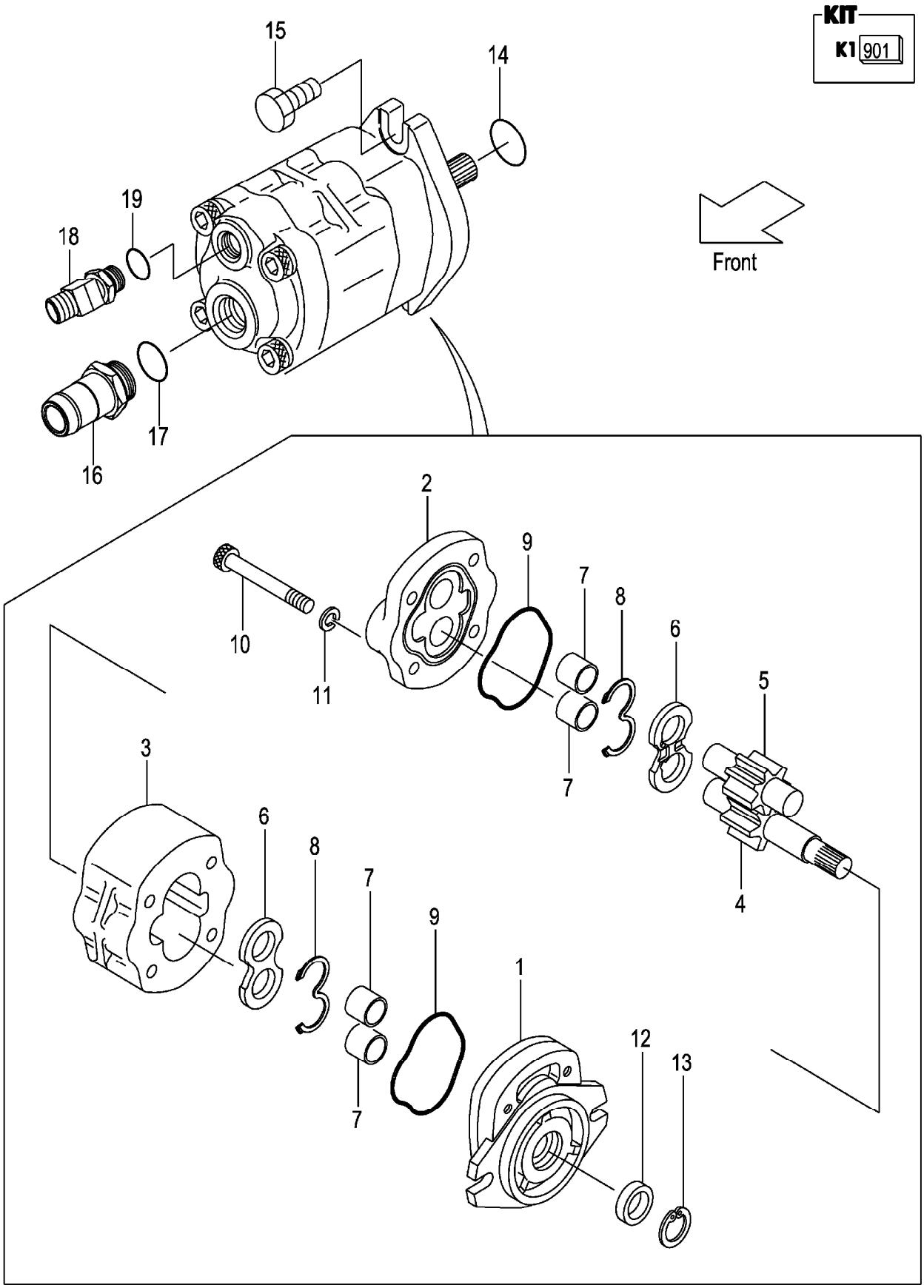

A:FG20C13 FG20T13 FG25C13 FG25T13 C:FD20C13 FD20T13 FD25C13 FD25T13
B:FG20C3 FG20T3 FG25C3 FG25T3 D:FD20C3 FD20T3 FD25C3 FD25T3

(F7027110)

| Item No | Part No. | Mark | Description | | Req'd | Remarks : Serial No. |
|---|---|---|---|---|---|---|
| A1 | 134A7-10301 | | PUMP-ASSY,GEAR | ｷﾞﾔｰﾎﾟﾝﾌﾟｱｯｾﾝ | 1 | INC.1-13 |
| 901 | 110F7-12001 | K1 | KIT,REPAIR | ﾘﾍﾟｱｷｯﾄ | 1 | INC.8,9,12,13 |
| 1 | NO PART NO. | # | COVER,FRONT | ｶﾊﾞｰ | 1 | |
| 2 | NO PART NO. | # | COVER,REAR | ｶﾊﾞｰ | 1 | |
| 3 | NO PART NO. | # | BODY | ﾎﾞﾃﾞｨ | 1 | |
| 4 | NO PART NO. | # | GEAR,DRIVE | ｷﾞﾔｰ | 1 | |
| 5 | NO PART NO. | # | GEAR,DRIVEN | ｷﾞﾔｰ | 1 | |
| 6 | NO PART NO. | # | PLATE,SIDE | ﾌﾟﾚｰﾄ | 2 | |
| 7 | NO PART NO. | # | BUSHING | ﾌﾞｯｼﾝｸﾞ | 4 | |
| 8 | NO PART NO. | #* | GASKET | ｶﾞｽｹｯﾄ | 2 | |
| 9 | NO PART NO. | #* | GASKET | ｶﾞｽｹｯﾄ | 2 | |
| 10 | R-402-65004-03 | | BOLT | ﾎﾞﾙﾄ | 4 | |
| 11 | R-402-00710-12 | | WASHER | ﾜｯｼｬ | 4 | |
| 12 | NO PART NO. | #* | SEAL,OIL | ｼｰﾙ | 1 | |
| 13 | NO PART NO. | #* | RING,SNAP | ｽﾅｯﾌﾟﾘﾝｸﾞ | 1 | |
| 14 | 03340-00140 | | O-RING | Oﾘﾝｸﾞ | 1 | |
| 15 | 01185-10055 | | BOLT | ﾎﾞﾙﾄ | 2 | |
| A2 | 225A7-62021 | | NIPPLE-ASSY | ﾆｯﾌﾟﾙｱｯｾﾝ | 1 | INC.16,17 |
| 16 | NO PART NO. | # | NIPPLE | ﾆｯﾌﾟﾙ | 1 | |
| 17 | 03320-00290 | | O-RING | Oﾘﾝｸﾞ | 1 | |
| A3 | 216M7-62101 | | ADAPTER-ASSY | ｱﾀﾞﾌﾟﾀｱｯｾﾝ | 1 | INC.18,19 |
| 18 | NO PART NO. | # | ADAPTER | ｱﾀﾞﾌﾟﾀ | 1 | |
| 19 | 03320-00180 | | O-RING | Oﾘﾝｸﾞ | 1 | |

# FIG.169 PUMP UNIT (OIL CLUTCH)

(F7027130) ﾎﾟﾝﾌﾟﾕﾆｯﾄ

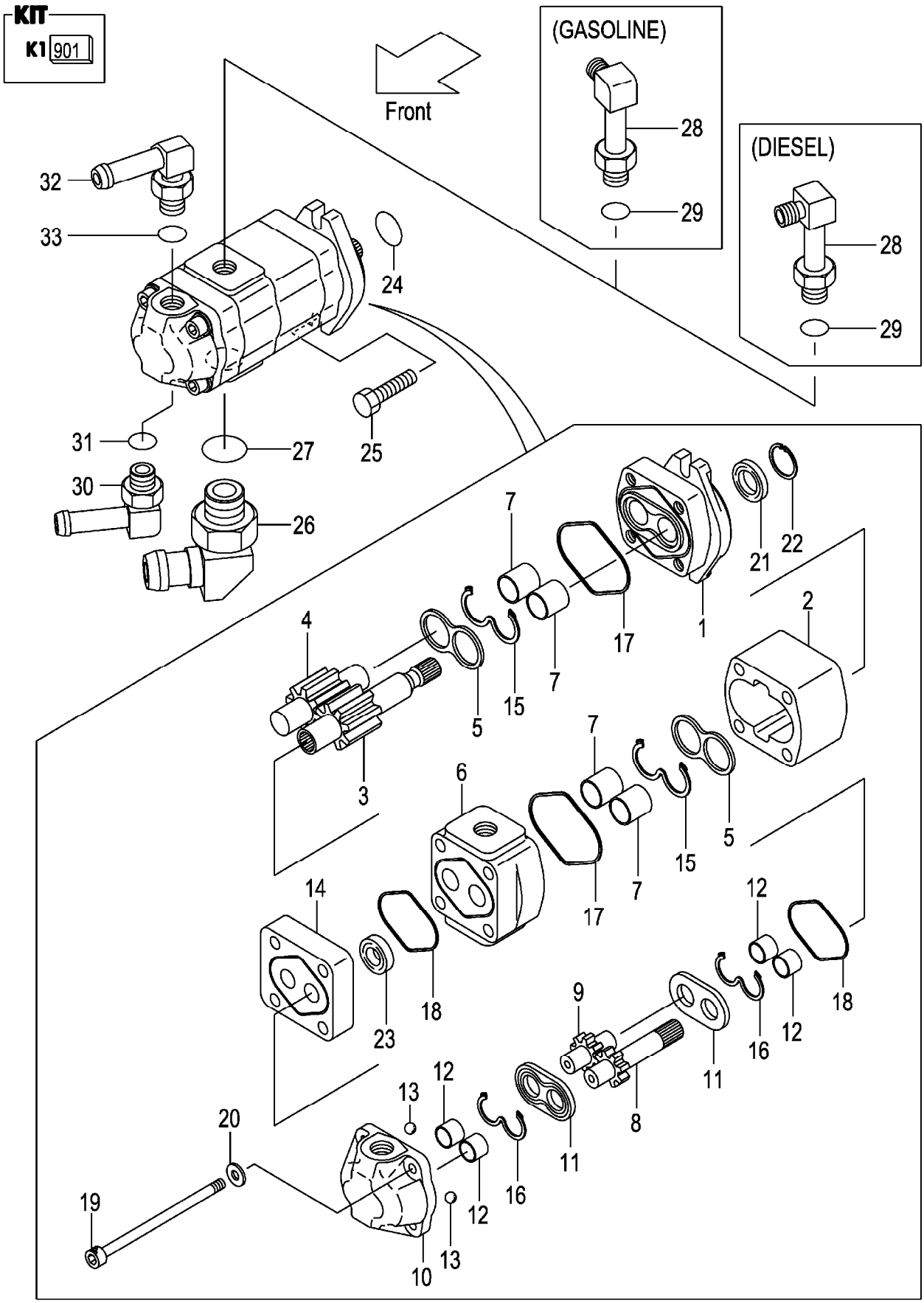

A:FG20W3 FG25W3
B:FD20W3 FD25W3

| Item No | Part No. | Mark | Description | | Req'd | Remarks : Serial No. |
|---|---|---|---|---|---|---|
| A1 | 134H7-10301 | | PUMP-ASSY,GEAR | ｷﾞﾔｰﾎﾟﾝﾌﾟｱｯｾﾝ | 1 | INC.1-23 |
| 901 | R-403-24323 | K1 | KIT,SEAL | ｼｰﾙｷｯﾄ | 1 | INC.15-18,21,23 |
| 1 | NO PART NO. | # | COVER,FRONT | ｶﾊﾞｰ | 1 | |
| 2 | NO PART NO. | # | BODY,1 | ﾎﾞﾃﾞｨ | 1 | |
| 3 | NO PART NO. | # | GEAR,DRIVE,1 | ｷﾞﾔｰ | 1 | |
| 4 | NO PART NO. | # | GEAR,DRIVEN,1 | ｷﾞﾔｰ | 1 | |
| 5 | NO PART NO. | # | PLATE,SIDE,1 | ﾌﾟﾚｰﾄ | 2 | |
| 6 | NO PART NO. | # | PLATE,ADAPTER | ﾌﾟﾚｰﾄ | 1 | |
| 7 | NO PART NO. | # | BUSHING,1 | ﾌﾞｯｼﾝｸﾞ | 4 | |
| 8 | NO PART NO. | # | GEAR,DRIVE,2 | ｷﾞﾔｰ | 1 | |
| 9 | NO PART NO. | # | GEAR,DRIVEN,2 | ｷﾞﾔｰ | 1 | |
| 10 | NO PART NO. | # | BODY,2 | ﾎﾞﾃﾞｨ | 1 | |
| 11 | NO PART NO. | # | PLATE,SIDE,2 | ﾌﾟﾚｰﾄ | 2 | |
| 12 | NO PART NO. | # | BUSHING,2 | ﾌﾞｯｼﾝｸﾞ | 4 | |
| 13 | NO PART NO. | # | BALL,STEEL | ﾎﾞｰﾙ | 2 | |
| 14 | NO PART NO. | # | SUB-PLATE,ADAPTER | ｻﾌﾞﾌﾟﾚｰﾄ | 1 | |
| 15 | NO PART NO. | #* | GASKET,1 | ｶﾞｽｹｯﾄ | 2 | |
| 16 | NO PART NO. | #* | GASKET,2 | ｶﾞｽｹｯﾄ | 2 | |
| 17 | NO PART NO. | #* | GASKET,1 | ｶﾞｽｹｯﾄ | 2 | |
| 18 | NO PART NO. | #* | GASKET,2 | ｶﾞｽｹｯﾄ | 2 | |
| 19 | R-402-65004-28 | | BOLT | ﾎﾞﾙﾄ | 4 | |
| 20 | R-402-00710-12 | | WASHER | ﾜｯｼｬ | 4 | |
| 21 | NO PART NO. | #* | SEAL,OIL | ｼｰﾙ | 1 | |
| 22 | NO PART NO. | # | RING,SNAP | ｽﾅｯﾌﾟﾘﾝｸﾞ | 1 | |
| 23 | NO PART NO. | #* | SEAL,OIL | ｼｰﾙ | 1 | |
| 24 | 03340-00140 | | O-RING | Oﾘﾝｸﾞ | 1 | |
| 25 | 01185-10055 | | BOLT | ﾎﾞﾙﾄ | 2 | |
| A2 | 239H7-60201 | | ELBOW-ASSY | ｴﾙﾎﾞｱｯｾﾝ | 1 | INC.26,27 |
| 26 | NO PART NO. | # | ELBOW | ｴﾙﾎﾞ | 1 | |
| 27 | 03320-00290 | | O-RING | Oﾘﾝｸﾞ | 1 | |
| A3 | 04150-20404 | | ELBOW-ASSY | ｴﾙﾎﾞｱｯｾﾝ | 1 | INC.28,29 |
| 28 | NO PART NO. | # | ELBOW | ｴﾙﾎﾞ | 1 | |
| 29 | 03320-00180 | | O-RING | Oﾘﾝｸﾞ | 1 | |
| A4 | 234H7-62351 | | FITTING-ASSY,HOSE | ﾎｰｽﾌｨｯﾃｨﾝｸﾞｱｯｾﾝ | 1 | INC.30,31 |
| 30 | NO PART NO. | # | FITTING,HOSE | ﾌｨｯﾃｨﾝｸﾞ | 1 | |
| 31 | 03320-00180 | | O-RING | Oﾘﾝｸﾞ | 1 | |
| A5 | 234H7-62301 | | FITTING-ASSY,HOSE | ﾎｰｽﾌｨｯﾃｨﾝｸﾞｱｯｾﾝ | 1 | INC.32,33 |
| 32 | NO PART NO. | # | FITTING,HOSE | ﾌｨｯﾃｨﾝｸﾞ | 1 | |
| 33 | 03320-00180 | | O-RING | Oﾘﾝｸﾞ | 1 | |

# FIG.170 CONTROL VALVE [2SV]

(F7027310) ｺﾝﾄﾛｰﾙﾊﾞﾙﾌﾞ

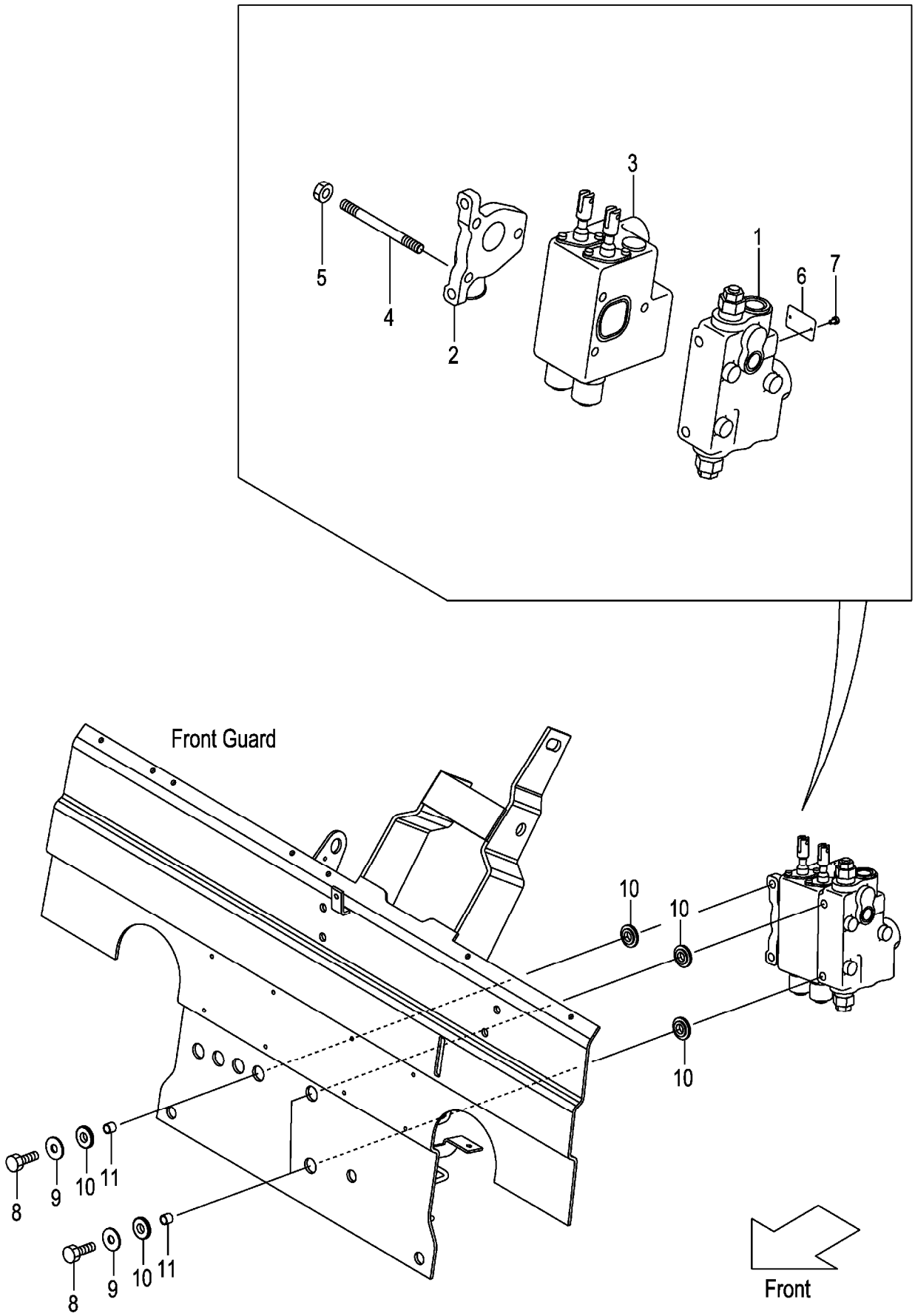

A:FG20C13 FG25C13 D:FG20T3 FG25T3 G:FD20T13 FD25T13 K:FD20W3 FD25W3
B:FG20T13 FG25T13 E:FG20W3 FG25W3 H:FD20C3 FD25C3
C:FG20C3 FG25C3 F:FD20C13 FD25C13 J:FD20T3 FD25T3

**FIG.170**
(F7027310)

| Item No | Part No. | Mark | Description | | Req'd | Remarks : Serial No. |
|---|---|---|---|---|---|---|
| A1 | 22N57-30221 | | VALVE-ASSY,CONTROL | ｺﾝﾄﾛｰﾙﾊﾞﾙﾌﾞｱｯｾﾝ | 1 | INC.1-7 |
| - | 52N54-60221 | | VALVE-ASSY,CONTROL | ｺﾝﾄﾛｰﾙﾊﾞﾙﾌﾞｱｯｾﾝ | 1 | [VLS] INC.1-7 |
| - | 22N57-30321 | | VALVE-ASSY,CONTROL | ｺﾝﾄﾛｰﾙﾊﾞﾙﾌﾞｱｯｾﾝ | 1 | [VLL][SIL] INC.1-7 |
| - | 22N57-30321 | | VALVE-ASSY,CONTROL | ｺﾝﾄﾛｰﾙﾊﾞﾙﾌﾞｱｯｾﾝ | 1 | C,D,H,J |
| | | | | | | [EXE][EXN] INC.1-7 |
| 1 | B-402-36066 | | COVER,FRONT | ｶﾊﾞｰ | 1 | |
| - | B-402-36067 | | COVER,FRONT | ｶﾊﾞｰ | 1 | [VLS][VLL][SIL] |
| - | B-402-36067 | | COVER,FRONT | ｶﾊﾞｰ | 1 | C,D,H,J |
| | | | | | | [EXE][EXN] |
| 2 | B-402-36603 | | COVER,REAR | ｶﾊﾞｰ | 1 | |
| - | B-402-36151 | | COVER,REAR | ｶﾊﾞｰ | 1 | [VLL][SIL] |
| - | B-402-36151 | | COVER,REAR | ｶﾊﾞｰ | 1 | C,D,H,J |
| | | | | | | [EXE][EXN] |
| 3 | B-402-37129 | | VALVE,COMBINATION | ﾊﾞﾙﾌﾞ | 1 | |
| - | B-402-37128 | | VALVE,COMBINATION | ﾊﾞﾙﾌﾞ | 1 | [VLL][SIL] |
| - | B-402-37128 | | VALVE,COMBINATION | ﾊﾞﾙﾌﾞ | 1 | C,D,H,J |
| | | | | | | [EXE][EXN] |
| 4 | B-402-30905-02 | | BOLT,STUD | ﾎﾞﾙﾄ | 3 | |
| 5 | B-023-06632-41 | | NUT | ﾅｯﾄ | 3 | |
| 6 | B-402-00704-13 | | PLATE,NAME | ﾌﾟﾚｰﾄ | 1 | |
| 7 | B-026-50103 | | RIVET | ﾘﾍﾞｯﾄ | 2 | |
| 8 | 22N57-32041 | | BOLT | ﾎﾞﾙﾄ | 3 | |
| 9 | 216G7-32021 | | WASHER,PLANE | ﾜｯｼｬ | 3 | |
| 10 | 22N57-42201 | | RUBBER,VALVE | ﾗﾊﾞｰ | 6 | |
| 11 | 22N57-42211 | | COLLAR | ｶﾗｰ | 3 | |

# FIG.171 CONTROL VALVE [3SV]

(F7027320) ｺﾝﾄﾛｰﾙﾊﾞﾙﾌﾞ

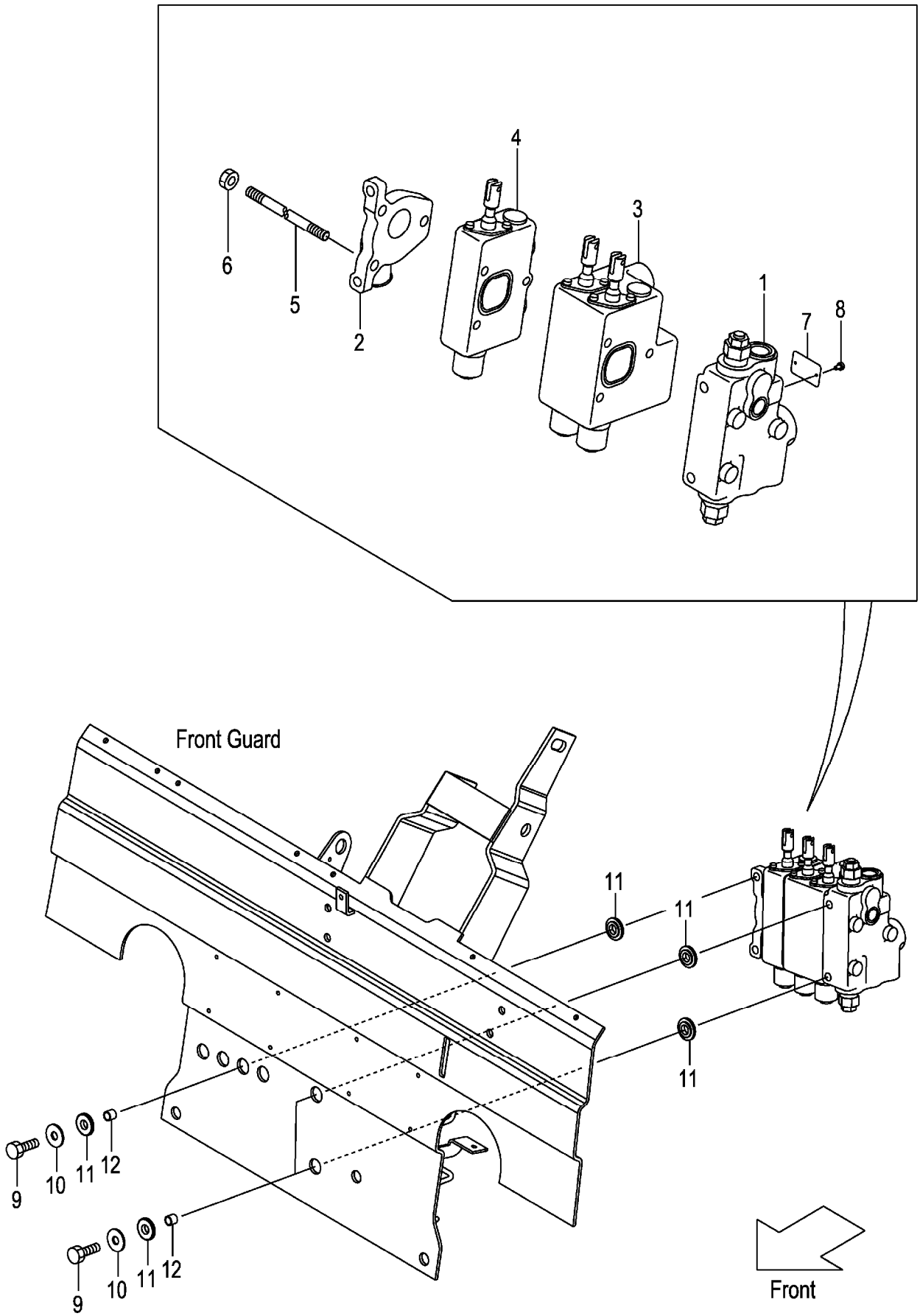

A:FG20C13 FG25C13 D:FG20T3 FG25T3 G:FD20T13 FD25T13 K:FD20W3 FD25W3
B:FG20T13 FG25T13 E:FG20W3 FG25W3 H:FD20C3 FD25C3
C:FG20C3 FG25C3 F:FD20C13 FD25C13 J:FD20T3 FD25T3

**FIG.171**
(F7027320)

| Item No | Part No. | Mark | Description | | Req'd | Remarks : Serial No. |
|---|---|---|---|---|---|---|
| A1 | 22N57-30231 | | VALVE-ASSY,CONTROL | ｺﾝﾄﾛｰﾙﾊﾞﾙﾌﾞｱｯｾﾝ | 1 | [3SV] INC.1-8 |
| - | 52N54-60231 | | VALVE-ASSY,CONTROL | ｺﾝﾄﾛｰﾙﾊﾞﾙﾌﾞｱｯｾﾝ | 1 | [3SV/VLS] INC.1-8 |
| - | 22N57-30331 | | VALVE-ASSY,CONTROL | ｺﾝﾄﾛｰﾙﾊﾞﾙﾌﾞｱｯｾﾝ | 1 | [3SV/VLL][3SV/SIL] INC.1-8 |
| - | 22N57-30331 | | VALVE-ASSY,CONTROL | ｺﾝﾄﾛｰﾙﾊﾞﾙﾌﾞｱｯｾﾝ | 1 | C,D,H,J |
| | | | | | | [3SV/EXE][3SV/EXN] INC.1-8 |
| 1 | B-402-36066 | | COVER,FRONT | ｶﾊﾞｰ | 1 | [3SV] |
| - | B-402-36067 | | COVER,FRONT | ｶﾊﾞｰ | 1 | [3SV/VLS][3SV/VLL][3SV/SIL] |
| - | B-402-36067 | | COVER,FRONT | ｶﾊﾞｰ | 1 | C,D,H,J |
| | | | | | | [3SV/EXE][3SV/EXN] |
| 2 | B-402-36603 | | COVER,REAR | ｶﾊﾞｰ | 1 | [3SV] |
| - | B-402-36151 | | COVER,REAR | ｶﾊﾞｰ | 1 | [3SV/VLL][3SV/SIL] |
| - | B-402-36151 | | COVER,REAR | ｶﾊﾞｰ | 1 | C,D,H,J |
| | | | | | | [3SV/EXE][3SV/EXN] |
| 3 | B-402-37129 | | VALVE,COMBINATION | ﾊﾞﾙﾌﾞ | 1 | [3SV] |
| - | B-402-37128 | | VALVE,COMBINATION | ﾊﾞﾙﾌﾞ | 1 | [3SV/VLL][3SV/SIL] |
| - | B-402-37128 | | VALVE,COMBINATION | ﾊﾞﾙﾌﾞ | 1 | C,D,H,J |
| | | | | | | [3SV/EXE][3SV/EXN] |
| 4 | B-402-36924 | | VALVE,SECTION | ﾊﾞﾙﾌﾞ | 1 | [3SV] |
| 5 | B-402-30905-03 | | BOLT,STUD | ﾎﾞﾙﾄ | 3 | [3SV] |
| 6 | B-023-06632-41 | | NUT | ﾅｯﾄ | 3 | [3SV] |
| 7 | B-402-00704-13 | | PLATE,NAME | ﾌﾟﾚｰﾄ | 1 | [3SV] |
| 8 | B-026-50103 | | RIVET | ﾘﾍﾞｯﾄ | 2 | [3SV] |
| 9 | 22N57-32041 | | BOLT | ﾎﾞﾙﾄ | 3 | [3SV] |
| 10 | 216G7-32021 | | WASHER,PLANE | ﾜｯｼｬ | 3 | [3SV] |
| 11 | 22N57-42201 | | RUBBER,VALVE | ﾗﾊﾞｰ | 6 | [3SV] |
| 12 | 22N57-42211 | | COLLAR | ｶﾗｰ | 3 | [3SV] |

# FIG.172 CONTROL VALVE [4SV]

(F7027330) ｺﾝﾄﾛｰﾙﾊﾞﾙﾌﾞ

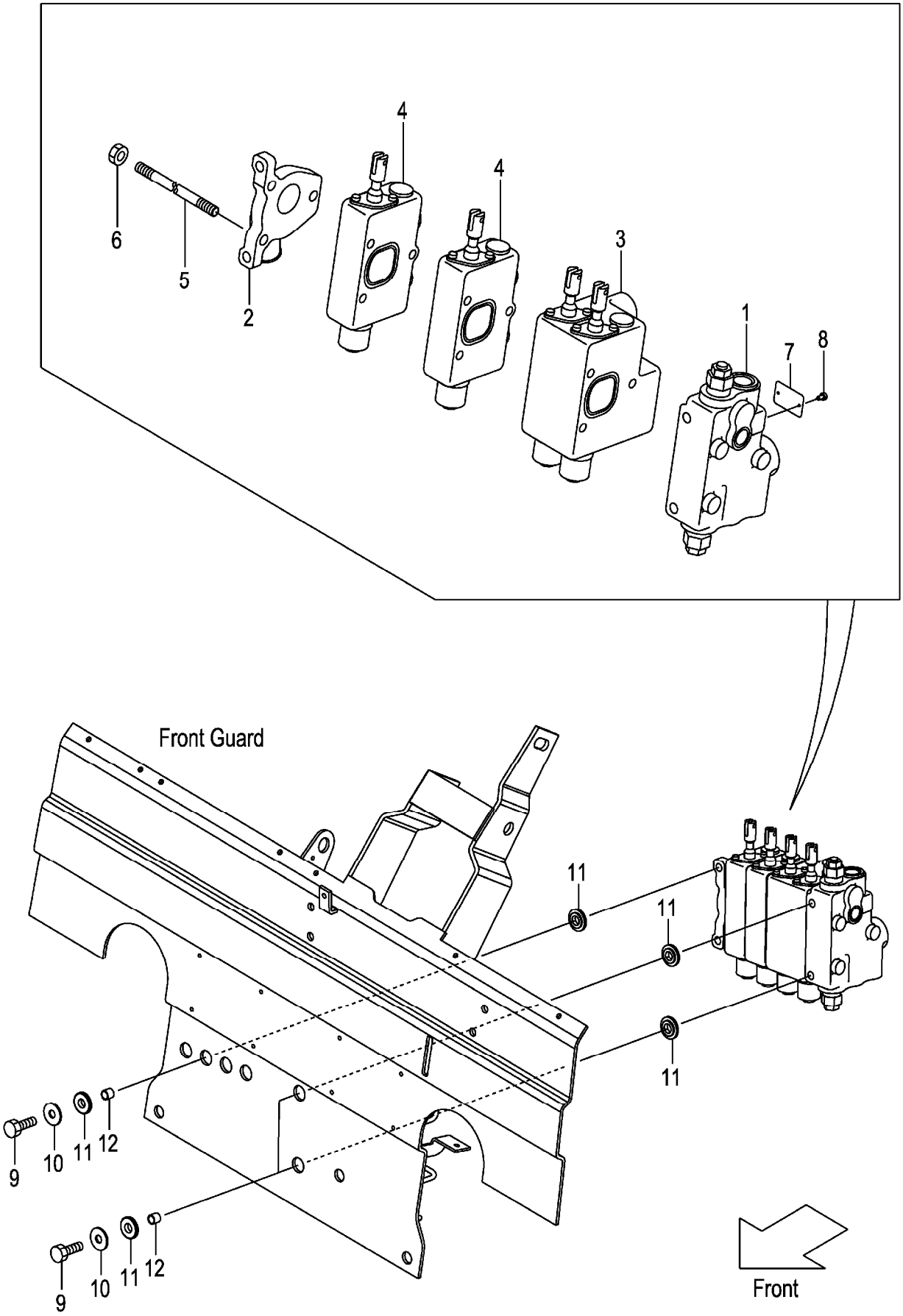

A:FG20C13 FG25C13 D:FG20T3 FG25T3 G:FD20T13 FD25T13 K:FD20W3 FD25W3
B:FG20T13 FG25T13 E:FG20W3 FG25W3 H:FD20C3 FD25C3
C:FG20C3 FG25C3 F:FD20C13 FD25C13 J:FD20T3 FD25T3

**FIG.172**
(F7027330)

| Item No | Part No. | Mark | Description | | Req'd | Remarks : Serial No. |
|---|---|---|---|---|---|---|
| A1 | 22N57-30241 | | VALVE-ASSY,CONTROL | ｺﾝﾄﾛｰﾙﾊﾞﾙﾌﾞｱｯｾﾝ | 1 | [4SV] INC.1-8 |
| - | 52N54-60241 | | VALVE-ASSY,CONTROL | ｺﾝﾄﾛｰﾙﾊﾞﾙﾌﾞｱｯｾﾝ | 1 | [4SV/VLS] INC.1-8 |
| - | 22N57-30341 | | VALVE-ASSY,CONTROL | ｺﾝﾄﾛｰﾙﾊﾞﾙﾌﾞｱｯｾﾝ | 1 | [4SV/VLL][4SV/SIL] INC.1-8 |
| - | 22N57-30341 | | VALVE-ASSY,CONTROL | ｺﾝﾄﾛｰﾙﾊﾞﾙﾌﾞｱｯｾﾝ | 1 | C,D,H,J |
| | | | | | | [4SV/EXE][4SV/EXN] INC.1-8 |
| 1 | B-402-36066 | | COVER,FRONT | ｶﾊﾞｰ | 1 | [4SV] |
| - | B-402-36067 | | COVER,FRONT | ｶﾊﾞｰ | 1 | [4SV/VLS][4SV/VLL][4SV/SIL] |
| - | B-402-36067 | | COVER,FRONT | ｶﾊﾞｰ | 1 | C,D,H,J |
| | | | | | | [4SV/EXE][4SV/EXN] |
| 2 | B-402-36603 | | COVER,REAR | ｶﾊﾞｰ | 1 | [4SV] |
| - | B-402-36151 | | COVER,REAR | ｶﾊﾞｰ | 1 | [4SV/VLL][4SV/SIL] |
| - | B-402-36151 | | COVER,REAR | ｶﾊﾞｰ | 1 | C,D,H,J |
| | | | | | | [4SV/EXE][4SV/EXN] |
| 3 | B-402-37129 | | VALVE,COMBINATION | ﾊﾞﾙﾌﾞ | 1 | [4SV] |
| - | B-402-37128 | | VALVE,COMBINATION | ﾊﾞﾙﾌﾞ | 1 | [4SV/VLL][4SV/SIL] |
| - | B-402-37128 | | VALVE,COMBINATION | ﾊﾞﾙﾌﾞ | 1 | C,D,H,J |
| | | | | | | [4SV/EXE][4SV/EXN] |
| 4 | B-402-36924 | | VALVE,SECTION | ﾊﾞﾙﾌﾞ | 2 | [4SV] |
| 5 | B-402-30905-04 | | BOLT,STUD | ﾎﾞﾙﾄ | 3 | [4SV] |
| 6 | B-023-06632-41 | | NUT | ﾅｯﾄ | 3 | [4SV] |
| 7 | B-402-00704-13 | | PLATE,NAME | ﾌﾟﾚｰﾄ | 1 | [4SV] |
| 8 | B-026-50103 | | RIVET | ﾘﾍﾞｯﾄ | 2 | [4SV] |
| 9 | 22N57-32041 | | BOLT | ﾎﾞﾙﾄ | 3 | [4SV] |
| 10 | 216G7-32021 | | WASHER,PLANE | ﾜｯｼｬ | 3 | [4SV] |
| 11 | 22N57-42201 | | RUBBER,VALVE | ﾗﾊﾞｰ | 6 | [4SV] |
| 12 | 22N57-42211 | | COLLAR | ｶﾗｰ | 3 | [4SV] |

# FIG.173 CONTROL VALVE [5SV]

(F7027340) ｺﾝﾄﾛｰﾙﾊﾞﾙﾌﾞ

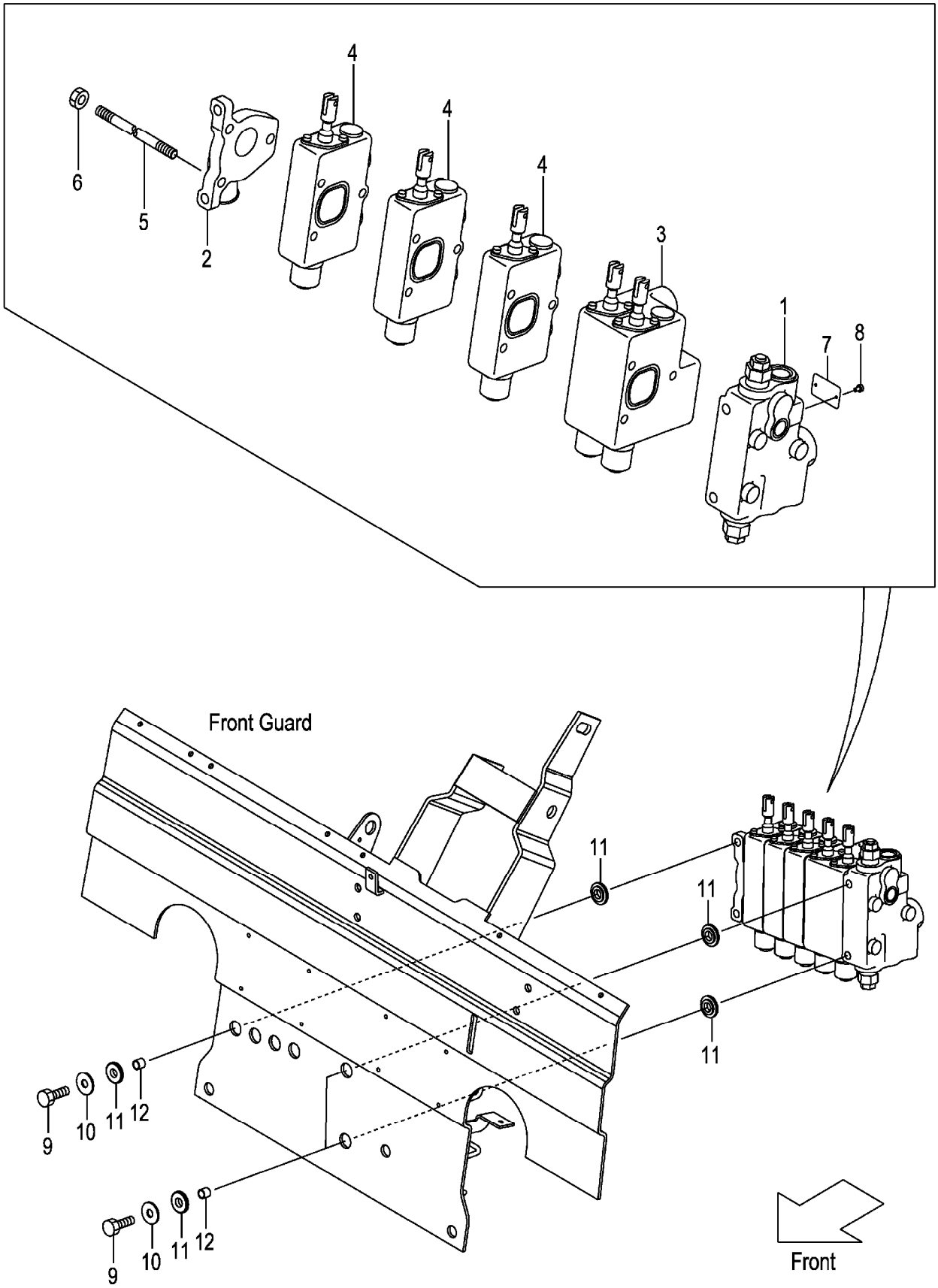

A:FG20C13 FG25C13 D:FG20T3 FG25T3 G:FD20T13 FD25T13 K:FD20W3 FD25W3
B:FG20T13 FG25T13 E:FG20W3 FG25W3 H:FD20C3 FD25C3
C:FG20C3 FG25C3 F:FD20C13 FD25C13 J:FD20T3 FD25T3

**FIG.173**
(F7027340)

| Item No | Part No. | Mark | Description | | Req'd | Remarks : Serial No. |
|---|---|---|---|---|---|---|
| A1 | 22N57-30251 | | VALVE-ASSY,CONTROL | ｺﾝﾄﾛｰﾙﾊﾞﾙﾌﾞｱｯｾﾝ | 1 | [5SV] INC.1-8 |
| - | 52N54-60251 | | VALVE-ASSY,CONTROL | ｺﾝﾄﾛｰﾙﾊﾞﾙﾌﾞｱｯｾﾝ | 1 | [5SV/VLS] INC.1-8 |
| - | 22N57-30351 | | VALVE-ASSY,CONTROL | ｺﾝﾄﾛｰﾙﾊﾞﾙﾌﾞｱｯｾﾝ | 1 | [5SV/VLL][5SV/SIL] INC.1-8 |
| - | 22N57-30351 | | VALVE-ASSY,CONTROL | ｺﾝﾄﾛｰﾙﾊﾞﾙﾌﾞｱｯｾﾝ | 1 | C,D,H,J |
| | | | | | | [5SV/EXE][5SV/EXN] INC.1-8 |
| 1 | B-402-36066 | | COVER,FRONT | ｶﾊﾞｰ | 1 | [5SV] |
| - | B-402-36067 | | COVER,FRONT | ｶﾊﾞｰ | 1 | [5SV/VLS][5SV/VLL][5SV/SIL] |
| - | B-402-36067 | | COVER,FRONT | ｶﾊﾞｰ | 1 | C,D,H,J |
| | | | | | | [5SV/EXE][5SV/EXN] |
| 2 | B-402-36603 | | COVER,REAR | ｶﾊﾞｰ | 1 | [5SV] |
| - | B-402-36151 | | COVER,REAR | ｶﾊﾞｰ | 1 | [5SV/VLL][5SV/SIL] |
| - | B-402-36151 | | COVER,REAR | ｶﾊﾞｰ | 1 | C,D,H,J |
| | | | | | | [5SV/EXE][5SV/EXN] |
| 3 | B-402-37129 | | VALVE,COMBINATION | ﾊﾞﾙﾌﾞ | 1 | [5SV] |
| - | B-402-37128 | | VALVE,COMBINATION | ﾊﾞﾙﾌﾞ | 1 | [5SV/VLL][5SV/SIL] |
| - | B-402-37128 | | VALVE,COMBINATION | ﾊﾞﾙﾌﾞ | 1 | C,D,H,J |
| | | | | | | [5SV/EXE][5SV/EXN] |
| 4 | B-402-36924 | | VALVE,SECTION | ﾊﾞﾙﾌﾞ | 3 | [5SV] |
| 5 | B-402-30905-05 | | BOLT,STUD | ﾎﾞﾙﾄ | 3 | [5SV] |
| 6 | B-023-06632-41 | | NUT | ﾅｯﾄ | 3 | [5SV] |
| 7 | B-402-00704-13 | | PLATE,NAME | ﾌﾟﾚｰﾄ | 1 | [5SV] |
| 8 | B-026-50103 | | RIVET | ﾘﾍﾞｯﾄ | 2 | [5SV] |
| 9 | 22N57-32041 | | BOLT | ﾎﾞﾙﾄ | 3 | [5SV] |
| 10 | 216G7-32021 | | WASHER,PLANE | ﾜｯｼｬ | 3 | [5SV] |
| 11 | 22N57-42201 | | RUBBER,VALVE | ﾗﾊﾞｰ | 6 | [5SV] |
| 12 | 22N57-42211 | | COLLAR | ｶﾗｰ | 3 | [5SV] |

# FIG.174 CONTROL VALVE FITTING

(F7027350) ｺﾝﾄﾛｰﾙﾊﾞﾙﾌﾞﾌｨｯﾃｨﾝｸﾞ

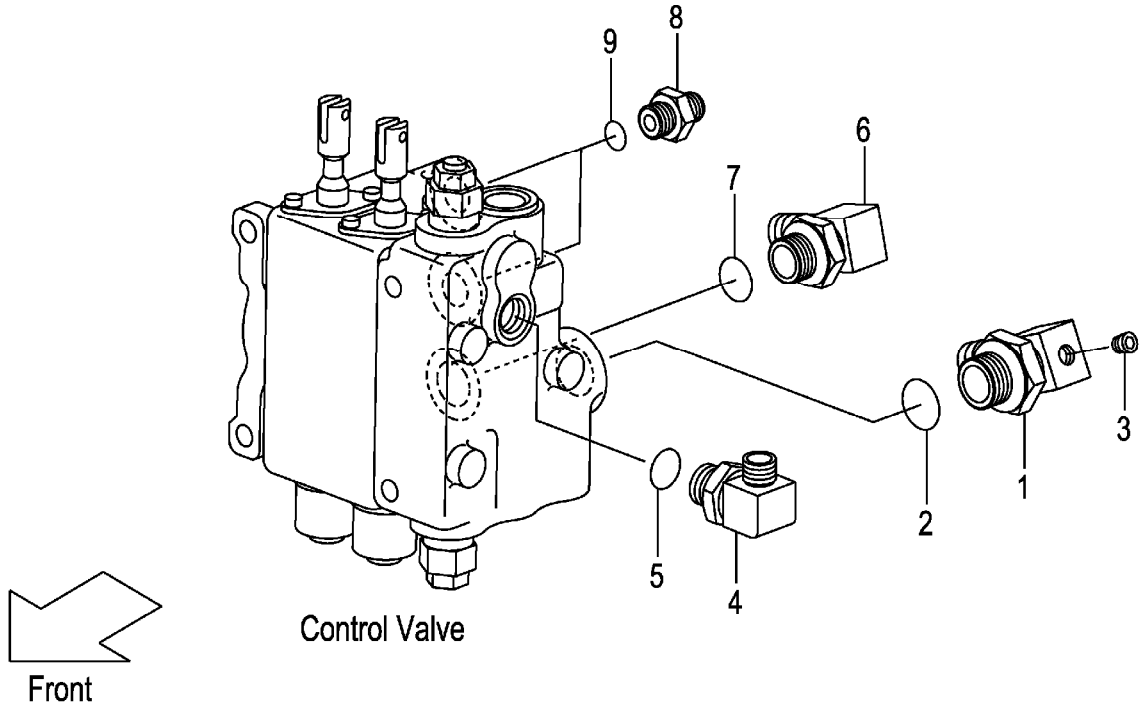


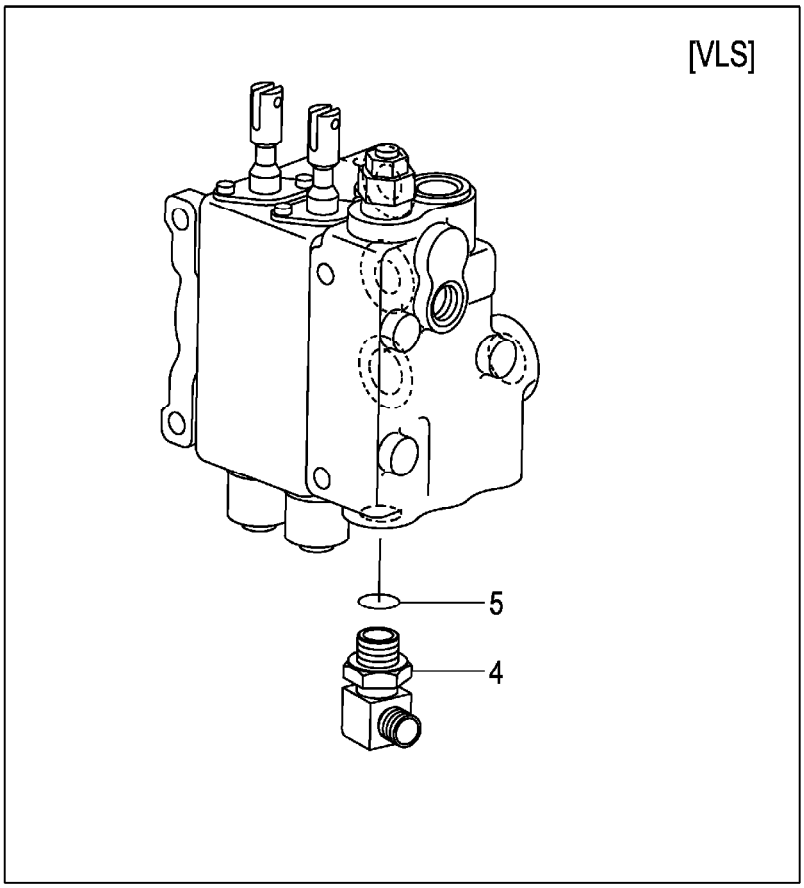

A:FG20C13 FG20T13 FG25C13 FG25T13 C:FD20C13 FD20T13 FD25C13 FD25T13 (F7027350)
B:FG20C3 FG20T3 FG25C3 FG25T3 FG20W3 FG25W3 D:FD20C3 FD20T3 FD25C3 FD25T3 FD20W3 FD25W3

| Item No | Part No. | Mark | Description | | Req'd | Remarks : Serial No. |
|---|---|---|---|---|---|---|
| A1 | 22N57-63011 | | ELBOW-ASSY | ｴﾙﾎﾞｱｯｾﾝ | 1 | INC.1-3 |
| 1 | NO PART NO. | # | ELBOW | ｴﾙﾎﾞ | 1 | |
| 2 | 03320-00240 | | O-RING | Oﾘﾝｸﾞ | 1 | |
| 3 | 23870-52871 | | PLUG,SUNK | ﾌﾟﾗｸﾞ | 1 | |
| A2 | 04150-20202 | | ELBOW-ASSY | ｴﾙﾎﾞｱｯｾﾝ | 1 | INC.4,5 |
| - | 04150-20202 | | ELBOW-ASSY | ｴﾙﾎﾞｱｯｾﾝ | 2 | [VLS] INC.4,5 |
| 4 | NO PART NO. | # | ELBOW | ｴﾙﾎﾞ | 1 | |
| - | NO PART NO. | # | ELBOW | ｴﾙﾎﾞ | 2 | [VLS] |
| 5 | 03320-00110 | | O-RING | Oﾘﾝｸﾞ | 1 | |
| - | 03320-00110 | | O-RING | Oﾘﾝｸﾞ | 2 | [VLS] |
| A2 | 04150-20404 | | ELBOW-ASSY | ｴﾙﾎﾞｱｯｾﾝ | 1 | INC.6,7 |
| 6 | NO PART NO. | # | ELBOW | ｴﾙﾎﾞ | 1 | |
| 7 | 03320-00180 | | O-RING | Oﾘﾝｸﾞ | 1 | |
| A3 | 277H7-60601 | | NIPPLE-ASSY | ﾆｯﾌﾟﾙｱｯｾﾝ | 2 | INC.8,9 |
| 8 | NO PART NO. | # | NIPPLE | ﾆｯﾌﾟﾙ | 2 | |
| 9 | 03320-00140 | | O-RING | Oﾘﾝｸﾞ | 2 | |

# FIG.175 VALVE CONTROL [2SV]

(F70273A0) ﾊﾞﾙﾌﾞｺﾝﾄﾛｰﾙ

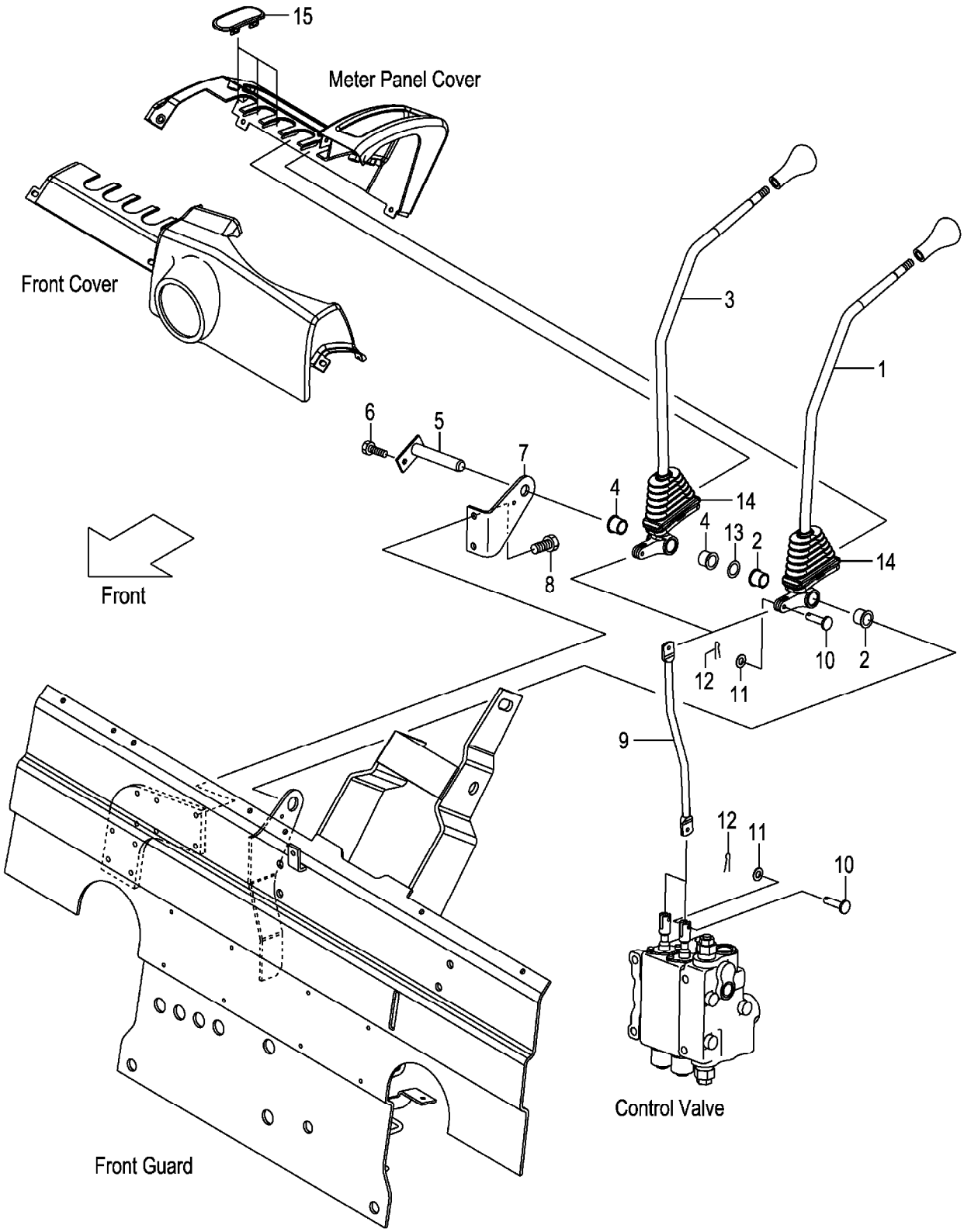

A:FG20C13 FG20T13 FG25C13 FG25T13 C:FD20C13 FD20T13 FD25C13 FD25T13 (F70273A0)
B:FG20C3 FG20T3 FG25C3 FG25T3 FG20W3 FG25W3 D:FD20C3 FD20T3 FD25C3 FD25T3 FD20W3 FD25W3

| Item No | Part No. | Mark | Description | | Req'd | Remarks : Serial No. |
|---|---|---|---|---|---|---|
| A1 | 22N57-40011 | | LEVER-ASSY,LIFT | ﾘﾌﾄﾚﾊﾞｰｱｯｾﾝ | 1 | INC.1,2 |
| 1 | NO PART NO. | # | LEVER,LIFT | ﾚﾊﾞｰ | 1 | |
| 2 | 214A7-42071 | | BUSHING | ﾌﾞｯｼﾝｸﾞ | 2 | |
| A2 | 22N57-40021 | | LEVER-ASSY,TILT | ﾃｨﾙﾄﾚﾊﾞｰｱｯｾﾝ | 1 | INC.3,4 |
| 3 | NO PART NO. | # | LEVER,TILT | ﾚﾊﾞｰ | 1 | |
| 4 | 214A7-42071 | | BUSHING | ﾌﾞｯｼﾝｸﾞ | 2 | |
| 5 | 23647-40041 | | SHAFT,2SV-LEVER | ｼｬﾌﾄ | 1 | |
| - | 529F3-70401 | | SHAFT,2SV-LEVER | ｼｬﾌﾄ | 1 | [FC] |
| 6 | 01183-06012 | | BOLT | ﾎﾞﾙﾄ | 1 | |
| 7 | 22N57-42001 | | BRACKET,VALVE-LEVER | ﾌﾞﾗｹｯﾄ | 1 | |
| 8 | 01183-08012 | | BOLT | ﾎﾞﾙﾄ | 2 | |
| 9 | 22N57-42101 | | JOINT | ｼﾞｮｲﾝﾄ | 2 | |
| 10 | 22N57-42121 | | PIN,CLEVIS | ﾋﾟﾝ | 4 | |
| 11 | 02000-00005 | | WASHER | ﾜｯｼｬ | 4 | |
| 12 | 02200-16010 | | PIN,COTTER | ﾋﾟﾝ | 4 | |
| 13 | 22517-40051 | | SHIM,T-0.2 | ｼﾑ | 3 | |
| 14 | 22N57-42151 | | BOOT | ﾌﾞｰﾂ | 2 | |
| 15 | 22N57-42161 | | COVER,VALVE-LEVER | ｶﾊﾞｰ | 3 | |

# FIG.176 VALVE CONTROL [3SV]

(F70273B0) ﾊﾞﾙﾌﾞｺﾝﾄﾛｰﾙ

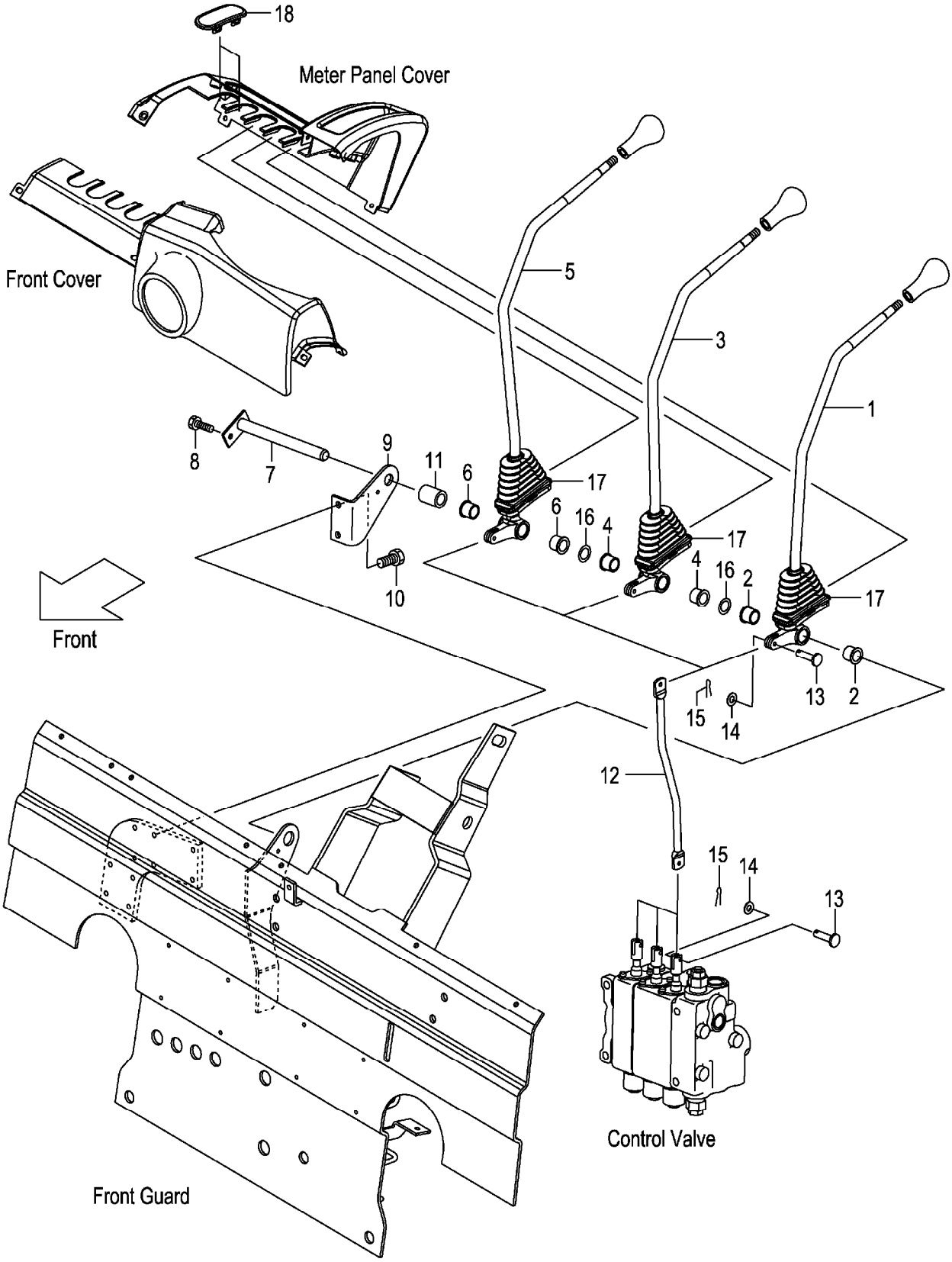

A:FG20C13 FG20T13 FG25C13 FG25T13 C:FD20C13 FD20T13 FD25C13 FD25T13 (F70273B0)
B:FG20C3 FG20T3 FG25C3 FG25T3 FG20W3 FG25W3 D:FD20C3 FD20T3 FD25C3 FD25T3 FD20W3 FD25W3

| Item No | Part No. | Mark | Description | | Req'd | Remarks : Serial No. |
|---|---|---|---|---|---|---|
| A1 | 22N57-40011 | | LEVER-ASSY,LIFT | ﾘﾌﾄﾚﾊﾞｰｱｯｾﾝ | 1 | [3SV] INC.1,2 |
| 1 | NO PART NO. | # | LEVER,LIFT | ﾚﾊﾞｰ | 1 | [3SV] |
| 2 | 214A7-42071 | | BUSHING | ﾌﾞｯｼﾝｸﾞ | 2 | [3SV] |
| A2 | 22N57-40021 | | LEVER-ASSY,TILT | ﾃｨﾙﾄﾚﾊﾞｰｱｯｾﾝ | 1 | [3SV] INC.3,4 |
| 3 | NO PART NO. | # | LEVER,TILT | ﾚﾊﾞｰ | 1 | [3SV] |
| 4 | 214A7-42071 | | BUSHING | ﾌﾞｯｼﾝｸﾞ | 2 | [3SV] |
| A3 | 22N57-40031 | | LEVER-ASSY,THIRD | ｻｰﾄﾞﾚﾊﾞｰｱｯｾﾝ | 1 | [3SV] INC.5,6 |
| 5 | NO PART NO. | # | LEVER,THIRD | ﾚﾊﾞｰ | 1 | [3SV] |
| 6 | 214A7-42071 | | BUSHING | ﾌﾞｯｼﾝｸﾞ | 2 | [3SV] |
| 7 | 23457-42041 | | SHAFT,3&4SV-LEVER | ｼｬﾌﾄ | 1 | [3SV] |
| - | 529F3-70411 | | SHAFT,3&4SV-LEVER | ｼｬﾌﾄ | 1 | [3SV/FC] |
| 8 | 01183-06012 | | BOLT | ﾎﾞﾙﾄ | 1 | [3SV] |
| 9 | 22N57-42001 | | BRACKET,VALVE-LEVER | ﾌﾞﾗｹｯﾄ | 1 | [3SV] |
| 10 | 01183-08012 | | BOLT | ﾎﾞﾙﾄ | 2 | [3SV] |
| 11 | 23657-42131 | | COLLAR | ｶﾗｰ | 1 | [3SV] |
| 12 | 22N57-42101 | | JOINT | ｼﾞｮｲﾝﾄ | 3 | [3SV] |
| 13 | 22N57-42121 | | PIN,CLEVIS | ﾋﾟﾝ | 6 | [3SV] |
| 14 | 02000-00005 | | WASHER | ﾜｯｼｬ | 6 | [3SV] |
| 15 | 02200-16010 | | PIN,COTTER | ﾋﾟﾝ | 6 | [3SV] |
| 16 | 22517-40051 | | SHIM,T-0.2 | ｼﾑ | 6 | [3SV] |
| 17 | 22N57-42151 | | BOOT | ﾌﾞｰﾂ | 3 | [3SV] |
| 18 | 22N57-42161 | | COVER,VALVE-LEVER | ｶﾊﾞｰ | 2 | [3SV] |

# FIG.177 VALVE CONTROL [4SV]

(F70273C0) ﾊﾞﾙﾌﾞｺﾝﾄﾛｰﾙ

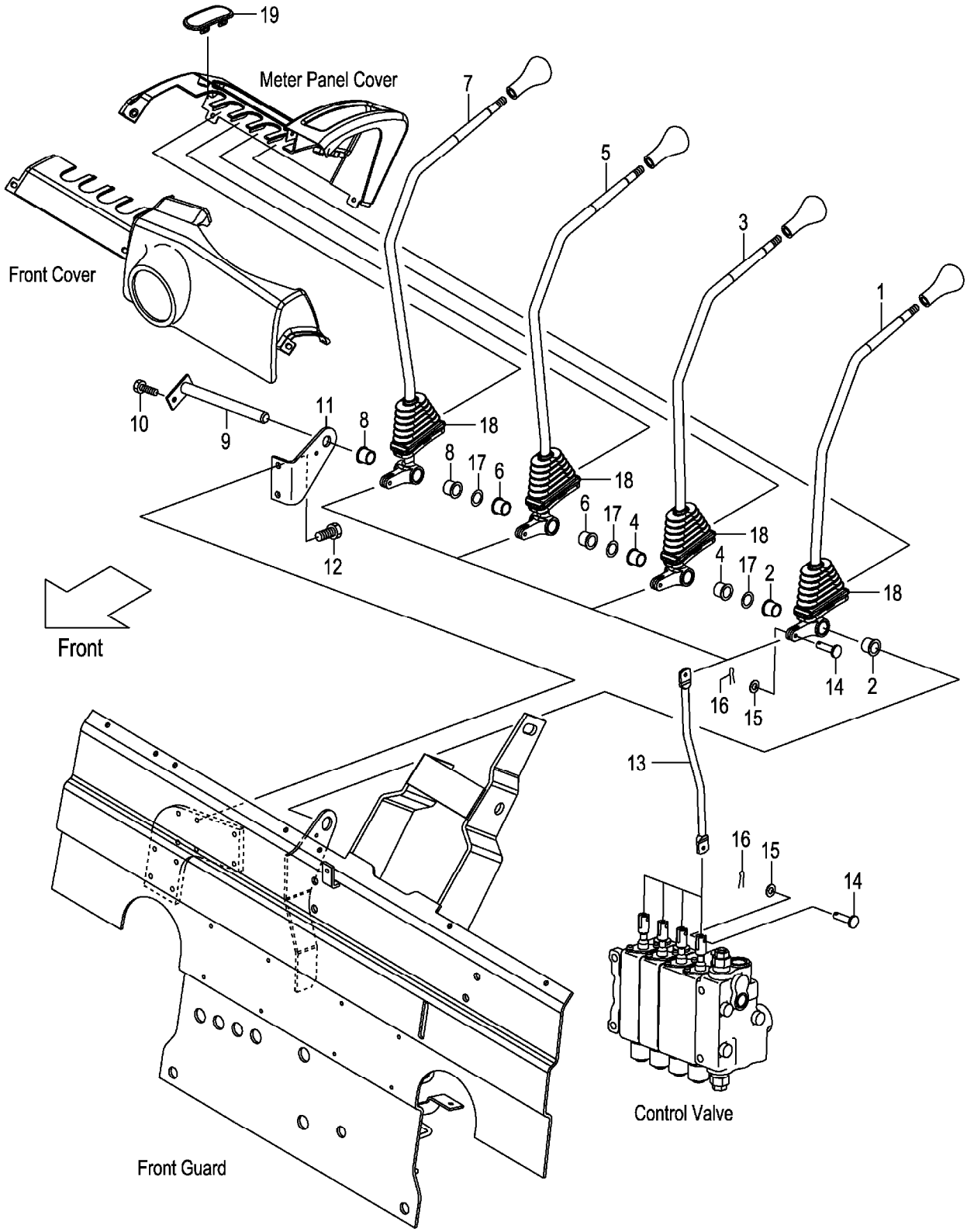

A:FG20C13 FG20T13 FG25C13 FG25T13 C:FD20C13 FD20T13 FD25C13 FD25T13 (F70273C0)
B:FG20C3 FG20T3 FG25C3 FG25T3 FG20W3 FG25W3 D:FD20C3 FD20T3 FD25C3 FD25T3 FD20W3 FD25W3

| Item No | Part No. | Mark | Description | | Req'd | Remarks : Serial No. |
|---|---|---|---|---|---|---|
| A1 | 22N57-40011 | | LEVER-ASSY,LIFT | ﾘﾌﾄﾚﾊﾞｰｱｯｾﾝ | 1 | [4SV] INC.1,2 |
| 1 | NO PART NO. | # | LEVER,LIFT | ﾚﾊﾞｰ | 1 | [4SV] |
| 2 | 214A7-42071 | | BUSHING | ﾌﾞｯｼﾝｸﾞ | 2 | [4SV] |
| A2 | 22N57-40021 | | LEVER-ASSY,TILT | ﾃｨﾙﾄﾚﾊﾞｰｱｯｾﾝ | 1 | [4SV] INC.3,4 |
| 3 | NO PART NO. | # | LEVER,TILT | ﾚﾊﾞｰ | 1 | [4SV] |
| 4 | 214A7-42071 | | BUSHING | ﾌﾞｯｼﾝｸﾞ | 2 | [4SV] |
| A3 | 22N57-40031 | | LEVER-ASSY,THIRD | ｻｰﾄﾞﾚﾊﾞｰｱｯｾﾝ | 1 | [4SV] INC.5,6 |
| 5 | NO PART NO. | # | LEVER,THIRD | ﾚﾊﾞｰ | 1 | [4SV] |
| 6 | 214A7-42071 | | BUSHING | ﾌﾞｯｼﾝｸﾞ | 2 | [4SV] |
| A4 | 22N57-40041 | | LEVER-ASSY,FOURTH | ﾌｫｰｽﾚﾊﾞｰｱｯｾﾝ | 1 | [4SV] INC.7,8 |
| 7 | NO PART NO. | # | LEVER,FOURTH | ﾚﾊﾞｰ | 1 | [4SV] |
| 8 | 214A7-42071 | | BUSHING | ﾌﾞｯｼﾝｸﾞ | 2 | [4SV] |
| 9 | 23457-42041 | | SHAFT,3&4SV-LEVER | ｼｬﾌﾄ | 1 | [4SV] |
| - | 529F3-70411 | | SHAFT,3&4SV-LEVER | ｼｬﾌﾄ | 1 | [4SV/FC] |
| 10 | 01183-06012 | | BOLT | ﾎﾞﾙﾄ | 1 | [4SV] |
| 11 | 22N57-42001 | | BRACKET,VALVE-LEVER | ﾌﾞﾗｹｯﾄ | 1 | [4SV] |
| 12 | 01183-08012 | | BOLT | ﾎﾞﾙﾄ | 2 | [4SV] |
| 13 | 22N57-42101 | | JOINT | ｼﾞｮｲﾝﾄ | 4 | [4SV] |
| 14 | 22N57-42121 | | PIN,CLEVIS | ﾋﾟﾝ | 8 | [4SV] |
| 15 | 02000-00005 | | WASHER | ﾜｯｼｬ | 8 | [4SV] |
| 16 | 02200-16010 | | PIN,COTTER | ﾋﾟﾝ | 8 | [4SV] |
| 17 | 22517-40051 | | SHIM,T-0.2 | ｼﾑ | 9 | [4SV] |
| 18 | 22N57-42151 | | BOOT | ﾌﾞｰﾂ | 4 | [4SV] |
| 19 | 22N57-42161 | | COVER,VALVE-LEVER | ｶﾊﾞｰ | 1 | [4SV] |

# FIG.178 VALVE CONTROL [5SV]

(F70273D0) ﾊﾞﾙﾌﾞｺﾝﾄﾛｰﾙ

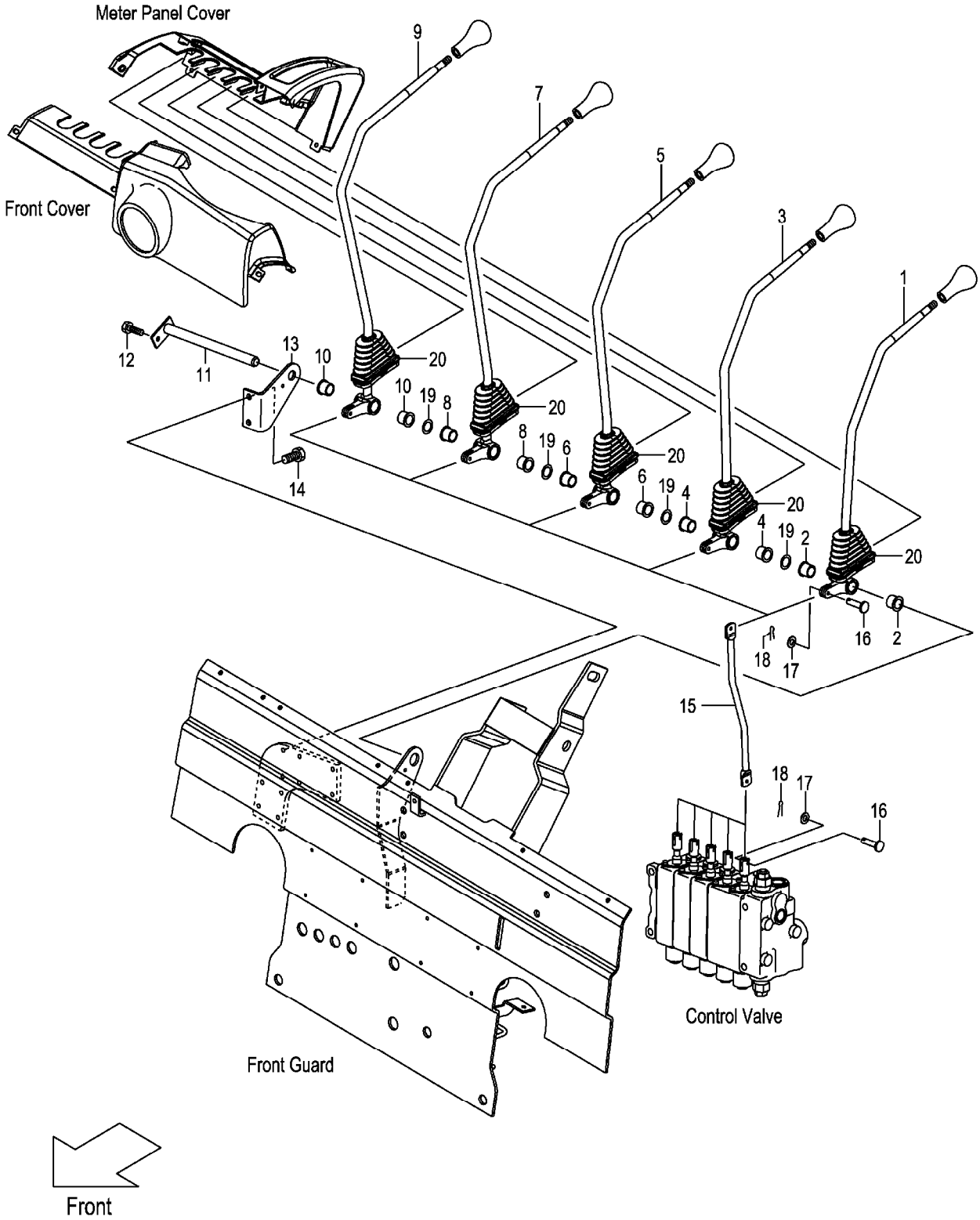

A:FG20C13 FG20T13 FG25C13 FG25T13 C:FD20C13 FD20T13 FD25C13 FD25T13 (F70273D0)
B:FG20C3 FG20T3 FG25C3 FG25T3 FG20W3 FG25W3 D:FD20C3 FD20T3 FD25C3 FD25T3 FD20W3 FD25W3

| Item No | Part No. | Mark | Description | | Req'd | Remarks : Serial No. |
|---|---|---|---|---|---|---|
| A1 | 22N57-40011 | | LEVER-ASSY,LIFT | ﾘﾌﾄﾚﾊﾞｰｱｯｾﾝ | 1 | [5SV] INC.1,2 |
| 1 | NO PART NO. | # | LEVER,LIFT | ﾚﾊﾞｰ | 1 | [5SV] |
| 2 | 214A7-42071 | | BUSHING | ﾌﾞｯｼﾝｸﾞ | 2 | [5SV] |
| A2 | 22N57-40021 | | LEVER-ASSY,TILT | ﾃｨﾙﾄﾚﾊﾞｰｱｯｾﾝ | 1 | [5SV] INC.3,4 |
| 3 | NO PART NO. | # | LEVER,TILT | ﾚﾊﾞｰ | 1 | [5SV] |
| 4 | 214A7-42071 | | BUSHING | ﾌﾞｯｼﾝｸﾞ | 2 | [5SV] |
| A3 | 22N57-40031 | | LEVER-ASSY,THIRD | ｻｰﾄﾞﾚﾊﾞｰｱｯｾﾝ | 1 | [5SV] INC.5,6 |
| 5 | NO PART NO. | # | LEVER,THIRD | ﾚﾊﾞｰ | 1 | [5SV] |
| 6 | 214A7-42071 | | BUSHING | ﾌﾞｯｼﾝｸﾞ | 2 | [5SV] |
| A4 | 22N57-40041 | | LEVER-ASSY,FOURTH | ﾌｫｰｽﾚﾊﾞｰｱｯｾﾝ | 1 | [5SV] INC.7,8 |
| 7 | NO PART NO. | # | LEVER,FOURTH | ﾚﾊﾞｰ | 1 | [5SV] |
| 8 | 214A7-42071 | | BUSHING | ﾌﾞｯｼﾝｸﾞ | 2 | [5SV] |
| A5 | 22N57-40051 | | LEVER-ASSY,FIFTH | ﾌｨﾌｽﾚﾊﾞｰｱｯｾﾝ | 1 | [5SV] INC.9,10 |
| 9 | NO PART NO. | # | LEVER,FIFTH | ﾚﾊﾞｰ | 1 | [5SV] |
| 10 | 214A7-42071 | | BUSHING | ﾌﾞｯｼﾝｸﾞ | 2 | [5SV] |
| 11 | 55593-02371 | | SHAFT,5SV-LEVER | ｼｬﾌﾄ | 1 | [5SV] |
| - | 529F3-70421 | | SHAFT,5SV-LEVER | ｼｬﾌﾄ | 1 | [5SV/FC] |
| 12 | 01183-06012 | | BOLT | ﾎﾞﾙﾄ | 1 | [5SV] |
| 13 | 22N57-42001 | | BRACKET,VALVE-LEVER | ﾌﾞﾗｹｯﾄ | 1 | [5SV] |
| 14 | 01183-08012 | | BOLT | ﾎﾞﾙﾄ | 2 | [5SV] |
| 15 | 22N57-42101 | | JOINT | ｼﾞｮｲﾝﾄ | 5 | [5SV] |
| 16 | 22N57-42121 | | PIN,CLEVIS | ﾋﾟﾝ | 10 | [5SV] |
| 17 | 02000-00005 | | WASHER | ﾜｯｼｬ | 10 | [5SV] |
| 18 | 02200-16010 | | PIN,COTTER | ﾋﾟﾝ | 10 | [5SV] |
| 19 | 22517-40051 | | SHIM,T-0.2 | ｼﾑ | 12 | [5SV] |
| 20 | 22N57-42151 | | BOOT | ﾌﾞｰﾂ | 5 | [5SV] |

# FIG.179 VALVE CONTROL KNOB

(F70273E0) ﾊﾞﾙﾌﾞｺﾝﾄﾛｰﾙﾉﾌﾞ

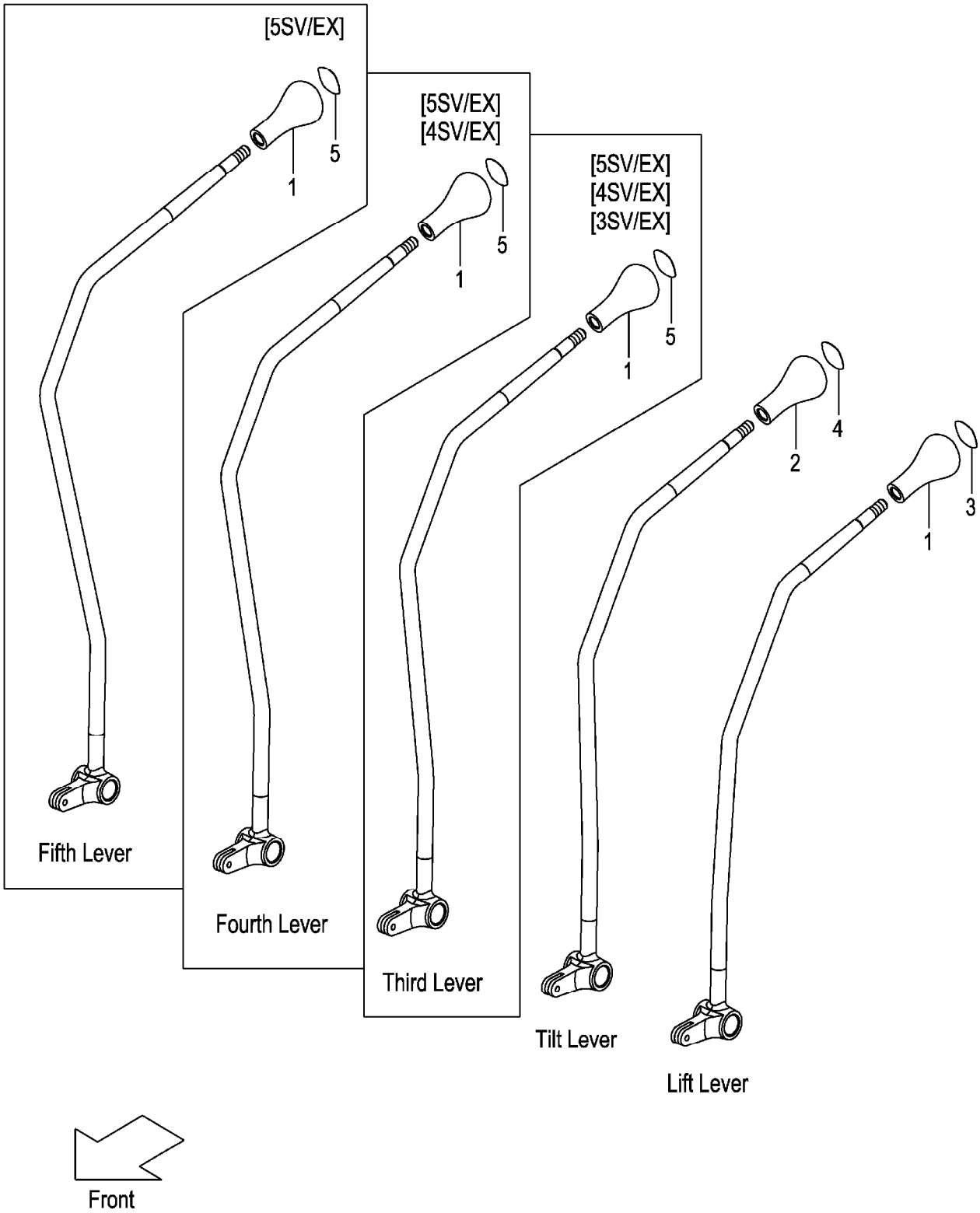

A:FG20C13 FG20T13 FG25C13 FG25T13 D:FD20C13 FD20T13 FD25C13 FD25T13
B:FG20C3 FG20T3 FG25C3 FG25T3 E:FD20C3 FD20T3 FD25C3 FD25T3
C:FG20W3 FG25W3 F:FD20W3 FD25W3

**FIG.179**
(F70273E0)

| Item No | Part No. | Mark | Description | Req'd | Remarks : Serial No. |
|---|---|---|---|---|---|
| 1 | 214A7-42181 | | KNOB,VALVE-LEVER ﾉﾌﾞ | 1 | |
| - | 214A7-42181 | | KNOB,VALVE-LEVER ﾉﾌﾞ | 2 | B,E [3SV/EX] |
| - | 214A7-42181 | | KNOB,VALVE-LEVER ﾉﾌﾞ | 3 | B,E [4SV/EX] |
| - | 214A7-42181 | | KNOB,VALVE-LEVER ﾉﾌﾞ | 4 | B,E [5SV/EX] |
| 2 | 281E7-42101 | | KNOB,VALVE-LEVER ﾉﾌﾞ | 1 | |
| 3 | 214A7-42191 | | DECAL,SYMBOL,LIFT ﾃﾞｶﾙ | 1 | |
| 4 | 214A7-42201 | | DECAL,SYMBOL,TILT ﾃﾞｶﾙ | 1 | |
| 5 | 514A2-72411 | | DECAL,SYMBOL,SPACE ﾃﾞｶﾙ | 1 | B,E [3SV/EX] |
| - | 514A2-72411 | | DECAL,SYMBOL,SPACE ﾃﾞｶﾙ | 2 | B,E [4SV/EX] |
| - | 514A2-72411 | | DECAL,SYMBOL,SPACE ﾃﾞｶﾙ | 3 | B,E [5SV/EX] |

# HYDRAULIC LINE (MAIN)(1/4)
# FIG.180 (GASOLINE:CLUTCH & TOR-CON)

(F7027610) ﾊｲﾄﾞﾛﾘｯｸﾗｲﾝ(ﾒｲﾝ)(1/4)

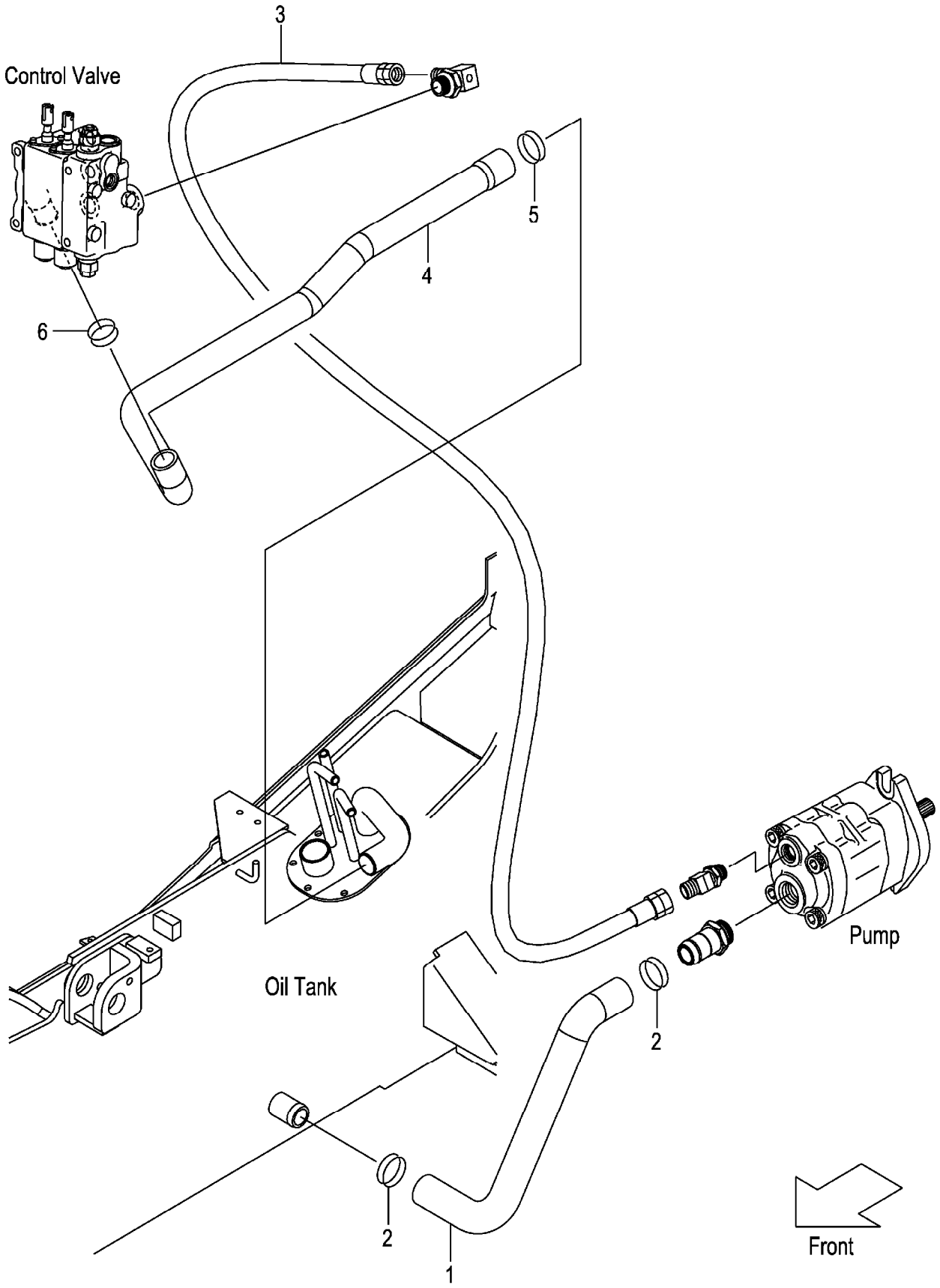

A:FG20C13 FG20T13 FG25C13 FG25T13
B:FG20C3 FG20T3 FG25C3 FG25T3

| Item No | Part No. | Mark | Description | | Req'd | Remarks : Serial No. |
|---|---|---|---|---|---|---|
| 1 | 22B57-62001 | | HOSE,SUCTION | ﾎｰｽ | 1 | |
| 2 | 04911-00046 | | CLIP | ｸﾘｯﾌﾟ | 2 | |
| 3 | 22N57-63001 | | HOSE | ﾎｰｽ | 1 | A:1-110 |
| | | | | | | B:1-121 |
| - | 04691-04123 | | HOSE | ﾎｰｽ | 1 | A:111- |
| | | | | | | B:122- |
| 4 | 22N57-62101 | | HOSE,RETURN | ﾎｰｽ | 1 | |
| - | 22N57-62201 | | HOSE,RETURN | ﾎｰｽ | 1 | [4SV][5SV] |
| 5 | 04911-00044 | | CLIP | ｸﾘｯﾌﾟ | 1 | A:1-110 |
| | | | | | | B:1-121 |
| - | 04911-00042 | | CLIP | ｸﾘｯﾌﾟ | 1 | A:111- |
| | | | | | | B:122- |
| 6 | 04911-00040 | | CLIP | ｸﾘｯﾌﾟ | 1 | |

# FIG.181 HYDRAULIC LINE (MAIN)(1/4)(GASOLINE:OIL CLUTCH)

(F7027620) ﾊｲﾄﾞﾛﾘｯｸﾗｲﾝ(ﾒｲﾝ)(1/4)

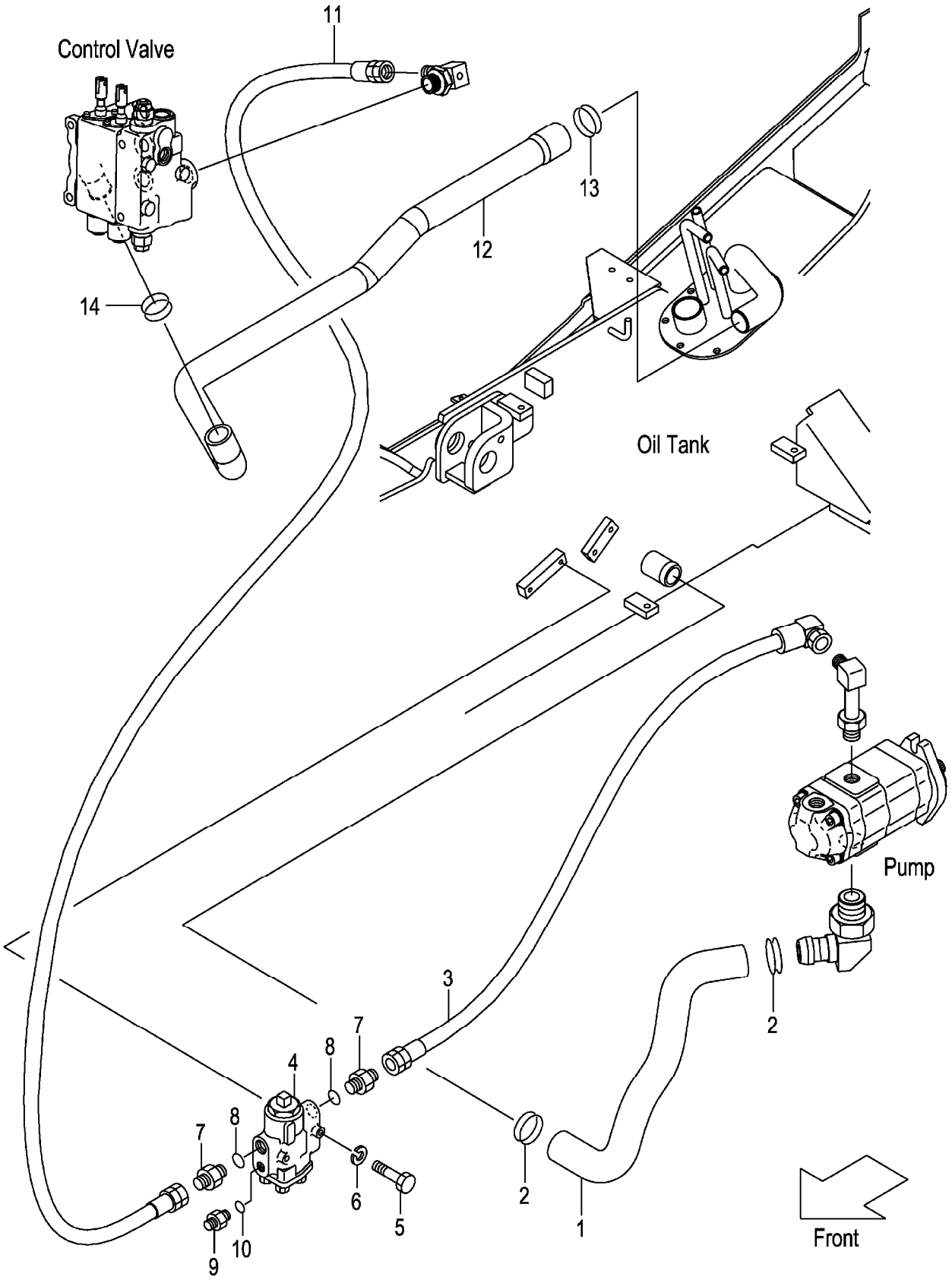

A:FG20W3 FG25W3

| Item No | Part No. | Mark | Description | | Req'd | Remarks : Serial No. |
|---|---|---|---|---|---|---|
| 1 | 22C47-62001 | | HOSE,SUCTION | ﾎｰｽ | 1 | |
| 2 | 04911-00046 | | CLIP | ｸﾘｯﾌﾟ | 2 | |
| 3 | 22C47-62101 | | HOSE | ﾎｰｽ | 1 | |
| 4 | 234H7-60301 | | VALVE,FLOW-PRIORITY | ﾊﾞﾙﾌﾞ | 1 | |
| 5 | 01100-06055 | | BOLT | ﾎﾞﾙﾄ | 2 | |
| 6 | 02010-00006 | | WASHER | ﾜｯｼｬ | 2 | |
| A1 | 04134-20404 | | NIPPLE-ASSY | ﾆｯﾌﾟﾙｱｯｾﾝ | 2 | INC.7,8 |
| 7 | NO PART NO. | # | NIPPLE | ﾆｯﾌﾟﾙ | 2 | |
| 8 | 03320-00180 | | O-RING | Oﾘﾝｸﾞ | 2 | |
| A2 | 23657-60311 | | NIPPLE-ASSY | ﾆｯﾌﾟﾙｱｯｾﾝ | 1 | INC.9,10 |
| 9 | NO PART NO. | # | NIPPLE | ﾆｯﾌﾟﾙ | 1 | |
| 10 | 03320-00140 | | O-RING | Oﾘﾝｸﾞ | 1 | |
| 11 | 04691-04070 | | HOSE | ﾎｰｽ | 1 | |
| 12 | 22N57-62101 | | HOSE,RETURN | ﾎｰｽ | 1 | |
| - | 22N57-62201 | | HOSE,RETURN | ﾎｰｽ | 1 | [4SV][5SV] |
| 13 | 04911-00044 | | CLIP | ｸﾘｯﾌﾟ | 1 | 1-121 |
| - | 04911-00042 | | CLIP | ｸﾘｯﾌﾟ | 1 | 122- |
| 14 | 04911-00040 | | CLIP | ｸﾘｯﾌﾟ | 1 | |

# HYDRAULIC LINE (MAIN)(1/4)
# FIG.182 (DIESEL:CLUTCH & TOR-CON)

(F7027630) ﾊｲﾄﾞﾛﾘｯｸﾗｲﾝ(ﾒｲﾝ)(1/4)

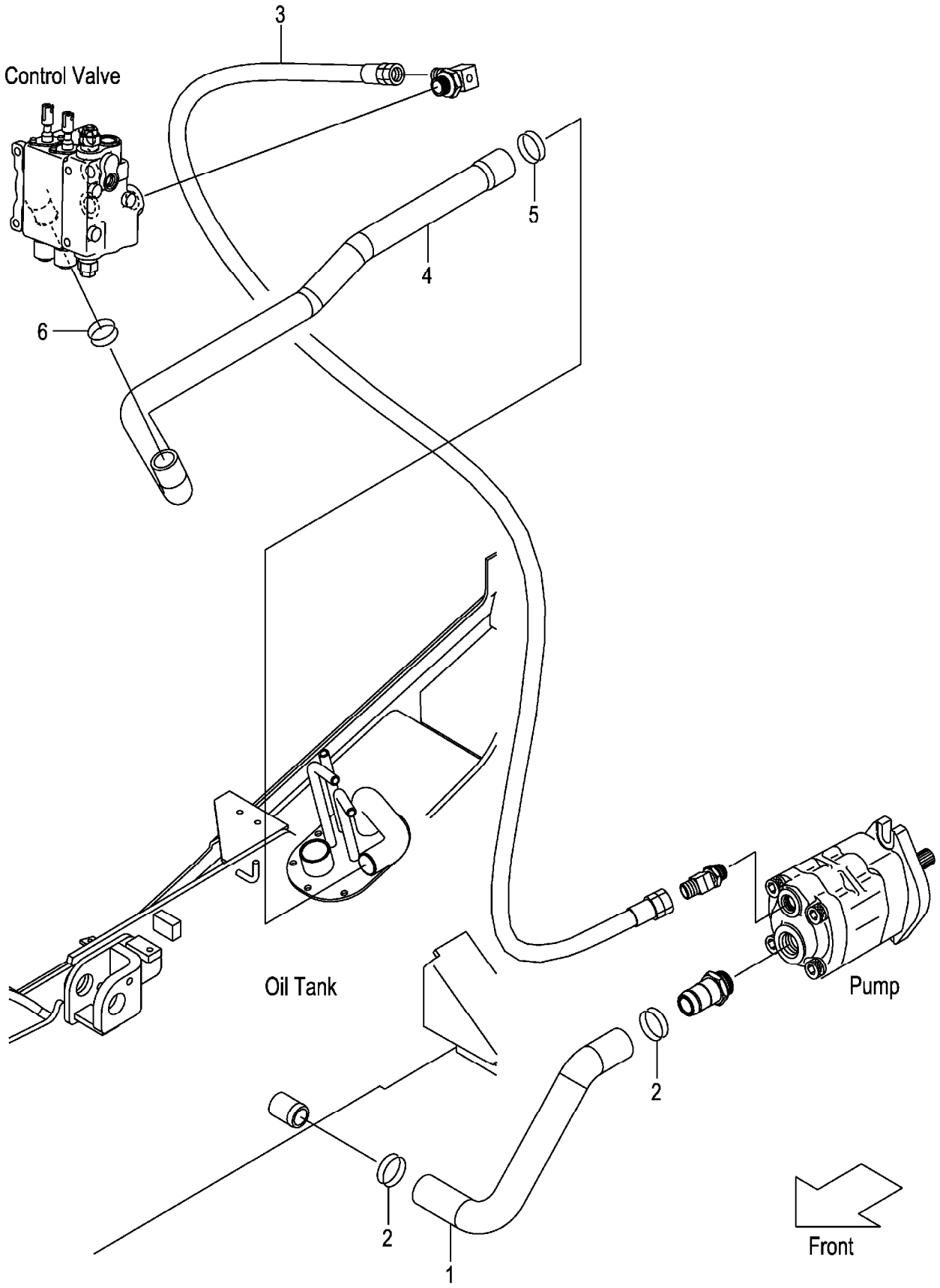

A:FD20C13 FD20T13 FD25C13 FD25T13
B:FD20C3 FD20T3 FD25C3 FD25T3

| Item No | Part No. | Mark | Description | | Req'd | Remarks : Serial No. |
|---|---|---|---|---|---|---|
| 1 | 22N57-62001 | | HOSE,SUCTION | ﾎｰｽ | 1 | |
| 2 | 04911-00046 | | CLIP | ｸﾘｯﾌﾟ | 2 | |
| 3 | 22N57-63001 | | HOSE | ﾎｰｽ | 1 | A:1-110 |
| | | | | | | B:1-180 |
| - | 04691-04123 | | HOSE | ﾎｰｽ | 1 | A:111- |
| | | | | | | B:181- |
| 4 | 22N57-62101 | | HOSE,RETURN | ﾎｰｽ | 1 | |
| - | 22N57-62201 | | HOSE,RETURN | ﾎｰｽ | 1 | [4SV][5SV] |
| 5 | 04911-00044 | | CLIP | ｸﾘｯﾌﾟ | 1 | A:1-110 |
| | | | | | | B:1-180 |
| - | 04911-00042 | | CLIP | ｸﾘｯﾌﾟ | 1 | A:111- |
| | | | | | | B:181- |
| 6 | 04911-00040 | | CLIP | ｸﾘｯﾌﾟ | 1 | |

# FIG.183 HYDRAULIC LINE (MAIN)(1/4)(DIESEL:OIL CLUTCH)

(F7027640) ﾊｲﾄﾞﾛﾘｯｸﾗｲﾝ(ﾒｲﾝ)(1/4)

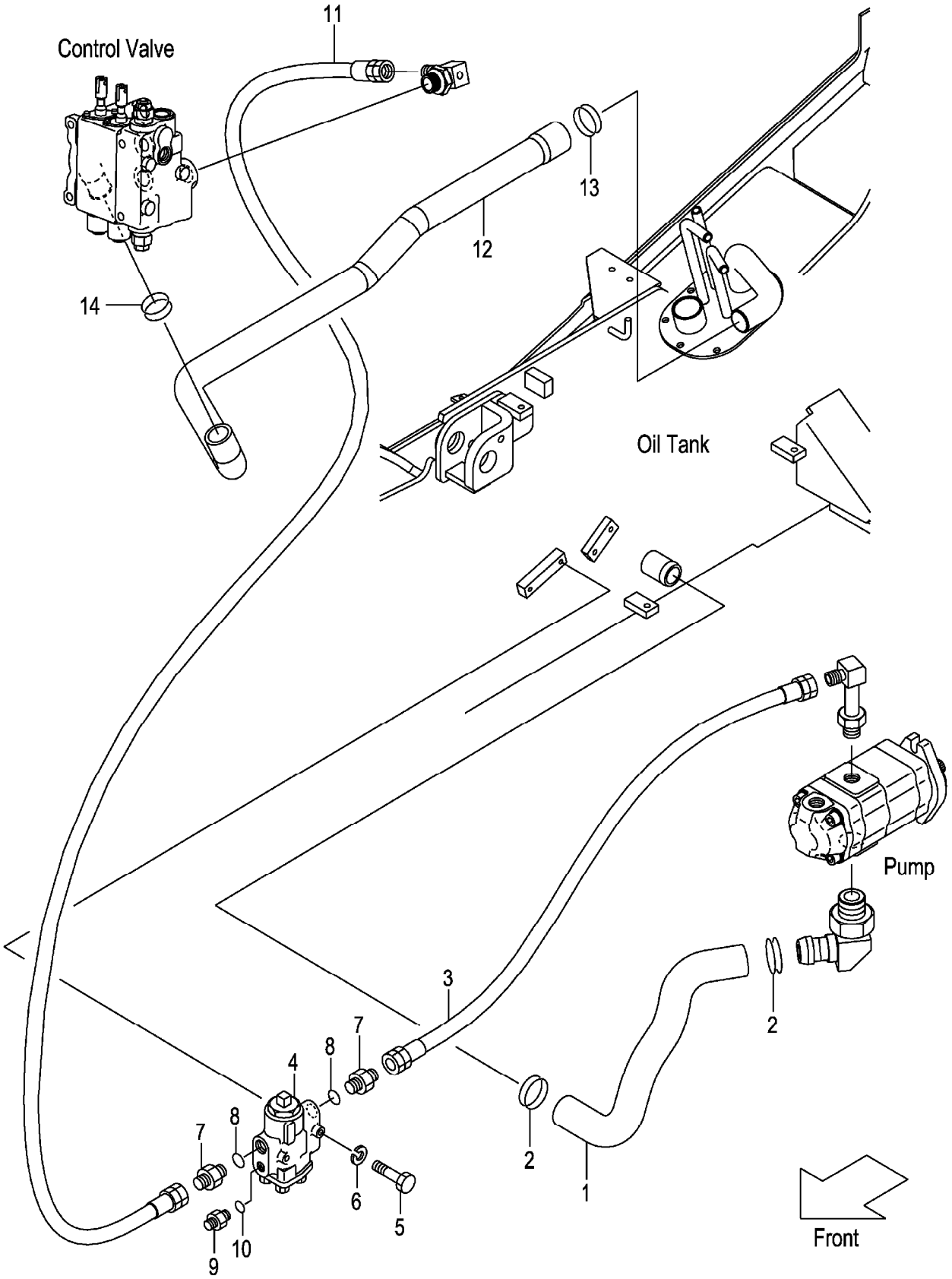

A:FD20W3 FD25W3

| Item No | Part No. | Mark | Description | | Req'd | Remarks : Serial No. |
|---|---|---|---|---|---|---|
| 1 | 22P47-62001 | | HOSE,SUCTION | ﾎｰｽ | 1 | |
| 2 | 04911-00046 | | CLIP | ｸﾘｯﾌﾟ | 2 | |
| 3 | 04691-04050 | | HOSE | ﾎｰｽ | 1 | |
| 4 | 234H7-60301 | | VALVE,FLOW-PRIORITY | ﾊﾞﾙﾌﾞ | 1 | |
| 5 | 01100-06055 | | BOLT | ﾎﾞﾙﾄ | 2 | |
| 6 | 02010-00006 | | WASHER | ﾜｯｼｬ | 2 | |
| A1 | 04134-20404 | | NIPPLE-ASSY | ﾆｯﾌﾟﾙｱｯｾﾝ | 2 | INC.7,8 |
| 7 | NO PART NO. | # | NIPPLE | ﾆｯﾌﾟﾙ | 2 | |
| 8 | 03320-00180 | | O-RING | Oﾘﾝｸﾞ | 2 | |
| A2 | 23657-60311 | | NIPPLE-ASSY | ﾆｯﾌﾟﾙｱｯｾﾝ | 1 | INC.9,10 |
| 9 | NO PART NO. | # | NIPPLE | ﾆｯﾌﾟﾙ | 1 | |
| 10 | 03320-00140 | | O-RING | Oﾘﾝｸﾞ | 1 | |
| 11 | 04691-04070 | | HOSE | ﾎｰｽ | 1 | |
| 12 | 22N57-62101 | | HOSE,RETURN | ﾎｰｽ | 1 | |
| - | 22N57-62201 | | HOSE,RETURN | ﾎｰｽ | 1 | [4SV][5SV] |
| 13 | 04911-00044 | | CLIP | ｸﾘｯﾌﾟ | 1 | 1-180 |
| - | 04911-00042 | | CLIP | ｸﾘｯﾌﾟ | 1 | 181- |
| 14 | 04911-00040 | | CLIP | ｸﾘｯﾌﾟ | 1 | |

# FIG.184 HYDRAULIC LINE (MAIN)(2/4)

(F7027650) ﾊｲﾄﾞﾛﾘｯｸﾗｲﾝ(ﾒｲﾝ)(2/4)

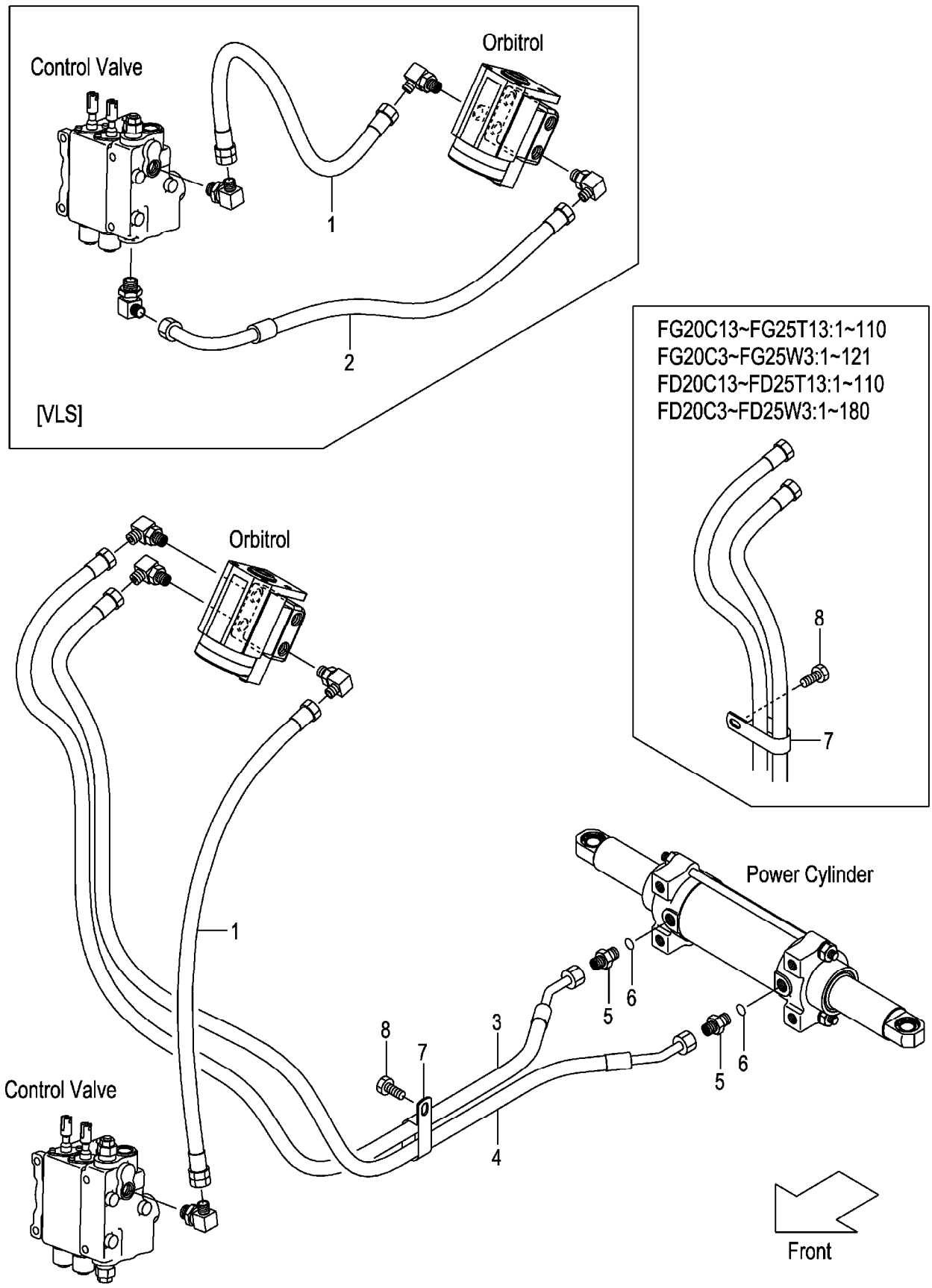

A:FG20C13 FG20T13 FG25C13 FG25T13 C:FD20C13 FD20T13 FD25C13 FD25T13 (F7027650)
B:FG20C3 FG20T3 FG25C3 FG25T3 FG20W3 FG25W3 D:FD20C3 FD20T3 FD25C3 FD25T3 FD20W3 FD25W3

| Item No | Part No. | Mark | Description | | Req'd | Remarks : Serial No. |
|---|---|---|---|---|---|---|
| 1 | 04691-02035 | | HOSE | ﾎｰｽ | 1 | A,C:1-110<br>B:1-121<br>D:1-180 |
| - | 04691-02038 | | HOSE | ﾎｰｽ | 1 | A,C:111-<br>B:122-<br>D:181- |
| - | 04691-02035 | | HOSE | ﾎｰｽ | 1 | [VLS] |
| 2 | 22N57-62801 | | HOSE | ﾎｰｽ | 1 | [VLS] |
| 3 | 22N57-62381 | | HOSE,PS,FRONT | ﾎｰｽ | 1 | |
| 4 | 22N57-62391 | | HOSE,PS,FRONT | ﾎｰｽ | 1 | |
| A1 | 04134-20303 | | NIPPLE-ASSY | ﾆｯﾌﾟﾙｱｯｾﾝ | 2 | INC.5,6 |
| 5 | NO PART NO. | # | NIPPLE | ﾆｯﾌﾟﾙ | 2 | |
| 6 | 03320-00140 | | O-RING | Oﾘﾝｸﾞ | 2 | |
| 7 | 26602-42221 | | CLIP | ｸﾘｯﾌﾟ | 2 | A,C:1-110<br>B:1-121<br>D:1-180 |
| - | 26602-42221 | | CLIP | ｸﾘｯﾌﾟ | 1 | A,C:111-<br>B:122-<br>D:181- |
| 8 | 01185-08016 | | BOLT | ﾎﾞﾙﾄ | 2 | A,C:1-110<br>B:1-121<br>D:1-180 |
| - | 01185-08016 | | BOLT | ﾎﾞﾙﾄ | 1 | A,C:111-<br>B:122-<br>D:181- |

## FIG.185 HYDRAULIC LINE (MAIN)(3/4)(CLUTCH)(TOR-CON)

(F7027660) ﾊｲﾄﾞﾛﾘｯｸﾗｲﾝ(ﾒｲﾝ)(3/4)

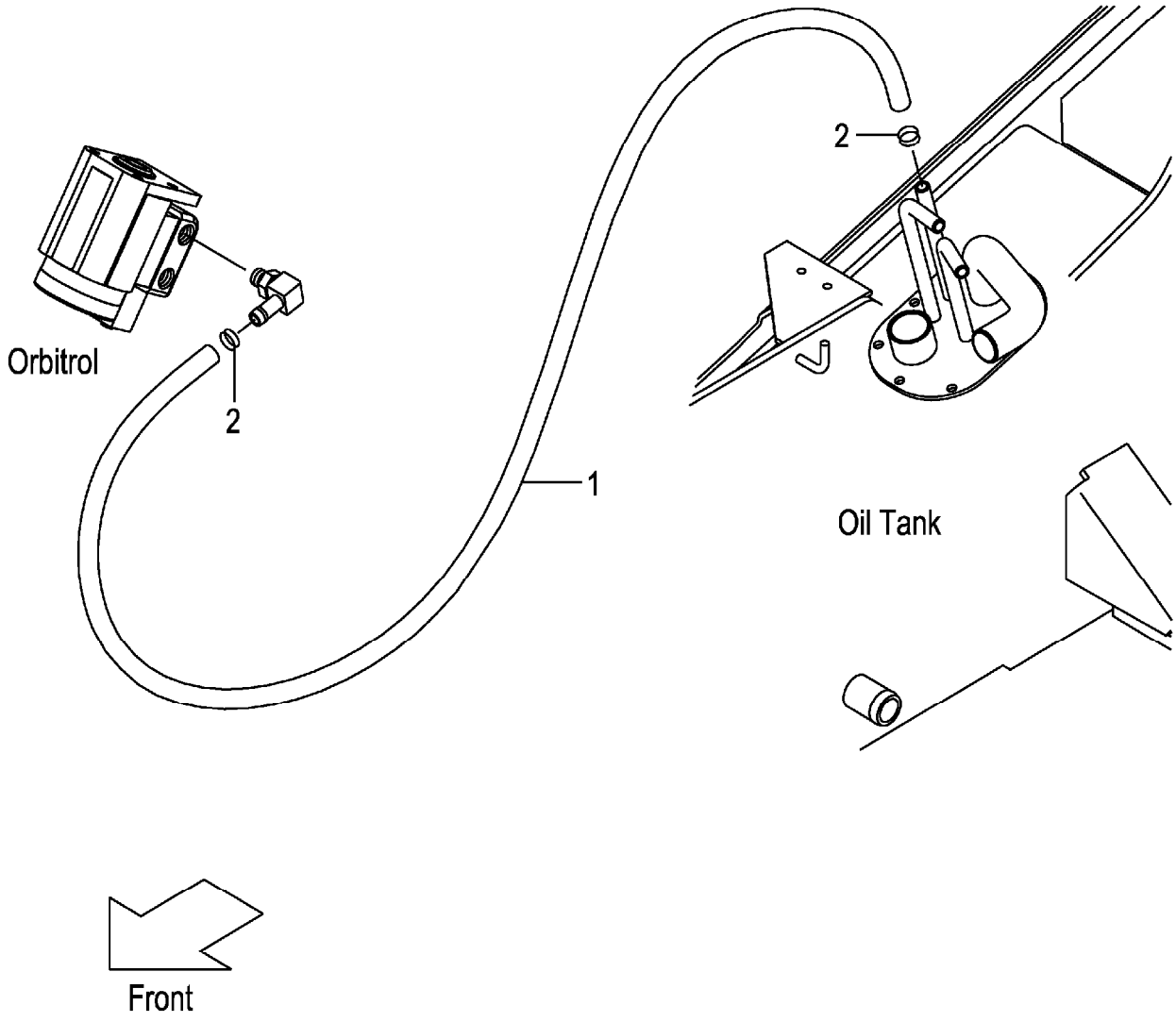

A:FG20C13 FG20T13 FG25C13 FG25T13 C:FD20C13 FD20T13 FD25C13 FD25T13
B:FG20C3 FG20T3 FG25C3 FG25T3 D:FD20C3 FD20T3 FD25C3 FD25T3

(F7027660)

| Item No | Part No. | Mark | Description | Req'd | Remarks : Serial No. |
|---|---|---|---|---|---|
| 1 | 04710-04190 | | HOSE ﾎｰｽ | 1 | |
| 2 | 04911-00020 | | CLIP ｸﾘｯﾌﾟ | 2 | |

# FIG.186 HYDRAULIC LINE (MAIN)(3/4)(OIL CLUTCH)

(F7027680) ﾊｲﾄﾞﾛﾘｯｸﾗｲﾝ(ﾒｲﾝ)(3/4)

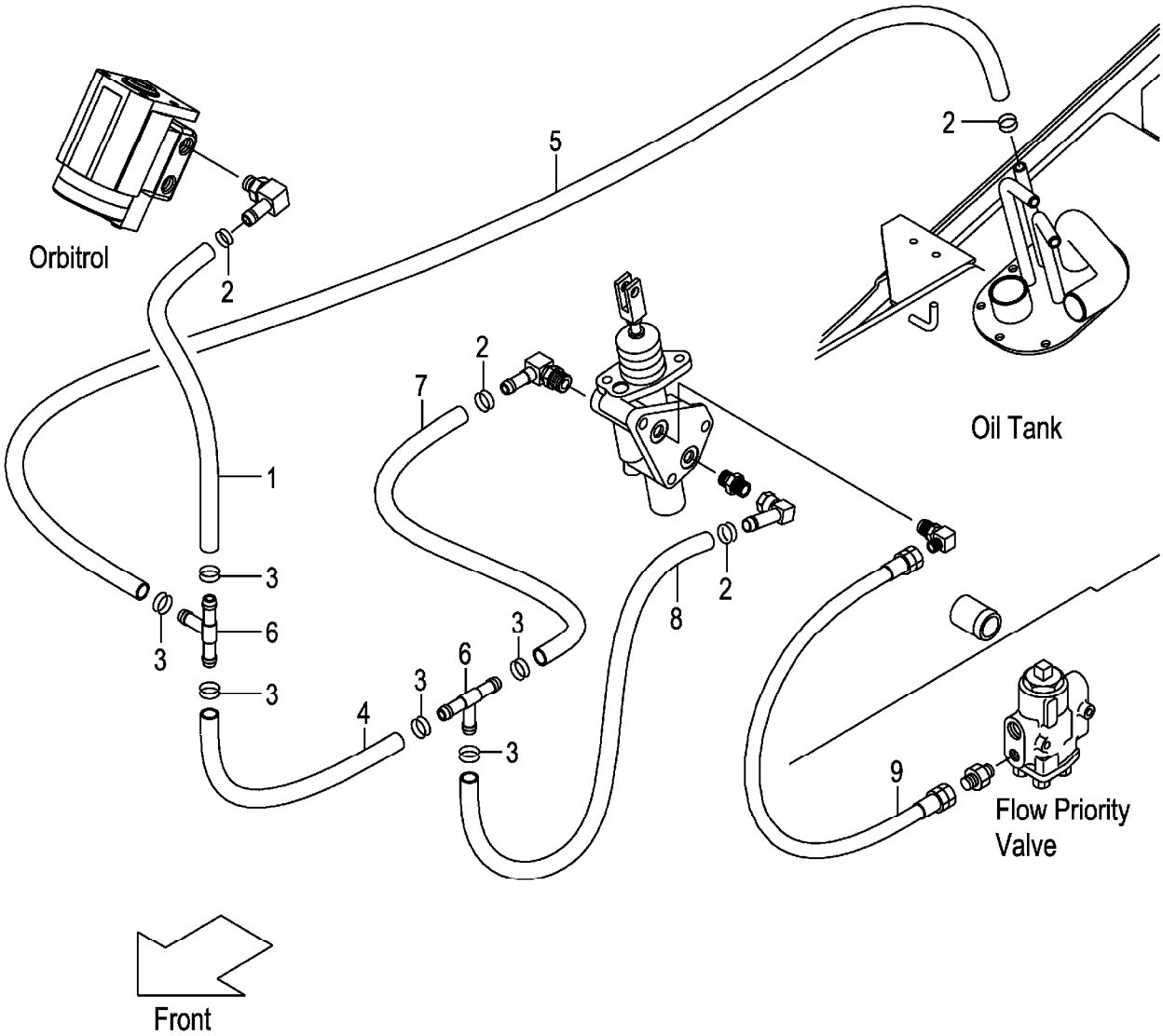

A:FG20W3 FG25W3
B:FD20W3 FD25W3

| Item No | Part No. | Mark | Description | | Req'd | Remarks : Serial No. |
|---|---|---|---|---|---|---|
| 1 | 04710-04045 | | HOSE | ﾎｰｽ | 1 | |
| 2 | 04911-00021 | | CLIP | ｸﾘｯﾌﾟ | 4 | |
| 3 | 229G7-82051 | | CLIP | ｸﾘｯﾌﾟ | 6 | |
| 4 | 04710-04060 | | HOSE | ﾎｰｽ | 1 | |
| 5 | 04710-04145 | | HOSE | ﾎｰｽ | 1 | |
| 6 | 53675-55051 | | THREE-WAY | ｽﾘｰｳｴｲ | 2 | |
| 7 | 04710-04018 | | HOSE | ﾎｰｽ | 1 | |
| 8 | 04710-04015 | | HOSE | ﾎｰｽ | 1 | |
| 9 | 04691-02100 | | HOSE | ﾎｰｽ | 1 | |

# FIG.187 HYDRAULIC LINE (MAIN)(4/4)

(F7027690) ﾊｲﾄﾞﾛﾘｯｸﾗｲﾝ(ﾒｲﾝ)(4/4)

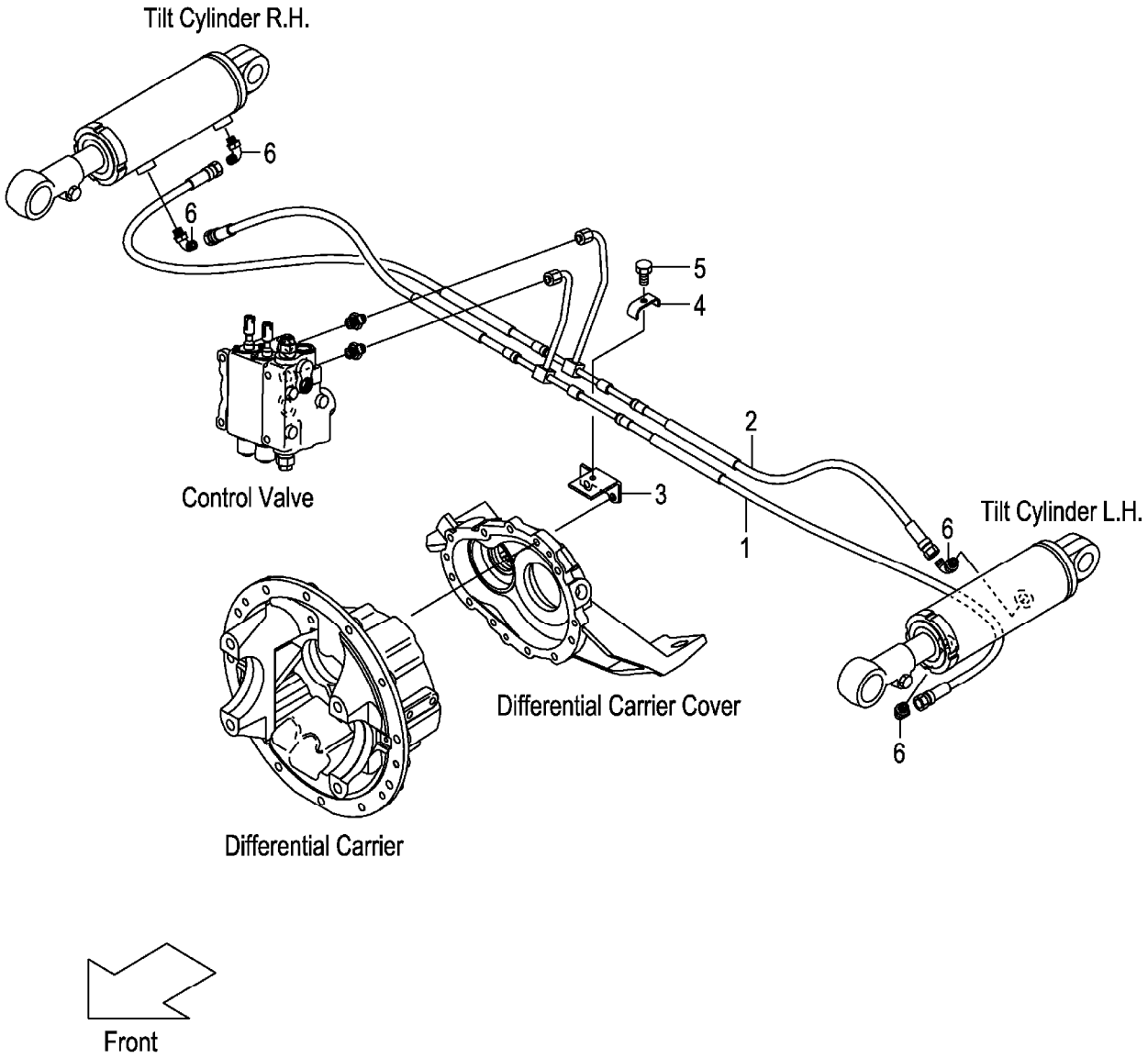

A:FG20C13 FG20T13 FG25C13 FG25T13 C:FD20C13 FD20T13 FD25C13 FD25T13 (F7027690)
B:FG20C3 FG20T3 FG25C3 FG25T3 FG20W3 FG25W3 D:FD20C3 FD20T3 FD25C3 FD25T3 FD20W3 FD25W3

| Item No | Part No. | Mark | Description | | Req'd | Remarks : Serial No. |
|---|---|---|---|---|---|---|
| 1 | 22N57-62401 | | HOSE,TILT,FRONT | ﾎｰｽ | 1 | |
| 2 | 22N57-62451 | | HOSE,TILT,REAR | ﾎｰｽ | 1 | |
| 3 | 22N57-62531 | | BRACKET,TILT-PIPE | ﾌﾞﾗｹｯﾄ | 1 | |
| 4 | 281E7-62041 | | CLIP,HOSE | ｸﾘｯﾌﾟ | 1 | |
| 5 | 01183-08025 | | BOLT | ﾎﾞﾙﾄ | 1 | |
| 6 | 22N57-62221 | | ELBOW | ｴﾙﾎﾞ | 4 | |

# FIG.188 HYDRAULIC LINE (TOR-CON)

(F70276A0) ﾊｲﾄﾞﾛﾘｯｸﾗｲﾝ(ﾄﾙｺﾝ)

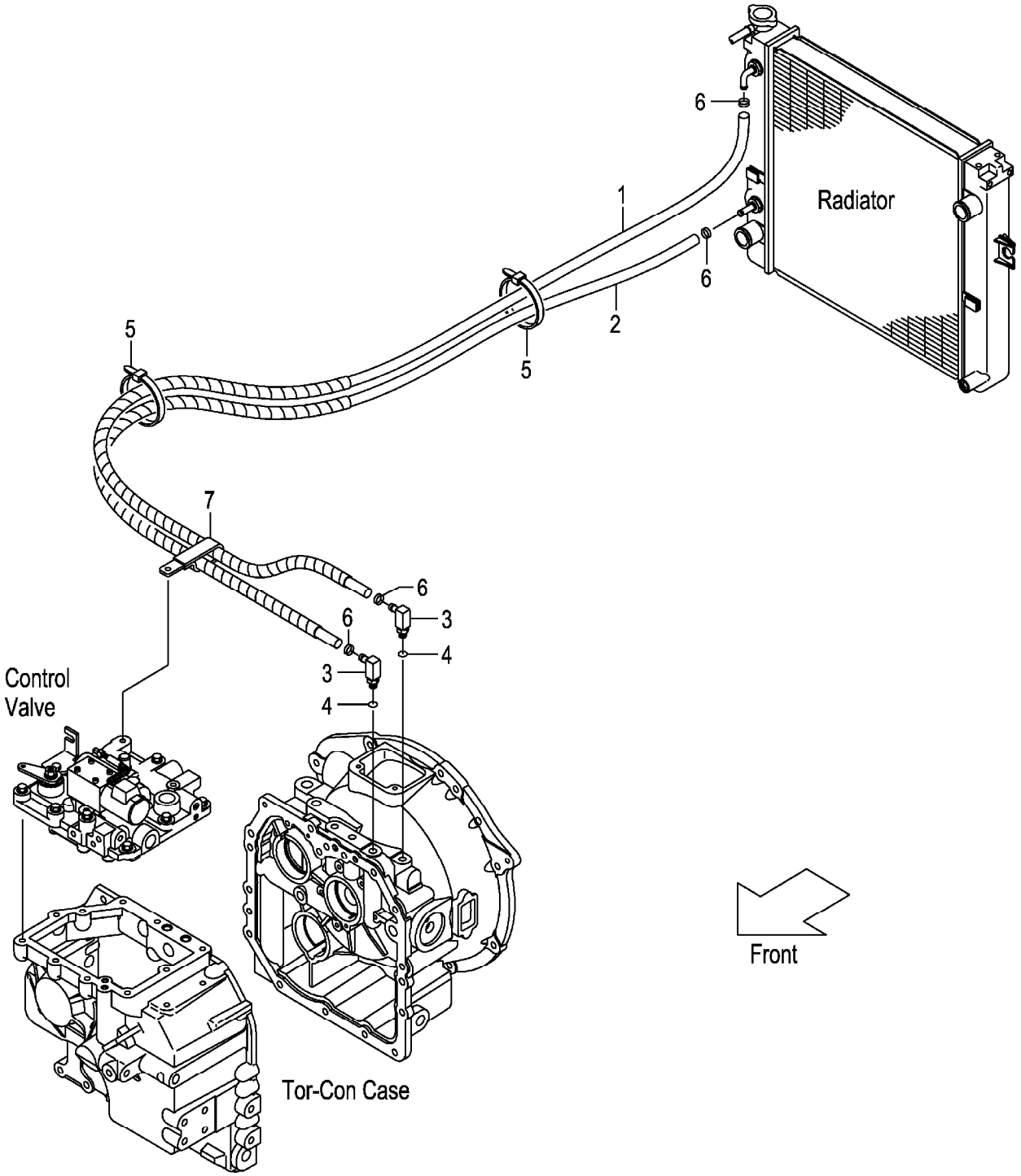

A:FG20T13 FG25T13 C:FD20T13 FD25T13
B:FG20T3 FG25T3 D:FD20T3 FD25T3

| Item No | Part No. | Mark | Description | | Req'd | Remarks : Serial No. |
|---|---|---|---|---|---|---|
| 1 | 22N57-82001 | | HOSE,OIL-COOLER | ﾎｰｽ | 1 | A,C:1-110<br>B:1-121<br>D:1-180 |
| - | 22N57-82111 | | HOSE,OIL-COOLER | ﾎｰｽ | 1 | A,C:111-<br>B:122-<br>D:181- |
| 2 | 216H7-82111 | | HOSE,OIL-COOLER | ﾎｰｽ | 1 | A,C:1-110<br>B:1-121<br>D:1-180 |
| - | 22N57-82101 | | HOSE,OIL-COOLER | ﾎｰｽ | 1 | A,C:111-<br>B:122-<br>D:181- |
| A1 | 22N57-80201 | | FITTING-ASSY,HOSE | ﾎｰｽﾌｨｯﾃｨﾝｸﾞｱｯｾﾝ | 2 | INC.3,4 |
| 3 | NO PART NO. | # | FITTING,HOSE | ﾌｨｯﾃｨﾝｸﾞ | 2 | |
| 4 | 03320-00140 | | O-RING | Oﾘﾝｸﾞ | 2 | |
| 5 | 27042-42322 | | BAND | ﾊﾞﾝﾄﾞ | 2 | |
| 6 | 04911-00023 | | CLIP | ｸﾘｯﾌﾟ | 4 | |
| 7 | 209P7-62531 | | CLIP,HOSE | ｸﾘｯﾌﾟ | 4 | A,C:111-<br>B:122-<br>D:181- |

# FIG.189 HYDRAULIC LINE (OIL CLUTCH)

(F70276B0) ﾊｲﾄﾞﾛﾘｯｸﾗｲﾝ(ｵｲﾙｸﾗｯﾁ)

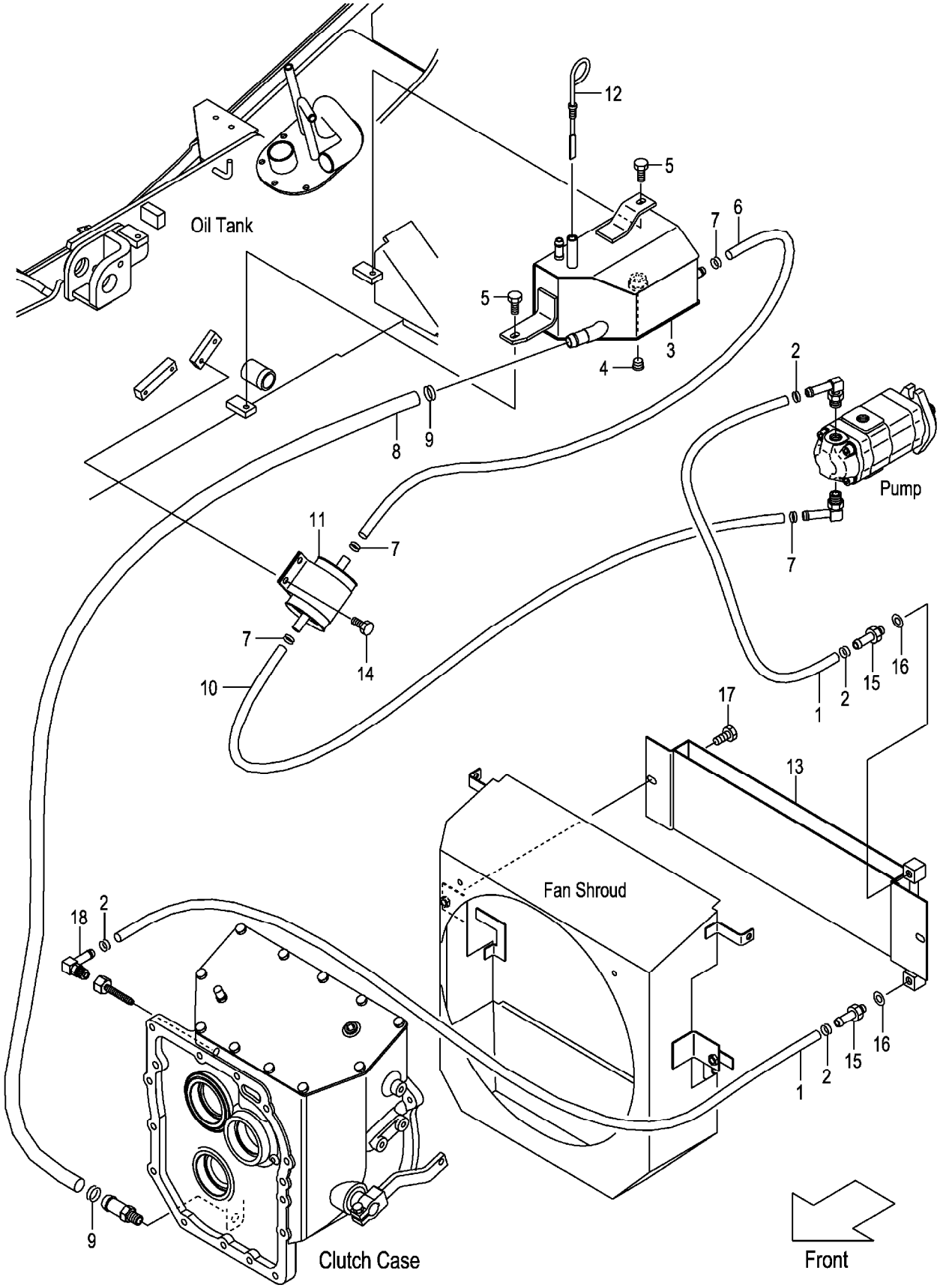

A:FG20W3 FG25W3
B:FD20W3 FD25W3

| Item No | Part No. | Mark | Description | | Req'd | Remarks : Serial No. |
|---|---|---|---|---|---|---|
| 1 | 229G7-82001 | | HOSE | ﾎｰｽ | 2 | |
| 2 | 229G7-82051 | | CLIP,HOSE | ｸﾘｯﾌﾟ | 4 | |
| 3 | 22P47-60101 | | TANK,OIL | ﾀﾝｸ | 1 | |
| 4 | 04000-00300 | | PLUG | ﾌﾟﾗｸﾞ | 1 | |
| 5 | 01183-08020 | | BOLT | ﾎﾞﾙﾄ | 2 | |
| 6 | 04710-04080 | | HOSE | ﾎｰｽ | 1 | |
| 7 | 04911-00021 | | CLIP | ｸﾘｯﾌﾟ | 4 | |
| 8 | 04710-06035 | | HOSE | ﾎｰｽ | 1 | |
| 9 | 04911-00032 | | CLIP | ｸﾘｯﾌﾟ | 2 | |
| 10 | 04710-04090 | | HOSE | ﾎｰｽ | 1 | |
| 11 | 234H7-62171 | | FILTER | ﾌｨﾙﾀ | 1 | |
| 12 | 27717-52081 | | GAUGE,OIL-LEVEL | ｹﾞｰｼﾞ | 1 | |
| 13 | 217W2-10001 | | COOLER,OIL | ｸｰﾗ | 1 | |
| 14 | 01185-08016 | | BOLT | ﾎﾞﾙﾄ | 2 | |
| 15 | 229G7-82101 | | NIPPLE | ﾆｯﾌﾟﾙ | 2 | |
| 16 | 23467-82041 | | PACKING | ﾊﾟｯｷﾝｸﾞ | 2 | |
| 17 | 01186-10016 | | BOLT | ﾎﾞﾙﾄ | 2 | |
| 18 | 22P47-60111 | | ELBOW | ｴﾙﾎﾞ | 1 | |

# FIG.190 TILT CYLINDER

(F7028510) ﾃｨﾙﾄｼﾘﾝﾀﾞ

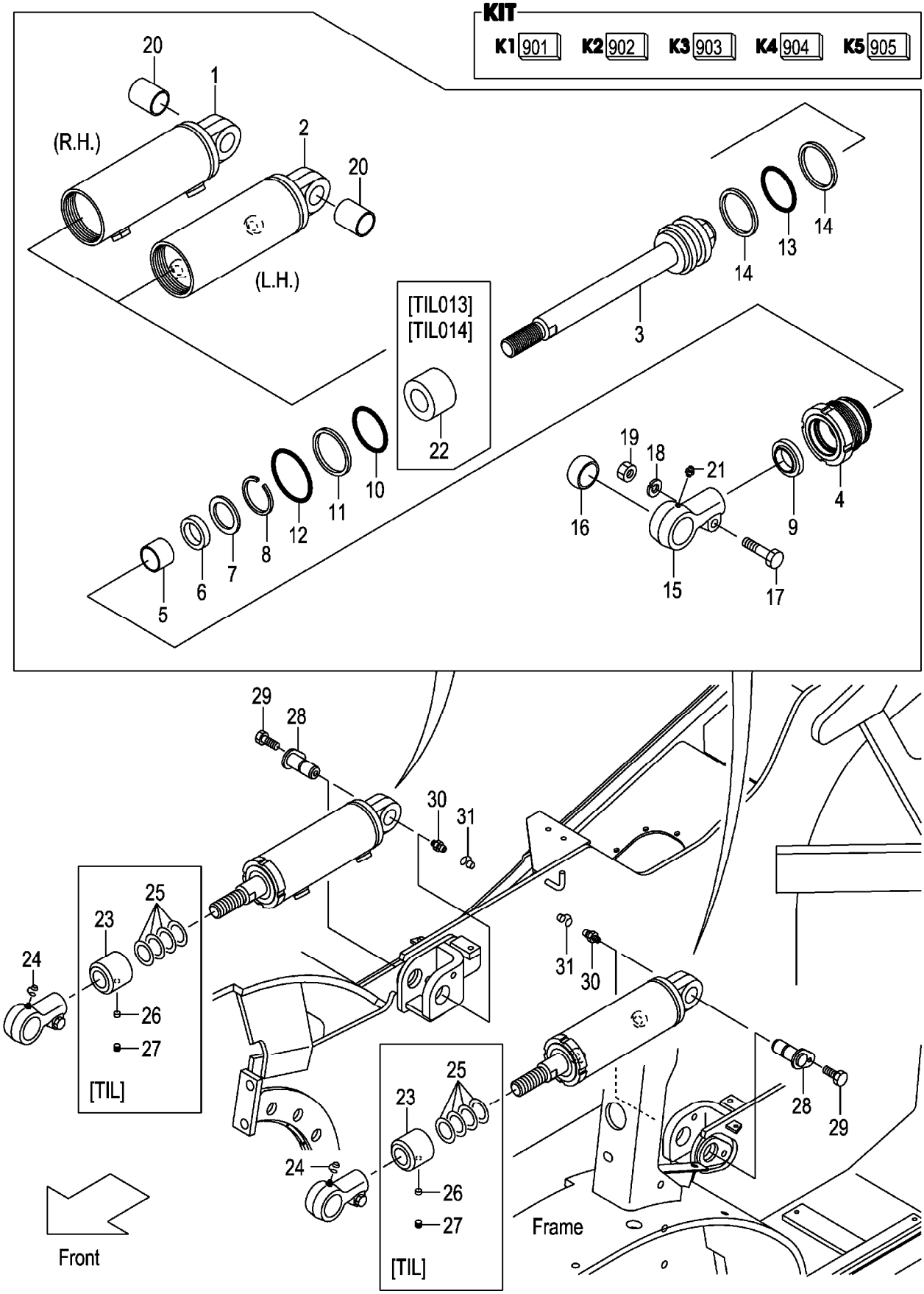

A:FG20C13 FG20T13 FG25C13 FG25T13 C:FD20C13 FD20T13 FD25C13 FD25T13 (F7028510)
B:FG20C3 FG20T3 FG25C3 FG25T3 FG20W3 FG25W3 D:FD20C3 FD20T3 FD25C3 FD25T3 FD20W3 FD25W3

| Item No | Part No. | Mark | Description | | Req'd | Remarks : Serial No. |
|---|---|---|---|---|---|---|
| A1 | 22N58-50101 | | CYL-ASSY,TILT,RH | ﾃｨﾙﾄｼﾘﾝﾀﾞｱｯｾﾝ | 1 | (6-12 DEG.) INC.1,3-21 |
| - | 22N58-50131 | | CYL-ASSY,TILT,RH | ﾃｨﾙﾄｼﾘﾝﾀﾞｱｯｾﾝ | 1 | [TIL013](3-3 DEG.) INC.1,3-23 |
| - | 22N58-50121 | | CYL-ASSY,TILT,RH | ﾃｨﾙﾄｼﾘﾝﾀﾞｱｯｾﾝ | 1 | [TIL014](3-6 DEG.) INC.1,3-23 |
| - | 22N58-50111 | | CYL-ASSY,TILT,RH | ﾃｨﾙﾄｼﾘﾝﾀﾞｱｯｾﾝ | 1 | [TIL016](6-6 DEG.) INC.1,3-21,23 |
| - | 22N58-50141 | | CYL-ASSY,TILT,RH | ﾃｨﾙﾄｼﾘﾝﾀﾞｱｯｾﾝ | 1 | [TIL017](6-10 DEG.) INC.1,3-21,23 |
| A2 | 22N58-50201 | | CYL-ASSY,TILT,LH | ﾃｨﾙﾄｼﾘﾝﾀﾞｱｯｾﾝ | 1 | (6-12 DEG.) INC.2-21 |
| - | 22N58-50231 | | CYL-ASSY,TILT,LH | ﾃｨﾙﾄｼﾘﾝﾀﾞｱｯｾﾝ | 1 | [TIL013](3-3 DEG.) INC.2-23 |
| - | 22N58-50221 | | CYL-ASSY,TILT,LH | ﾃｨﾙﾄｼﾘﾝﾀﾞｱｯｾﾝ | 1 | [TIL014](3-6 DEG.) INC.2-23 |
| - | 22N58-50211 | | CYL-ASSY,TILT,LH | ﾃｨﾙﾄｼﾘﾝﾀﾞｱｯｾﾝ | 1 | [TIL016](6-6 DEG.) INC.2-21,23 |
| - | 22N58-50241 | | CYL-ASSY,TILT,LH | ﾃｨﾙﾄｼﾘﾝﾀﾞｱｯｾﾝ | 1 | [TIL017](6-10 DEG.) INC.2-21,23 |
| 901 | 22N58-52921 | K1 | KIT,REPAIR,CYL | ﾘﾍﾟｱｷｯﾄ | 2 | INC.6,9-14 |
| 902 | 22N58-52901 | K2 | KIT,CYL-TUBE,RH | ｼﾘﾝﾀﾞﾁｭｰﾌﾞｷｯﾄ | 1 | INC.1,20 |
| 903 | 22N58-52911 | K3 | KIT,CYL-TUBE,LH | ｼﾘﾝﾀﾞﾁｭｰﾌﾞｷｯﾄ | 1 | INC.2,20 |
| 904 | 22N58-52931 | K4 | KIT,ROD-HEAD | ﾛｯﾄﾞﾍｯﾄﾞｷｯﾄ | 2 | INC.15,16 |
| 905 | 22N58-52941 | K5 | KIT,CYL-HEAD | ｼﾘﾝﾀﾞﾍｯﾄﾞｷｯﾄ | 2 | INC.4,5 |
| 1 | NO PART NO. | #* | TUBE,CYL,RH | ﾁｭｰﾌﾞ | 1 | |
| 2 | NO PART NO. | #* | TUBE,CYL,LH | ﾁｭｰﾌﾞ | 1 | |
| 3 | 22N58-52801 | | ROD,PISTON | ﾛｯﾄﾞ | 2 | |
| 4 | NO PART NO. | #* | HEAD,CYL | ﾍｯﾄﾞ | 2 | |
| 5 | NO PART NO. | #* | BUSHING | ﾌﾞｯｼﾝｸﾞ | 2 | |
| 6 | NO PART NO. | #* | U-RING | Uﾘﾝｸﾞ | 2 | |
| 7 | 22N58-52811 | | SPACER | ｽﾍﾟｰｻ | 2 | |
| 8 | 22N58-52821 | | RING,SNAP | ｽﾅｯﾌﾟﾘﾝｸﾞ | 2 | |
| 9 | NO PART NO. | #* | RING,WIPER | ﾘﾝｸﾞ | 2 | |
| 10 | NO PART NO. | #* | O-RING | Oﾘﾝｸﾞ | 2 | |
| 11 | NO PART NO. | #* | RING,BACK-UP | ﾘﾝｸﾞ | 2 | |
| 12 | NO PART NO. | #* | O-RING | Oﾘﾝｸﾞ | 2 | |
| 13 | NO PART NO. | #* | O-RING | Oﾘﾝｸﾞ | 2 | |
| 14 | NO PART NO. | #* | RING,BACK-UP | ﾘﾝｸﾞ | 4 | |
| 15 | NO PART NO. | #* | HEAD,ROD | ﾍｯﾄﾞ | 2 | |
| 16 | NO PART NO. | #* | BUSHING,PIN | ﾌﾞｯｼﾝｸﾞ | 2 | |
| 17 | 22N58-52831 | | BOLT | ﾎﾞﾙﾄ | 2 | |
| 18 | 22N58-52841 | | WASHER | ﾜｯｼｬ | 2 | |
| 19 | 22N58-52851 | | NUT | ﾅｯﾄ | 2 | |
| 20 | NO PART NO. | #* | BUSHING,PIN | ﾌﾞｯｼﾝｸﾞ | 2 | |
| 21 | 22N58-52861 | | NIPPLE,GREASE | ﾆｯﾌﾟﾙ | 2 | |
| 22 | 22N58-52871 | | SPACER | ｽﾍﾟｰｻ | 2 | [TIL013][TIL014] (3-3,3-6 DEG.) |
| 23 | 22N58-52111 | | SPACER | ｽﾍﾟｰｻ | 2 | [TIL013](3-3 DEG.) |
| - | 22N58-52101 | | SPACER | ｽﾍﾟｰｻ | 2 | [TIL014][TIL016] (3-6,6-6 DEG.) |
| - | 22N58-52121 | | SPACER | ｽﾍﾟｰｻ | 2 | [TIL017](6-10 DEG.) |
| 24 | 22199-12401 | | CAP,NIPPLE | ｷｬｯﾌﾟ | 2 | |
| 25 | 23658-52101 | | SHIM | ｼﾑ | 8 | [TIL013][TIL014] (3-3,3-6 DEG.) |
| - | 23658-52101 | | SHIM | ｼﾑ | 8 | [TIL016][TIL017] (6-6,6-10 DEG.) |

# FIG.190 TILT CYLINDER

(F7028510) ﾃｨﾙﾄｼﾘﾝﾀﾞ

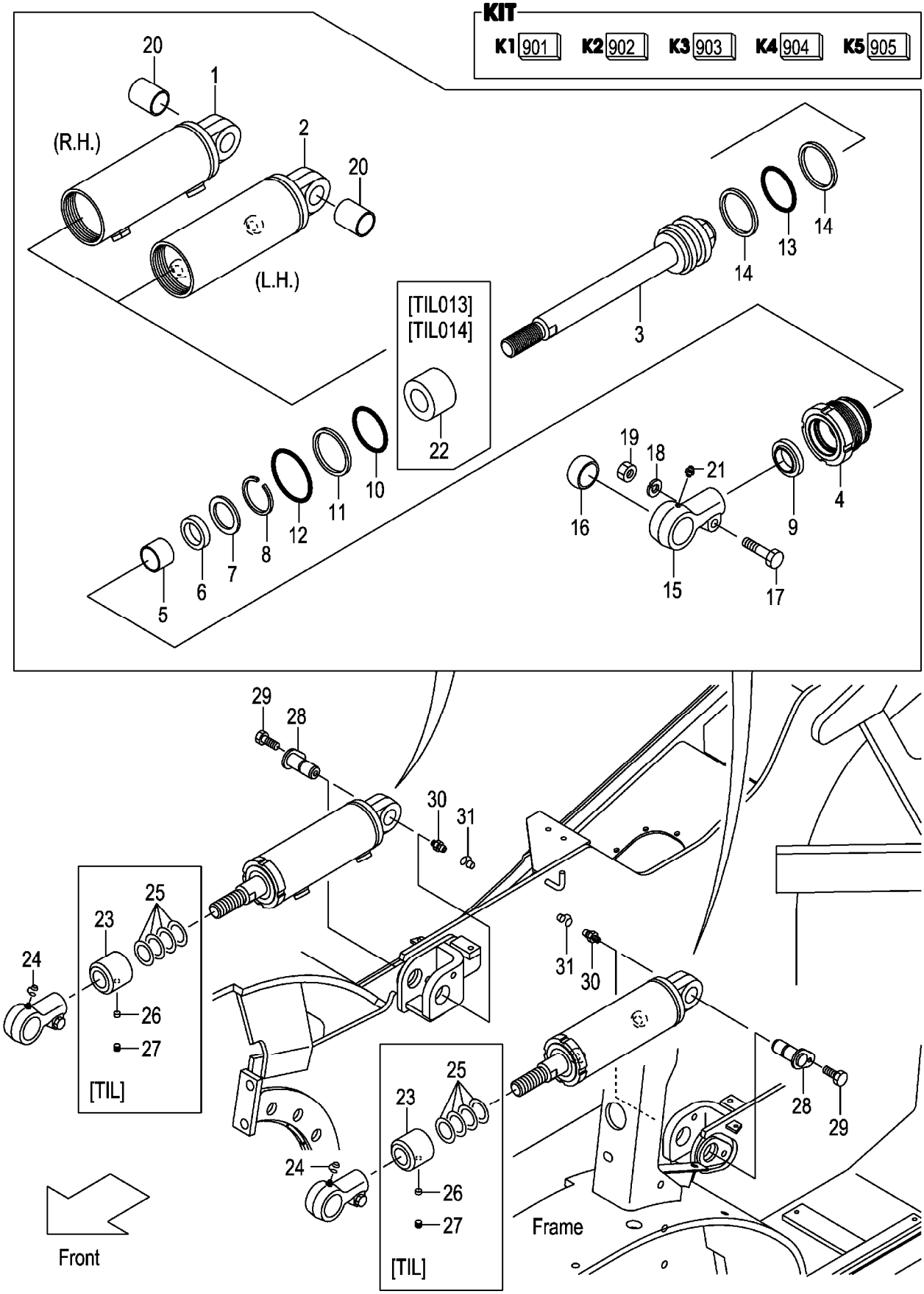

A:FG20C13 FG20T13 FG25C13 FG25T13 C:FD20C13 FD20T13 FD25C13 FD25T13 (F7028510)
B:FG20C3 FG20T3 FG25C3 FG25T3 FG20W3 FG25W3 D:FD20C3 FD20T3 FD25C3 FD25T3 FD20W3 FD25W3

| Item No | Part No. | Mark | Description | | Req'd | Remarks : Serial No. |
|---|---|---|---|---|---|---|
| 26 | 01066-10012 | | SCREW,SET | ｽｸﾘｭ | 2 | [TIL013][TIL014] (3-3,3-6 DEG.) |
| - | 01066-10012 | | SCREW,SET | ｽｸﾘｭ | 2 | [TIL016][TIL017] (6-6,6-10 DEG.) |
| 27 | 23658-52401 | | PLUG,NYLON | ﾌﾟﾗｸﾞ | 2 | [TIL013][TIL014] (3-3,3-6 DEG.) |
| - | 23658-52401 | | PLUG,NYLON | ﾌﾟﾗｸﾞ | 2 | [TIL016][TIL017] (6-6,6-10 DEG.) |
| 28 | 22N58-52301 | | PIN | ﾋﾟﾝ | 2 | |
| 29 | 01186-10016 | | BOLT | ﾎﾞﾙﾄ | 2 | |
| 30 | 04901-00100 | | FITTING | ﾌｨｯﾃｨﾝｸﾞ | 2 | |
| 31 | 22199-12401 | | CAP,NIPPLE | ｷｬｯﾌﾟ | 2 | |

# M E M O

# M E M O

# FIG.191 TILT CYLINDER BOOT [TLB][FC]

(F7028520) ﾃｨﾙﾄｼﾘﾝﾀﾞﾌﾞｰﾂ

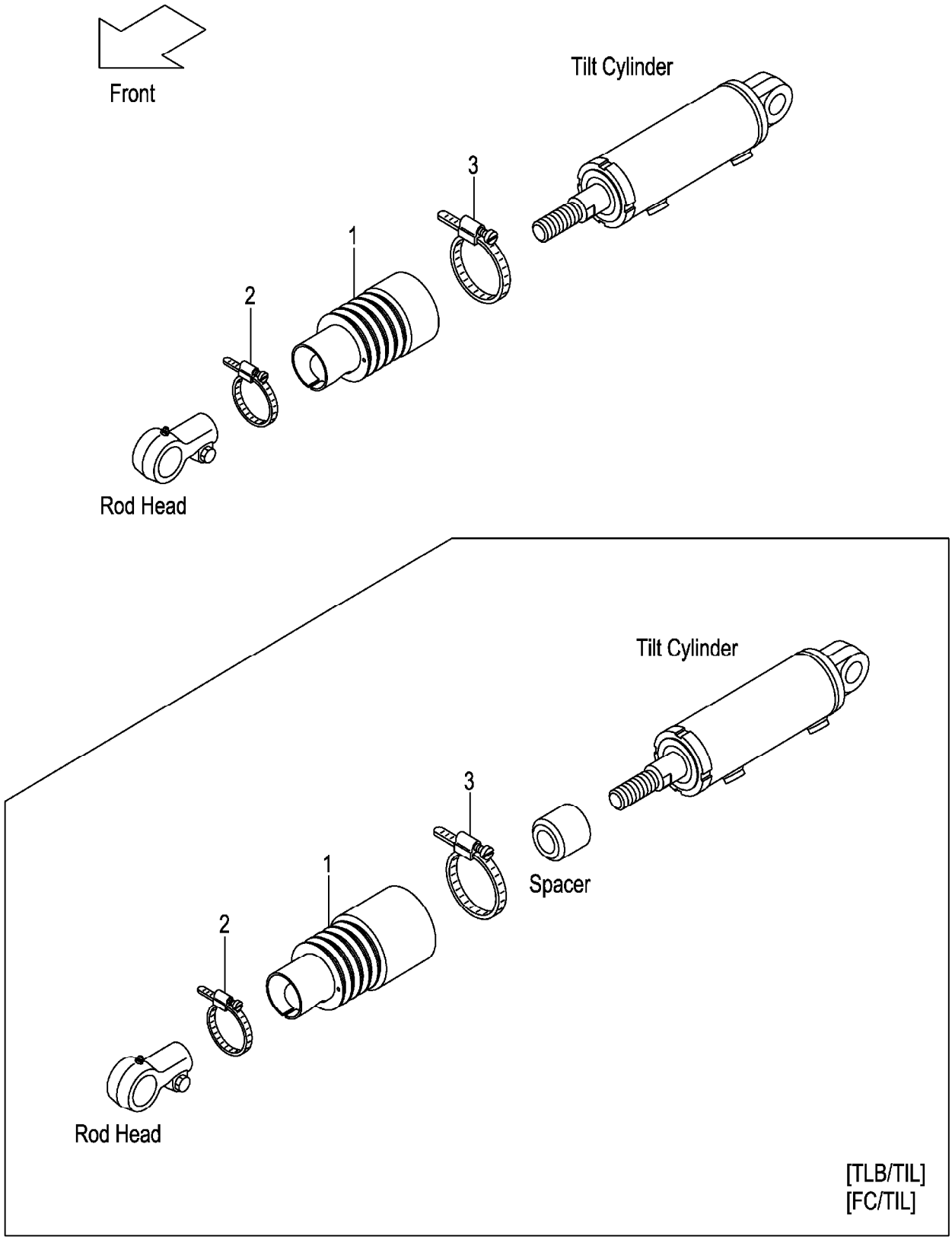

A:FG20C13 FG20T13 FG25C13 FG25T13 C:FD20C13 FD20T13 FD25C13 FD25T13 (F7028520)
B:FG20C3 FG20T3 FG25C3 FG25T3 FG20W3 FG25W3 D:FD20C3 FD20T3 FD25C3 FD25T3 FD20W3 FD25W3

| Item No | Part No. | Mark | Description | | Req'd | Remarks : Serial No. |
|---|---|---|---|---|---|---|
| A1 | 22N58-50301 | | BOOT-ASSY,TILT-CYL | ﾃｨﾙﾄｼﾘﾝﾀﾞﾌﾞｰﾂｱｯｾﾝ | 2 | [TLB][FC](6-12 DEG.) INC.1-3 |
| - | 22N58-50311 | | BOOT-ASSY,TILT-CYL | ﾃｨﾙﾄｼﾘﾝﾀﾞﾌﾞｰﾂｱｯｾﾝ | 2 | [TLB/TIL013&014] (3-3,3-6 DEG.) INC.1-3 |
| - | 22N58-50311 | | BOOT-ASSY,TILT-CYL | ﾃｨﾙﾄｼﾘﾝﾀﾞﾌﾞｰﾂｱｯｾﾝ | 2 | [TLB/TIL016&017] (6-6,6-10 DEG.) INC.1-3 |
| - | 22N58-50311 | | BOOT-ASSY,TILT-CYL | ﾃｨﾙﾄｼﾘﾝﾀﾞﾌﾞｰﾂｱｯｾﾝ | 2 | [FC/TIL013&014](3-3,3-6 DEG.) INC.1-3 |
| - | 22N58-50311 | | BOOT-ASSY,TILT-CYL | ﾃｨﾙﾄｼﾘﾝﾀﾞﾌﾞｰﾂｱｯｾﾝ | 2 | [FC/TIL016&017] (6-6,6-10 DEG.) INC.1-3 |
| 1 | 22N58-53001 | | BOOT,TILT-CYL | ﾌﾞｰﾂ | 2 | [TLB][FC](6-12 DEG.) |
| - | 22N58-53101 | | BOOT,TILT-CYL | ﾌﾞｰﾂ | 2 | [TLB/TIL013&014] [FC/TIL013&014](3-3,3-6 DEG.) |
| - | 22N58-53101 | | BOOT,TILT-CYL | ﾌﾞｰﾂ | 2 | [TLB/TIL016&017] [FC/TIL016&017] (6-6,6-10 DEG.) |
| 2 | 216G8-53001 | | BAND,50 | ﾊﾞﾝﾄﾞ | 2 | [TLB][FC] |
| - | 216G8-53011 | | BAND,55 | ﾊﾞﾝﾄﾞ | (2) | [TLB][FC] |
| 3 | 224T8-53021 | | BAND,115 | ﾊﾞﾝﾄﾞ | 2 | [TLB][FC] |

# FIG.192 DECAL (1/2)

(F7029110) ﾃﾞｶﾙ(1/2)

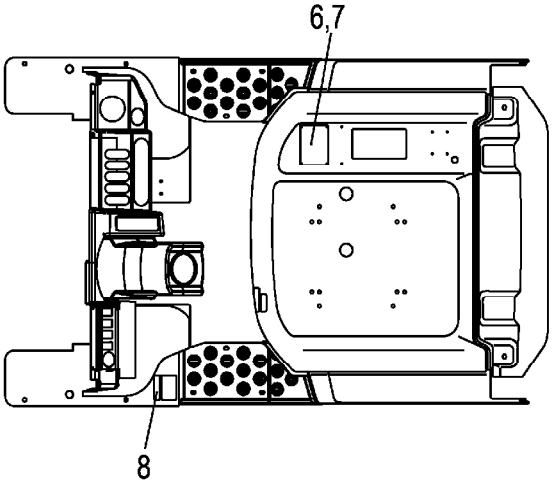


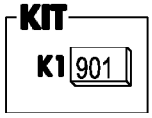


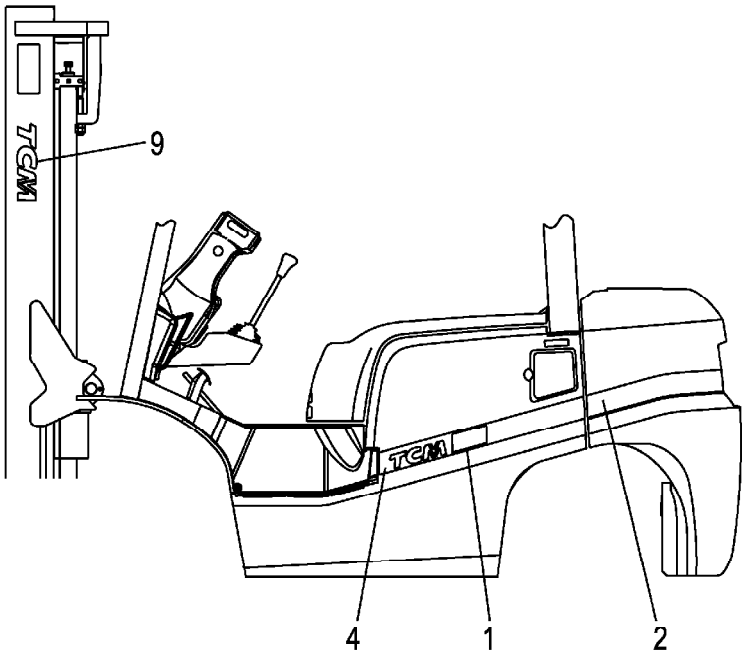


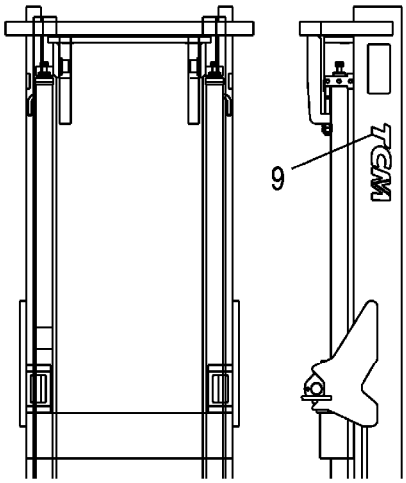


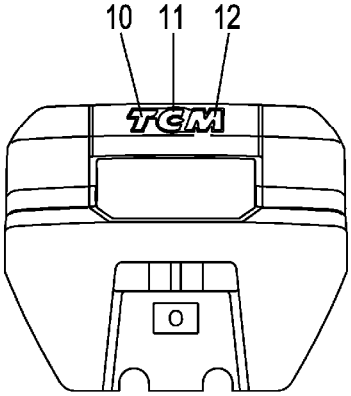


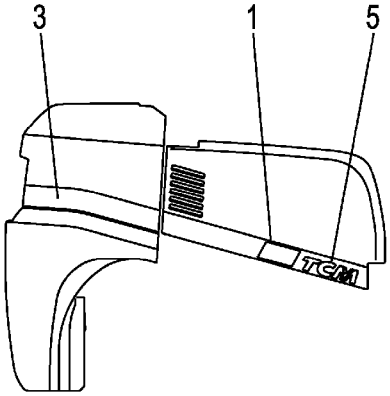

A:FG20C13 FG20T13 D:FG25C3 FG25T3 G:FD20C13 FD20T13 K:FD25C3 FD25T3
B:FG25C13 FG25T13 E:FG20W3 H:FD25C13 FD25T13 L:FD20W3
C:FG20C3 FG20T3 F:FG25W3 J:FD20C3 FD20T3 M:FD25W3

**FIG.192**
(F7029110)

| Item No | Part No. | Mark | Description | Req'd | Remarks : Serial No. |
|---|---|---|---|---|---|
| 901 | C-11452-2B5-D | K1 | KIT,DECAL,JPN デカルキット | 1 | A,B,C,D,E,F<br>INC.8,9,FIG.193:3-15 |
| - | C-11452-2N5-D | K1 | KIT,DECAL,JPN デカルキット | 1 | G,H,J,K,L,M<br>INC.8,9,FIG.193:3-15 |
| - | C-11452-2B0-E | K1 | KIT,DECAL,ENGLISH デカルキット | 1 | C,D<br>[EXB/ENGLISH]<br>INC.8,9,FIG.194:3-11,16-23 |
| - | C-11452-2N0-E | K1 | KIT,DECAL,ENGLISH デカルキット | 1 | J,K<br>[EXB/ENGLISH]<br>INC.8,9,FIG.194:3-11,16-23 |
| - | C-11452-2B0-S | K1 | KIT,DECAL,SPANISH デカルキット | 1 | C,D<br>[EXB/SPANISH]<br>INC.8,9,FIG.194:3-11,15-23 |
| - | C-11452-2N0-S | K1 | KIT,DECAL,SPANISH デカルキット | 1 | J,K<br>[EXB/SPANISH]<br>INC.8,9,FIG.194:3-11,15-23 |
| - | C-11452-2B0-BF | K1 | KIT,DECAL,FRENCH デカルキット | 1 | C,D<br>[EXB/FRENCH]<br>INC.8,9,FIG.194:3-11,15-23 |
| - | C-11452-2N0-BF | K1 | KIT,DECAL,FRENCH デカルキット | 1 | J,K<br>[EXB/FRENCH]<br>INC.8,9,FIG.194:3-11,15-23 |
| - | C-11452-2B0-C | K1 | KIT,DECAL,CHINESE デカルキット | 1 | C,D<br>[EXB/CHINESE]<br>INC.8,9,FIG.194:3-12,<br>15-21,23 |
| - | C-11452-2N0-C | K1 | KIT,DECAL,CHINESE デカルキット | 1 | J,K<br>[EXB/CHINESE]<br>INC.8,9,FIG.194:3-12,<br>15-21,23 |
| - | C-11452-2B0-R | K1 | KIT,DECAL,RUSSIAN デカルキット | 1 | C,D<br>[EXB/RUSSIAN]<br>INC.8,9,FIG.194:3-11,13-23 |
| - | C-11452-2N0-R | K1 | KIT,DECAL,RUSSIAN デカルキット | 1 | J,K<br>[EXB/RUSSIAN]<br>INC.8,9,FIG.194:3-11,13-23 |
| - | C-11452-2B0-E | K1 | KIT,DECAL,ENGLISH デカルキット | 1 | C,D<br>[EXC] INC.8,9,FIG.195:3-19 |
| - | C-11452-2N0-E | K1 | KIT,DECAL,ENGLISH デカルキット | 1 | J,K<br>[EXC] INC.8,9,FIG.195:3-19 |
| - | C-11452-2B0-E | K1 | KIT,DECAL,ENGLISH デカルキット | 1 | C,D<br>[EXE/ENGLISH]<br>INC.8,9,FIG.196:3-11,13-20 |
| - | C-11452-2N0-E | K1 | KIT,DECAL,ENGLISH デカルキット | 1 | J,K<br>[EXE/ENGLISH]<br>INC.8,9,FIG.196:3-11,13-20 |
| - | C-11452-2B0-S | K1 | KIT,DECAL,SPANISH デカルキット | 1 | C,D<br>[EXE/SPANISH]<br>INC.8,9,FIG.196:3-20 |

# FIG.192 DECAL (1/2)

(F7029110) ﾃﾞｶﾙ(1/2)

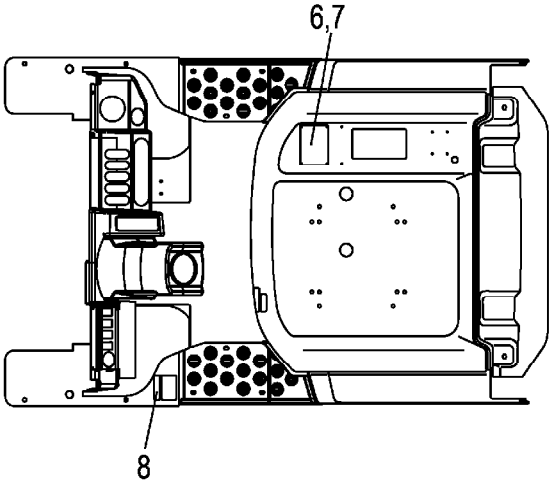


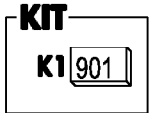


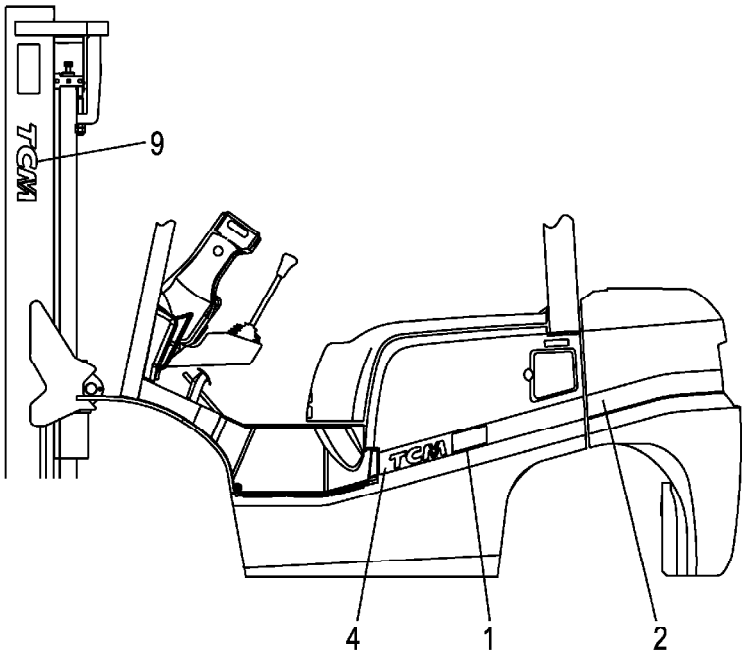


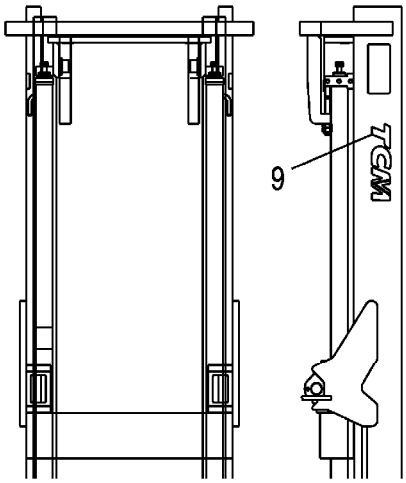


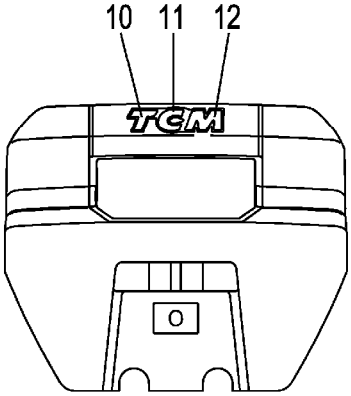


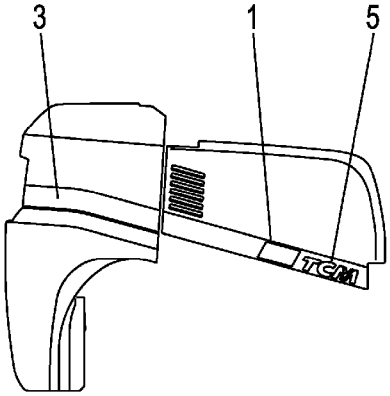

| Item No | Part No. | Mark | Description | Req'd | Remarks : Serial No. |
|---|---|---|---|---|---|
| - | C-11452-2N0-S | K1 | KIT,DECAL,SPANISH デカルキット | 1 | J,K<br>[EXE/SPANISH]<br>INC.8,9,FIG.196:3-20 |
| - | C-11452-2B0-BF | K1 | KIT,DECAL,FRENCH デカルキット | 1 | C,D<br>[EXE/FRENCH]<br>INC.8,9,FIG.196:3-20 |
| - | C-11452-2N0-BF | K1 | KIT,DECAL,FRENCH デカルキット | 1 | J,K<br>[EXE/FRENCH]<br>INC.8,9,FIG.196:3-20 |
| - | C-11452-2B0-G | K1 | KIT,DECAL,GERMAN デカルキット | 1 | C,D<br>[EXE/GERMAN]<br>INC.8,9,FIG.196:3-20 |
| - | C-11452-2N0-G | K1 | KIT,DECAL,GERMAN デカルキット | 1 | J,K<br>[EXE/GERMAN]<br>INC.8,9,FIG.196:3-20 |
| - | C-11452-2B0-O | K1 | KIT,DECAL,DUTCH デカルキット | 1 | C,D<br>[EXE/DUTCH]<br>INC.8,9,FIG.196:3-20 |
| - | C-11452-2N0-O | K1 | KIT,DECAL,DUTCH デカルキット | 1 | J,K<br>[EXE/DUTCH]<br>INC.8,9,FIG.196:3-20 |
| - | C-11452-2B0-DN | K1 | KIT,DECAL,DANISH デカルキット | 1 | C,D<br>[EXE/DANISH]<br>INC.8,9,FIG.196:3-20 |
| - | C-11452-2N0-DN | K1 | KIT,DECAL,DANISH デカルキット | 1 | J,K<br>[EXE/DANISH]<br>INC.8,9,FIG.196:3-20 |
| - | C-11452-2B0-I | K1 | KIT,DECAL,ITALIAN デカルキット | 1 | C,D<br>[EXE/ITALIAN]<br>INC.8,9,FIG.196:3-20 |
| - | C-11452-2N0-I | K1 | KIT,DECAL,ITALIAN デカルキット | 1 | J,K<br>[EXE/ITALIAN]<br>INC.8,9,FIG.196:3-20 |
| - | C-11452-2B0-GR | K1 | KIT,DECAL,GREEK デカルキット | 1 | C,D<br>[EXE/GREEK]<br>INC.8,9,FIG.196:3-20 |
| - | C-11452-2N0-GR | K1 | KIT,DECAL,GREEK デカルキット | 1 | J,K<br>[EXE/GREEK]<br>INC.8,9,FIG.196:3-20 |
| - | C-11452-2B0-P | K1 | KIT,DECAL,PORTUGUESE デカルキット | 1 | C,D<br>[EXE/PORTUGUESE]<br>INC.8,9,FIG.196:3-20 |
| - | C-11452-2N0-P | K1 | KIT,DECAL,PORTUGUESE デカルキット | 1 | J,K<br>[EXE/PORTUGUESE]<br>INC.8,9,FIG.196:3-20 |
| - | C-11452-2B0-NR | K1 | KIT,DECAL,NORWEGIAN デカルキット | 1 | C,D<br>[EXE/NORWEGIAN]<br>INC.8,9,FIG.196:3-20 |

# FIG.192 DECAL (1/2)

(F7029110) ﾃﾞｶﾙ(1/2)

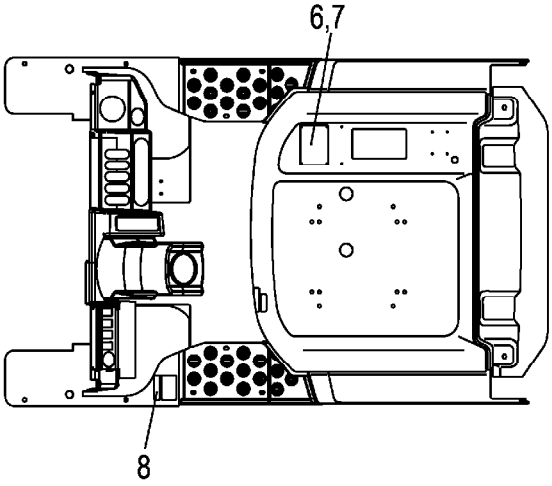


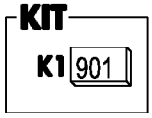


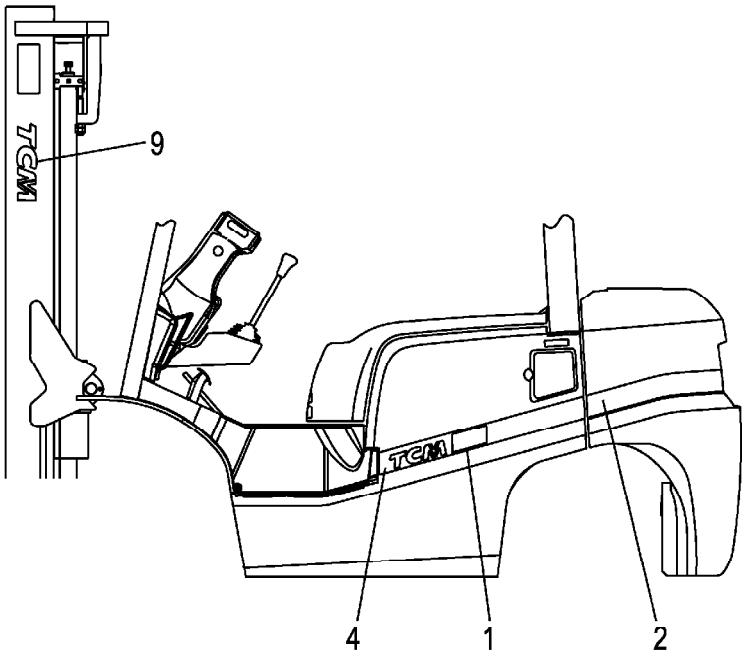


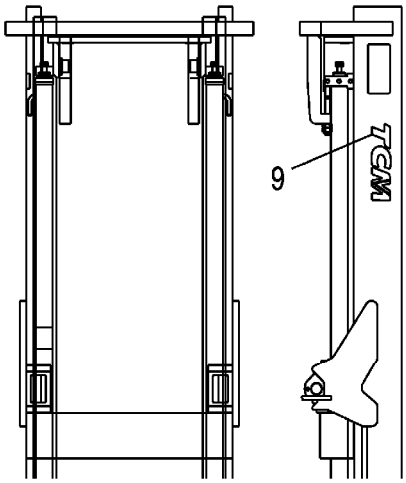


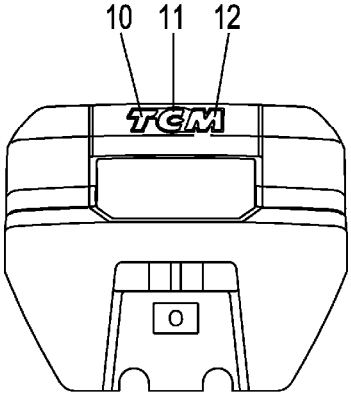


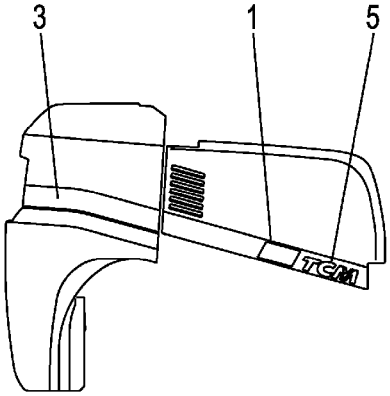

**FIG.192**
(F7029110)

| Item No | Part No. | Mark | Description | Req'd | Remarks : Serial No. |
|---|---|---|---|---|---|
| - | C-11452-2N0-NR | K1 | KIT,DECAL,NORWEGIAN デカルキット | 1 | J,K [EXE/NORWEGIAN] INC.8,9,FIG.196:3-20 |
| - | C-11452-2B0-PL | K1 | KIT,DECAL,POLISH デカルキット | 1 | C,D [EXE/POLISH] INC.8,9,FIG.196:3-20 |
| - | C-11452-2N0-PL | K1 | KIT,DECAL,POLISH デカルキット | 1 | J,K [EXE/POLISH] INC.8,9,FIG.196:3-20 |
| - | C-11452-2B0-H | K1 | KIT,DECAL,HUNGARIAN デカルキット | 1 | C,D [EXE/HUNGARIAN] INC.8,9,FIG.196:3-20 |
| - | C-11452-2N0-H | K1 | KIT,DECAL,HUNGARIAN デカルキット | 1 | J,K [EXE/HUNGARIAN] INC.8,9,FIG.196:3-20 |
| - | C-11452-2B0-CZ | K1 | KIT,DECAL,CZECH デカルキット | 1 | C,D [EXE/CZECH] INC.8,9,FIG.196:3-20 |
| - | C-11452-2N0-CZ | K1 | KIT,DECAL,CZECH デカルキット | 1 | J,K [EXE/CZECH] INC.8,9,FIG.196:3-20 |
| - | C-11452-2B0-TR | K1 | KIT,DECAL デカルキット | 1 | C,D [EXE/TURKISH] INC.8,9,FIG.196:3-20 |
| - | C-11452-2N0-TR | K1 | KIT,DECAL デカルキット | 1 | J,K [EXE/TURKISH] INC.8,9,FIG.196:3-20 |
| - | C-11452-2B0-E | K1 | KIT,DECAL,ENGLISH デカルキット | 1 | C,D [EXK] INC.8,9,FIG.197:3-19 |
| - | C-11452-2N0-E | K1 | KIT,DECAL,ENGLISH デカルキット | 1 | J,K [EXK] INC.8,9,FIG.197:3-19 |
| - | C-11452-2B0-E | K1 | KIT,DECAL,ENGLISH デカルキット | 1 | C,D [EXN/ENGLISH] INC.8,9,FIG.198:3-11,13-20 |
| - | C-11452-2N0-E | K1 | KIT,DECAL,ENGLISH デカルキット | 1 | J,K [EXN/ENGLISH] INC.8,9,FIG.198:3-11,13-20 |
| - | C-11452-2B0-DN | K1 | KIT,DECAL,DANISH デカルキット | 1 | C,D [EXN/DANISH] INC.8,9,FIG.198:3-20 |
| - | C-11452-2N0-DN | K1 | KIT,DECAL,DANISH デカルキット | 1 | J,K [EXN/DANISH] INC.8,9,FIG.198:3-20 |
| - | C-11452-2B0-SW | K1 | KIT,DECAL,SWEDISH デカルキット | 1 | C,D [EXN/SWEDISH] INC.8,9,FIG.198:3-20 |
| - | C-11452-2N0-SW | K1 | KIT,DECAL,SWEDISH デカルキット | 1 | J,K [EXN/SWEDISH] INC.8,9,FIG.198:3-20 |

# FIG.192 DECAL (1/2)

(F7029110) ﾃﾞｶﾙ(1/2)

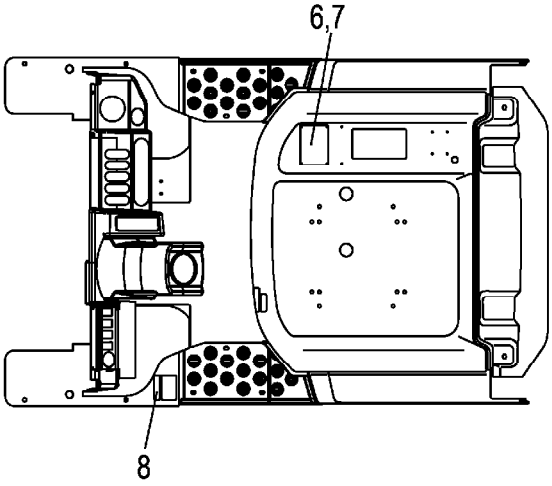


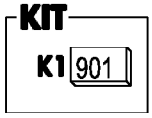


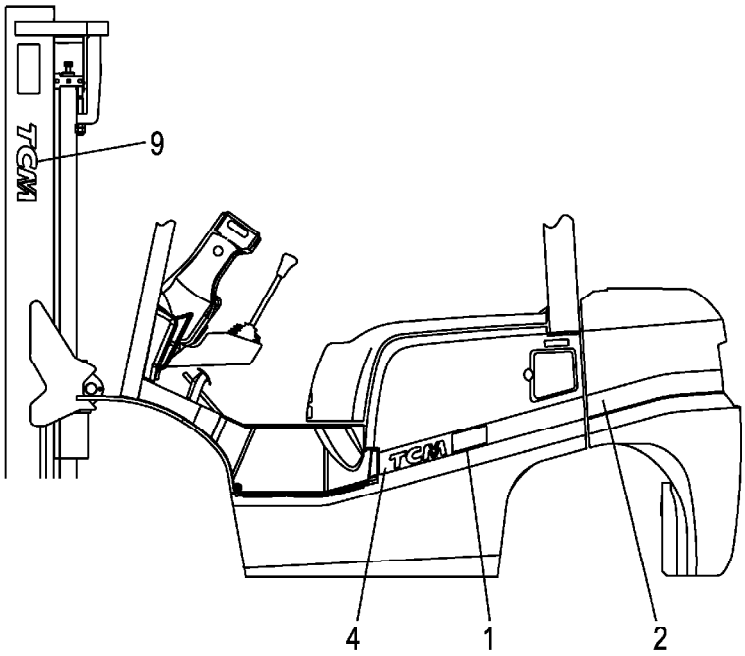


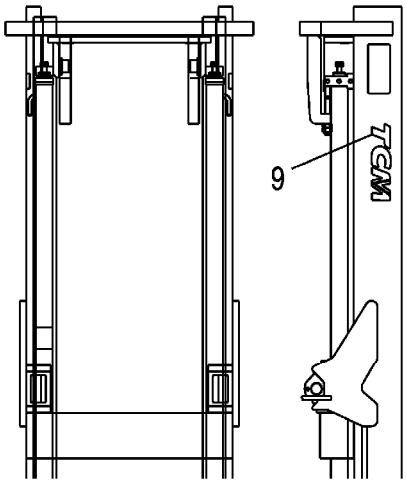


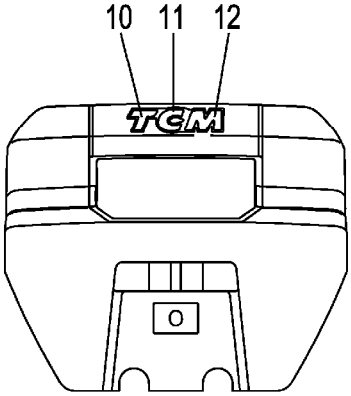


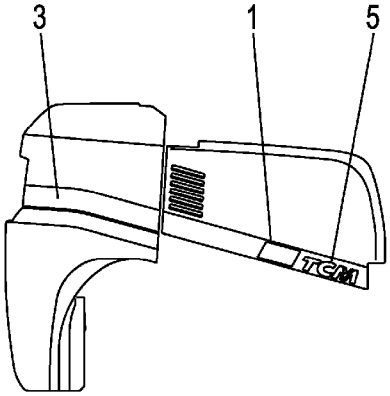

A:FG20C13 FG20T13 D:FG25C3 FG25T3 G:FD20C13 FD20T13 K:FD25C3 FD25T3
B:FG25C13 FG25T13 E:FG20W3 H:FD25C13 FD25T13 L:FD20W3
C:FG20C3 FG20T3 F:FG25W3 J:FD20C3 FD20T3 M:FD25W3

**FIG.192**
(F7029110)

| Item No | Part No. | Mark | Description | | Req'd | Remarks : Serial No. |
|---|---|---|---|---|---|---|
| - | C-11452-2B0-FI | K1 | KIT,DECAL,FINNISH | ﾃﾞｶﾙｷｯﾄ | 1 | C,D<br>[EXN/FINNISH]<br>INC.8,9,FIG.198:3-20 |
| - | C-11452-2N0-FI | K1 | KIT,DECAL,FINNISH | ﾃﾞｶﾙｷｯﾄ | 1 | J,K<br>[EXN/FINNISH]<br>INC.8,9,FIG.198:3-20 |
| 1 | 22N19-12281 | | DECAL,MODEL-MARK,20 | ﾃﾞｶﾙ | 2 | A,C,E,G,J,L |
| - | 22N59-12281 | | DECAL,MODEL-MARK,25 | ﾃﾞｶﾙ | 2 | B,D,F,H,K,M |
| 2 | 22N19-12151 | | LINE,WEIGHT,LH | ﾗｲﾝ | 1 | A,C,E,G,J,L |
| - | 22N19-12171 | | LINE,WEIGHT,LH | ﾗｲﾝ | 1 | A,C,E,G,J,L<br>[ATF] |
| - | 22N59-12151 | | LINE,WEIGHT,LH | ﾗｲﾝ | 1 | B,D,F,H,K,M |
| - | 22N59-12171 | | LINE,WEIGHT,LH | ﾗｲﾝ | 1 | B,D,F,H,K,M<br>[ATF] |
| 3 | 22N19-12161 | | LINE,WEIGHT,RH | ﾗｲﾝ | 1 | A,C,E,G,J,L |
| - | 22N19-12181 | | LINE,WEIGHT,RH | ﾗｲﾝ | 1 | A,C,E,G,J,L<br>[ATF] |
| - | 22N59-12161 | | LINE,WEIGHT,RH | ﾗｲﾝ | 1 | B,D,F,H,K,M |
| - | 22N59-12181 | | LINE,WEIGHT,RH | ﾗｲﾝ | 1 | B,D,F,H,K,M<br>[ATF] |
| 4 | 22N59-12101 | | LINE,COVER,LH | ﾗｲﾝ | 1 | |
| 5 | 22N59-12111 | | LINE,COVER,RH | ﾗｲﾝ | 1 | |
| 6 | 22N19-12601 | | CHART,CAPACITY,2.0T | ﾁｬｰﾄ | 1 | A,C,E,G,J,L<br>(VM200-500) |
| - | 27419-12101 | | CHART,CAPACITY,2.0T | ﾁｬｰﾄ | 1 | A,C,E,G,K,M<br>(VM550-600) |
| - | 22N59-12601 | | CHART,CAPACITY,2.5T | ﾁｬｰﾄ | 1 | B,D,F,H,J,L<br>(VM200-500) |
| - | 27539-12021 | | CHART,CAPACITY,2.5T | ﾁｬｰﾄ | 1 | B,D,F,H,K,M<br>(VM550-600) |
| - | 514A3-82331 | | CHART,CAPACITY | ﾁｬｰﾄ | 1 | C,D,J,K<br>[EXB/SPANISH][EXE/SPANISH] |
| - | 514A3-82341 | | CHART,CAPACITY | ﾁｬｰﾄ | 1 | C,D,J,K<br>[EXB/FRENCH][EXE/FRENCH] |
| - | 63110-18921 | | CHART,CAPACITY | ﾁｬｰﾄ | 1 | C,D,J,K<br>[EXB/CHINESE] |
| - | 524T3-84031 | | CHART,CAPACITY | ﾁｬｰﾄ | 1 | C,D,J,K<br>[EXB/RUSSIAN] |
| - | 514A3-82301 | | CHART,CAPACITY | ﾁｬｰﾄ | 1 | C,D,J,K<br>[EXC] |
| - | 514A3-82301 | | CHART,CAPACITY | ﾁｬｰﾄ | 1 | C,D,J,K<br>[EXE/ENGLISH][EXN/ENGLISH] |
| - | 514A3-82321 | | CHART,CAPACITY | ﾁｬｰﾄ | 1 | C,D,J,K<br>[EXE/GERMAN] |
| - | 514A3-82351 | | CHART,CAPACITY | ﾁｬｰﾄ | 1 | C,D,J,K<br>[EXE/DUTCH] |
| - | 514A3-82361 | | CHART,CAPACITY | ﾁｬｰﾄ | 1 | C,D,J,K<br>[EXE/DANISH][EXN/DANISH] |
| - | 514A3-82371 | | CHART,CAPACITY | ﾁｬｰﾄ | 1 | C,D,J,K<br>[EXE/ITALIAN] |

# FIG.192 DECAL (1/2)

(F7029110) ﾃﾞｶﾙ(1/2)

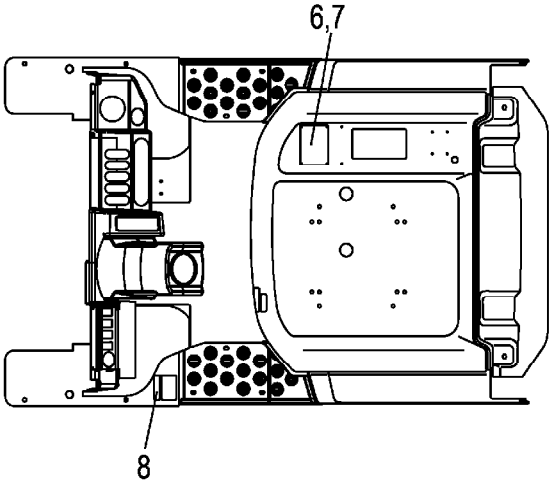


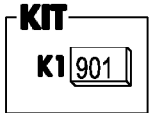


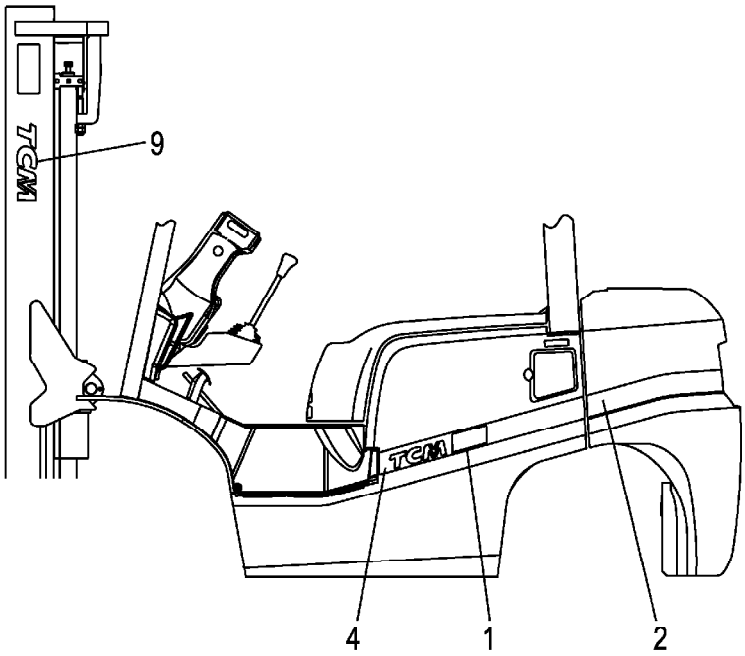


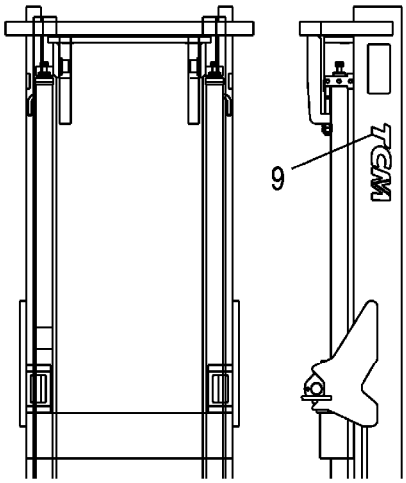


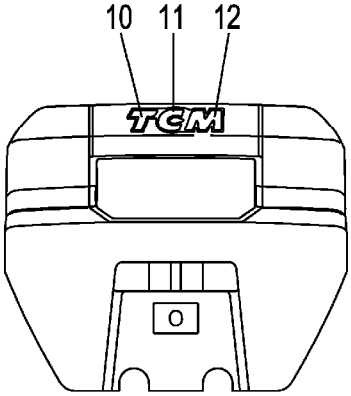


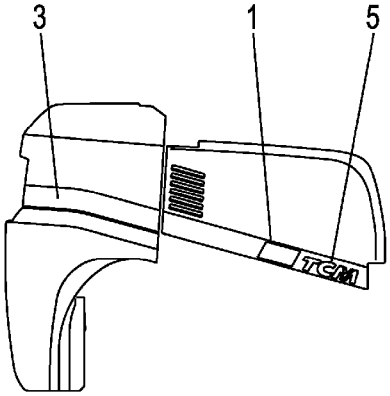

A:FG20C13 FG20T13 D:FG25C3 FG25T3 G:FD20C13 FD20T13 K:FD25C3 FD25T3
B:FG25C13 FG25T13 E:FG20W3 H:FD25C13 FD25T13 L:FD20W3
C:FG20C3 FG20T3 F:FG25W3 J:FD20C3 FD20T3 M:FD25W3

**FIG.192**
(F7029110)

| Item No | Part No. | Mark | Description | | Req'd | Remarks : Serial No. |
|---|---|---|---|---|---|---|
| - | 514A3-82381 | | CHART,CAPACITY | ﾁｬｰﾄ | 1 | C,D,J,K [EXE/GREEK] |
| - | 514A3-82391 | | CHART,CAPACITY | ﾁｬｰﾄ | 1 | C,D,J,K [EXE/PORTUGUESE] |
| - | 529F3-82501 | | CHART,CAPACITY | ﾁｬｰﾄ | 1 | C,D,J,K [EXE/NORWEGIAN] |
| - | 529F3-82511 | | CHART,CAPACITY | ﾁｬｰﾄ | 1 | C,D,J,K [EXE/POLISH] |
| - | 529F3-82521 | | CHART,CAPACITY | ﾁｬｰﾄ | 1 | C,D,J,K [EXE/HUNGARIAN] |
| - | 529F3-82531 | | CHART,CAPACITY | ﾁｬｰﾄ | 1 | C,D,J,K [EXE/CZECH] |
| - | 529F3-82541 | | CHART,CAPACITY | ﾁｬｰﾄ | 1 | C,D,J,K [EXE/TURKISH] |
| - | 529F3-82111 | | CHART,CAPACITY | ﾁｬｰﾄ | 1 | C,D,J,K [EXN/SWEDISH] |
| - | 529F3-82101 | | CHART,CAPACITY | ﾁｬｰﾄ | 1 | C,D,J,K [EXN/FINNISH] |
| 7 | 02432-01008 | | RIVET | ﾘﾍﾞｯﾄ | 4 | |
| 8 | 27049-12172 | * | DECAL,AIR-PRESSURE | ﾃﾞｶﾙ | 1 | |
| - | 225R9-12142 | * | DECAL,AIR-PRESSURE | ﾃﾞｶﾙ | 1 | C,D,J,K [EXB/RUSSIAN] |
| 9 | 273A9-12242 | * | DECAL,TCM | ﾃﾞｶﾙ | 2 | |
| 10 | 22N59-12041 | | DECAL,B/WEIGHT,T | ﾃﾞｶﾙ | 1 | |
| 11 | 22N59-12051 | | DECAL,B/WEIGHT,C | ﾃﾞｶﾙ | 1 | |
| 12 | 22N59-12061 | | DECAL,B/WEIGHT,M | ﾃﾞｶﾙ | 1 | |
| 13 | 22A09-12101 | + | PLATE,LICENCE | ﾌﾟﾚｰﾄ | 1 | A,B,G,H |

# FIG.193 DECAL (2/2)

(F7029120) ﾃﾞｶﾙ(2/2)

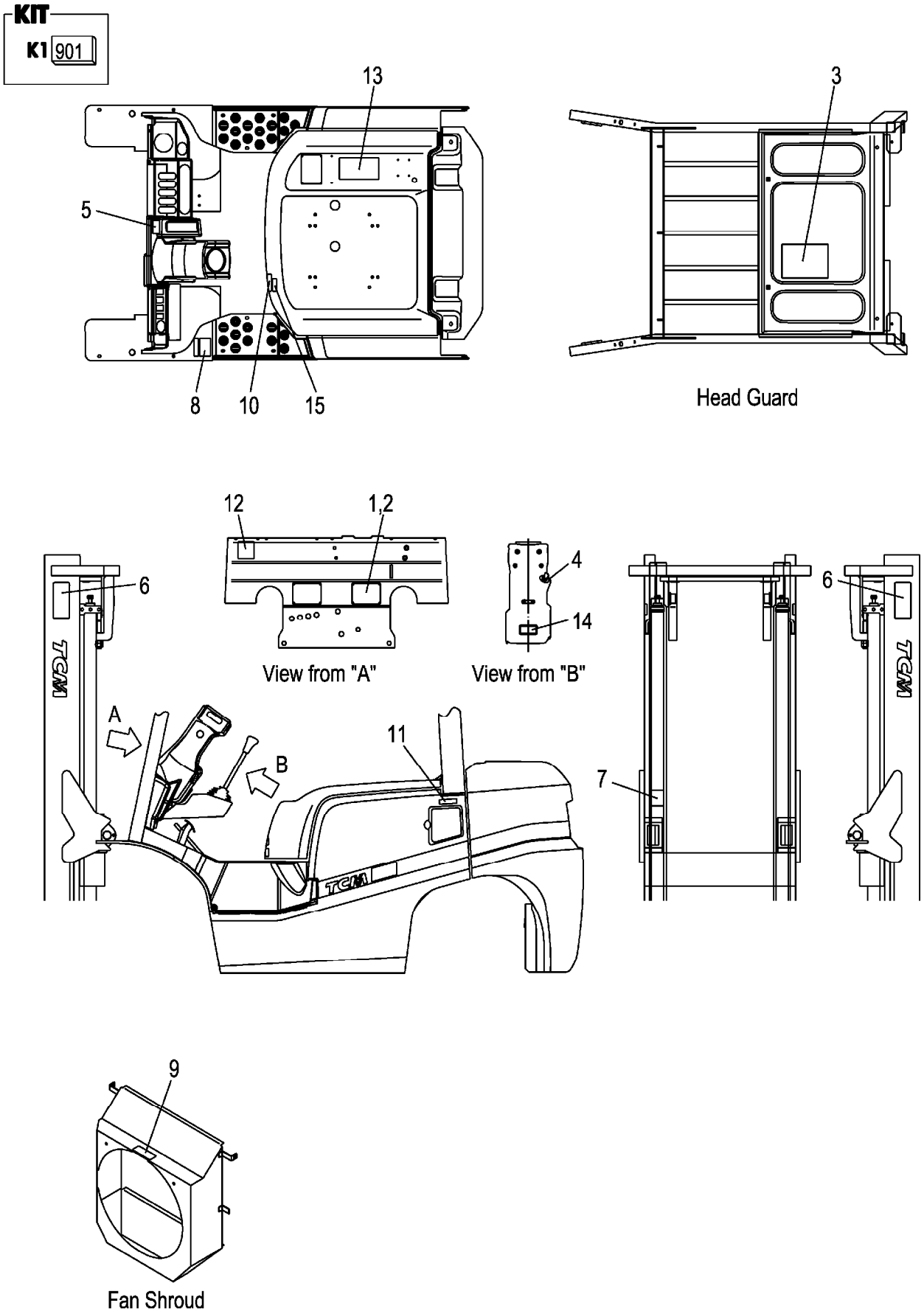

A:FG20C13 FG20T13 FG25C13 FG25T13 C:FD20C13 FD20T13 FD25C13 FD25T13 (F7029120)
B:FG20C3 FG20T3 FG25C3 FG25T3 FG20W3 FG25W3 D:FD20C3 FD20T3 FD25C3 FD25T3 FD20W3 FD25W3

| Item No | Part No. | Mark | Description | | Req'd | Remarks : Serial No. |
|---|---|---|---|---|---|---|
| 901 | C-11452-2B5-D | K1 | KIT,DECAL,JPN | ﾃﾞｶﾙｷｯﾄ | 1 | A,B<br>INC.3-15,FIG.192:8,9 |
| - | C-11452-2N5-D | K1 | KIT,DECAL,JPN | ﾃﾞｶﾙｷｯﾄ | 1 | C,D<br>INC.3-15,FIG.192:8,9 |
| 1 | NO PART NO. | # | PLATE,NAME | ﾌﾟﾚｰﾄ | 1 | |
| 2 | 216G9-12131 | | RIVET | ﾘﾍﾞｯﾄ | 4 | |
| 3 | 22N59-12261 | * | DECAL,LUBRICATION | ﾃﾞｶﾙ | 1 | |
| 4 | 216G9-12071 | * | DECAL,STARTER-SWITCH | ﾃﾞｶﾙ | 1 | |
| 5 | 214A5-53012 | * | DECAL,BRAKE-LEVER | ﾃﾞｶﾙ | 1 | |
| 6 | 27419-12062 | * | DECAL,MAST-CAUTION | ﾃﾞｶﾙ | 2 | |
| 7 | 27419-12072 | * | DECAL,CROSS-BEAM | ﾃﾞｶﾙ | 1 | |
| 8 | 216G9-12062 | * | DECAL,TIRE-CAUTION | ﾃﾞｶﾙ | 1 | |
| 9 | 216G9-12052 | * | DECAL,FAN-CAUTION | ﾃﾞｶﾙ | 1 | |
| 10 | 238F9-12071 | * | DECAL,FUEL-CAPACITY | ﾃﾞｶﾙ | 1 | |
| 11 | 21239-12501 | * | DECAL,GASOLINE | ﾃﾞｶﾙ | 1 | A,B |
| - | 239A9-12501 | * | DECAL,LIGHT-OIL | ﾃﾞｶﾙ | 1 | C,D |
| 12 | 271A9-12251 | * | DECAL,CAUTION | ﾃﾞｶﾙ | 1 | |
| 13 | 239A9-12301 | * | DECAL,WARNING-PLATE | ﾃﾞｶﾙ | 1 | |
| 14 | 26519-12281 | * | DECAL,HOSE | ﾃﾞｶﾙ | 1 | |
| 15 | 22N59-12351 | * | DECAL,BONNET-CAUTION | ﾃﾞｶﾙ | 1 | |

# FIG.194 DECAL (2/2)[EXB]

(F70291B0) デカル(2/2)

**KIT**

| K1 | K2 | K3 | K4 | K5 |
|---|---|---|---|---|
| 901 | 902 | 903 | 904 | 905 |

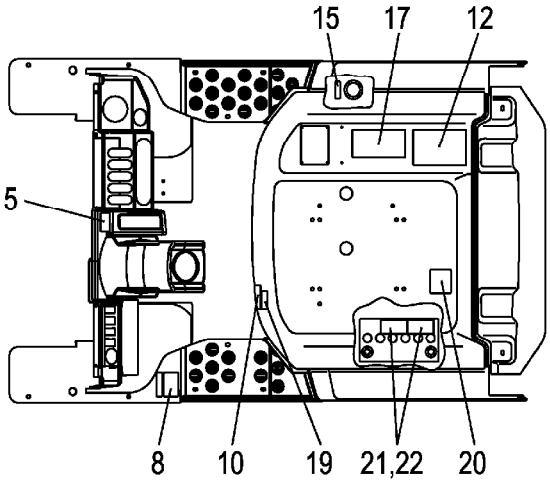


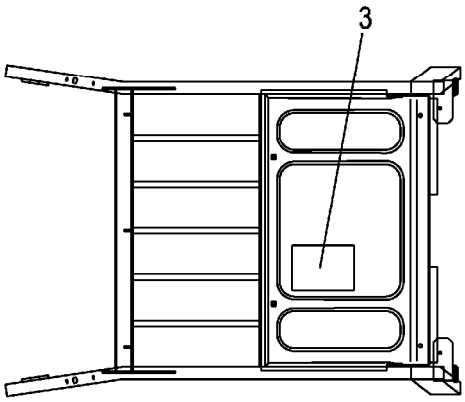


Head Guard

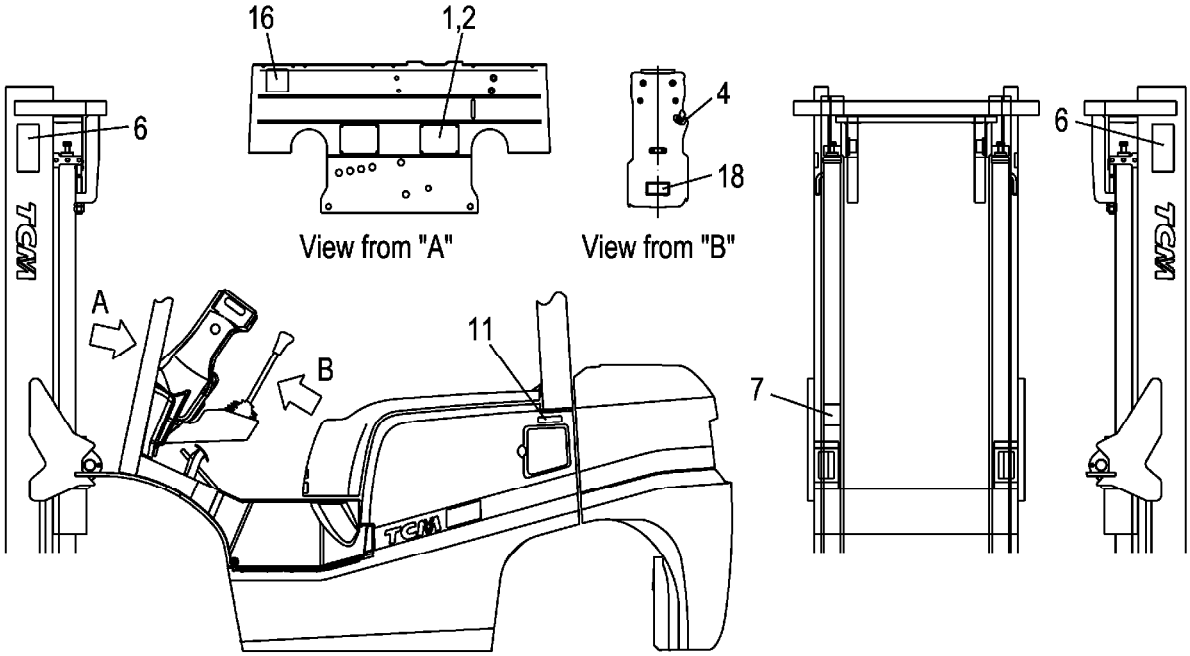


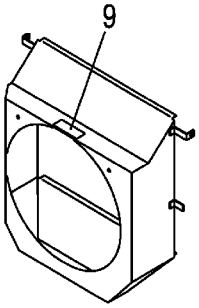


Fan Shroud

Radiator Reserve Tank

A:FG20C3 FG20T3 FG25C3 FG25T3
B:FD20C3 FD20T3 FD25C3 FD25T3

| Item No | Part No. | Mark | Description | | Req'd | Remarks : Serial No. |
|---|---|---|---|---|---|---|
| 901 | C-11452-2B0-E | K1 | KIT,DECAL,ENGLISH | ﾃﾞｶﾙｷｯﾄ | 1 | A<br>[EXB/ENGLISH]<br>INC.3-11,16-23,FIG.192:8,9 |
| - | C-11452-2N0-E | K1 | KIT,DECAL,ENGLISH | ﾃﾞｶﾙｷｯﾄ | 1 | B<br>[EXB/ENGLISH]<br>INC.3-11,16-23,FIG.192:8,9 |
| 902 | C-11452-2B0-S | K2 | KIT,DECAL,SPANISH | ﾃﾞｶﾙｷｯﾄ | 1 | A<br>[EXB/SPANISH]<br>INC.3-11,15-23,FIG.192:8,9 |
| - | C-11452-2N0-S | K2 | KIT,DECAL,SPANISH | ﾃﾞｶﾙｷｯﾄ | 1 | B<br>[EXB/SPANISH]<br>INC.3-11,15-23,FIG.192:8,9 |
| 903 | C-11452-2B0-BF | K3 | KIT,DECAL,FRENCH | ﾃﾞｶﾙｷｯﾄ | 1 | A<br>[EXB/FRENCH]<br>INC.3-11,15-23,FIG.192:8,9 |
| - | C-11452-2N0-BF | K3 | KIT,DECAL,FRENCH | ﾃﾞｶﾙｷｯﾄ | 1 | B<br>[EXB/FRENCH]<br>INC.3-11,15-23,FIG.192:8,9 |
| 904 | C-11452-2B0-C | K4 | KIT,DECAL,CHINESE | ﾃﾞｶﾙｷｯﾄ | 1 | A<br>[EXB/CHINESE]<br>INC.3-12,15-21,23,<br>FIG.192:8,9 |
| - | C-11452-2N0-C | K4 | KIT,DECAL,CHINESE | ﾃﾞｶﾙｷｯﾄ | 1 | B<br>[EXB/CHINESE]<br>INC.3-12,15-21,23,<br>FIG.192:8,9 |
| 905 | C-11452-2B0-R | K5 | KIT,DECAL,RUSSIAN | ﾃﾞｶﾙｷｯﾄ | 1 | A<br>[EXB/RUSSIAN]<br>INC.3-11,13-23,FIG.192:8,9 |
| - | C-11452-2N0-R | K5 | KIT,DECAL,RUSSIAN | ﾃﾞｶﾙｷｯﾄ | 1 | B<br>[EXB/RUSSIAN]<br>INC.3-11,13-23,FIG.192:8,9 |
| 1 | NO PART NO. | # | PLATE,NAME | ﾌﾟﾚｰﾄ | 1 | [EXB/ENGLISH] |
| - | NO PART NO. | # | PLATE,NAME | ﾌﾟﾚｰﾄ | 1 | [EXB/SPANISH] |
| - | NO PART NO. | # | PLATE,NAME | ﾌﾟﾚｰﾄ | 1 | [EXB/FRENCH] |
| - | NO PART NO. | # | PLATE,NAME | ﾌﾟﾚｰﾄ | 1 | [EXB/CHINESE] |
| - | NO PART NO. | # | PLATE,NAME | ﾌﾟﾚｰﾄ | 1 | [EXB/RUSSIAN] |
| 2 | 216G9-12131 | | RIVET | ﾘﾍﾞｯﾄ | 4 | [EXB] |
| 3 | 52N52-72101 | * | CHART,LUBRICATION | ﾁｬｰﾄ | 1 | [EXB/ENGLISH] |
| - | 52N53-82101 | * | CHART,LUBRICATION | ﾁｬｰﾄ | 1 | [EXB/SPANISH] |
| - | 52N53-82111 | * | CHART,LUBRICATION | ﾁｬｰﾄ | 1 | [EXB/FRENCH] |
| - | 52N52-82401 | * | CHART,LUBRICATION | ﾁｬｰﾄ | 1 | [EXB/CHINESE] |
| - | 52N52-82411 | * | CHART,LUBRICATION | ﾁｬｰﾄ | 1 | [EXB/RUSSIAN] |
| 4 | 216G9-12071 | * | DECAL,STARTER-SWITCH | ﾃﾞｶﾙ | 1 | [EXB] |
| - | 516G3-82011 | * | DECAL,STARTER-SWITCH | ﾃﾞｶﾙ | 1 | [EXB/SPANISH] |
| - | 232W9-12001 | * | DECAL,STARTER-SWITCH | ﾃﾞｶﾙ | 1 | [EXB/RUSSIAN] |
| 5 | 514A3-82002 | * | DECAL,BRAKE-LEVER | ﾃﾞｶﾙ | 1 | [EXB/ENGLISH] |
| - | 514A3-82012 | * | DECAL,BRAKE-LEVER | ﾃﾞｶﾙ | 1 | [EXB/SPANISH] |
| - | 514A3-82022 | * | DECAL,BRAKE-LEVER | ﾃﾞｶﾙ | 1 | [EXB/FRENCH] |
| - | 514A2-82012 | * | DECAL,BRAKE-LEVER | ﾃﾞｶﾙ | 1 | [EXB/CHINESE] |

# FIG.194 DECAL (2/2)[EXB]

(F70291B0) デカル(2/2)

**KIT**

| K1 | K2 | K3 | K4 | K5 |
|---|---|---|---|---|
| 901 | 902 | 903 | 904 | 905 |

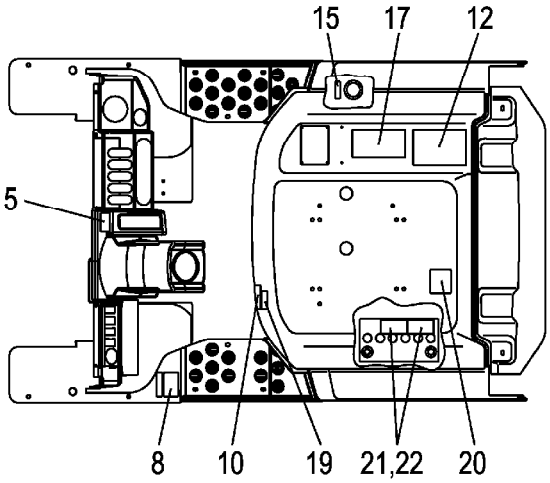


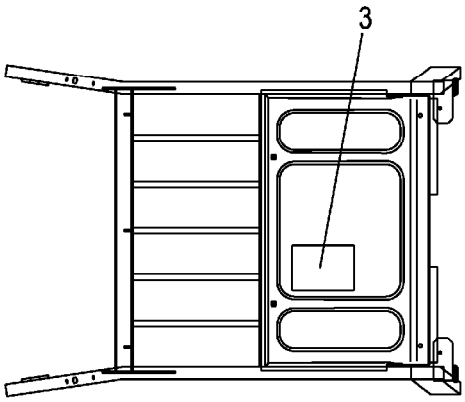


Head Guard

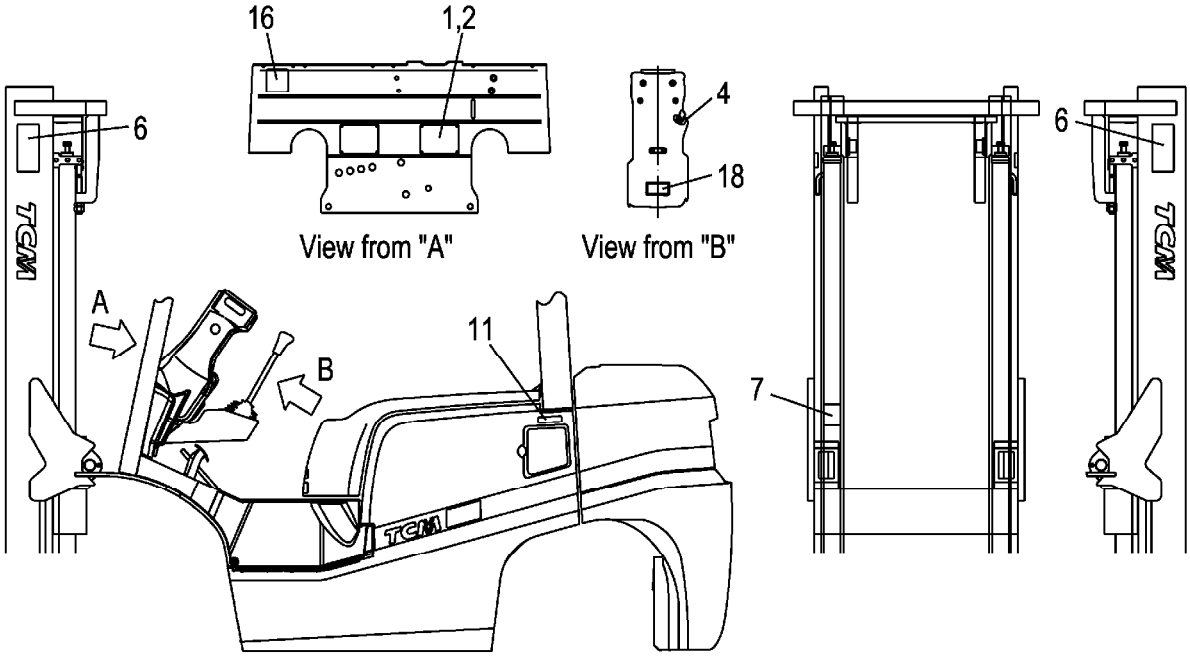


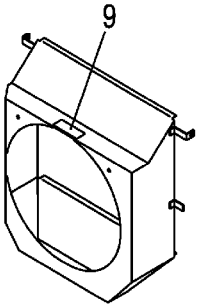


Fan Shroud

Radiator Reserve Tank

A:FG20C3 FG20T3 FG25C3 FG25T3
B:FD20C3 FD20T3 FD25C3 FD25T3

| Item No | Part No. | Mark | Description | | Req'd | Remarks : Serial No. |
|---|---|---|---|---|---|---|
| - | 225R9-12112 | * | DECAL,BRAKE-LEVER | ﾃﾞｶﾙ | 1 | [EXB/RUSSIAN] |
| 6 | 27419-12061 | * | DECAL,MAST-CAUTION | ﾃﾞｶﾙ | 2 | [EXB] |
| - | 27419-12062 | * | DECAL,MAST-CAUTION | ﾃﾞｶﾙ | 2 | [EXB/RUSSIAN] |
| 7 | 27419-12071 | * | DECAL,CROSS-BEAM | ﾃﾞｶﾙ | 1 | [EXB] |
| - | 27419-12072 | * | DECAL,CROSS-BEAM | ﾃﾞｶﾙ | 1 | [EXB/RUSSIAN] |
| 8 | 516G2-72711 | * | DECAL,TIRE-CAUTION | ﾃﾞｶﾙ | 1 | [EXB/ENGLISH] |
| - | 516G3-82211 | * | DECAL,TIRE-CAUTION | ﾃﾞｶﾙ | 1 | [EXB/SPANISH] |
| - | 516G3-82221 | * | DECAL,TIRE-CAUTION | ﾃﾞｶﾙ | 1 | [EXB/FRENCH] |
| - | 516G2-82061 | * | DECAL,TIRE-CAUTION | ﾃﾞｶﾙ | 1 | [EXB/CHINESE] |
| - | 232W9-12021 | * | DECAL,TIRE-CAUTION | ﾃﾞｶﾙ | 1 | [EXB/RUSSIAN] |
| 9 | 516G2-72701 | * | DECAL,FAN-CAUTION | ﾃﾞｶﾙ | 1 | [EXB/ENGLISH] |
| - | 516G3-82111 | * | DECAL,FAN-CAUTION | ﾃﾞｶﾙ | 1 | [EXB/SPANISH] |
| - | 516G3-82121 | * | DECAL,FAN-CAUTION | ﾃﾞｶﾙ | 1 | [EXB/FRENCH] |
| - | 516G2-82051 | * | DECAL,FAN-CAUTION | ﾃﾞｶﾙ | 1 | [EXB/CHINESE] |
| - | 232W9-12011 | * | DECAL,FAN-CAUTION | ﾃﾞｶﾙ | 1 | [EXB/RUSSIAN] |
| 10 | 536G2-82181 | * | DECAL,FUEL-CAPACITY | ﾃﾞｶﾙ | 1 | [EXB/ENGLISH] |
| - | 536G3-82001 | * | DECAL,FUEL-CAPACITY | ﾃﾞｶﾙ | 1 | [EXB/SPANISH] |
| - | 536G3-82011 | * | DECAL,FUEL-CAPACITY | ﾃﾞｶﾙ | 1 | [EXB/FRENCH] |
| - | 536G2-82281 | * | DECAL,FUEL-CAPACITY | ﾃﾞｶﾙ | 1 | [EXB/CHINESE] |
| - | 239T9-12071 | * | DECAL,FUEL-CAPACITY | ﾃﾞｶﾙ | 1 | [EXB/RUSSIAN] |
| 11 | 51232-82001 | * | DECAL,GASOLINE | ﾃﾞｶﾙ | 1 | A [EXB/ENGLISH] |
| - | 509K3-82681 | * | DECAL,LIGHT-OIL | ﾃﾞｶﾙ | 1 | B [EXB/ENGLISH] |
| - | 51232-82021 | * | DECAL,GASOLINE | ﾃﾞｶﾙ | 1 | A [EXB/SPANISH] |
| - | 509K3-82811 | * | DECAL,LIGHT-OIL | ﾃﾞｶﾙ | 1 | B [EXB/SPANISH] |
| - | 51232-82011 | * | DECAL,GASOLINE | ﾃﾞｶﾙ | 1 | A [EXB/FRENCH] |
| - | 509K3-82821 | * | DECAL,LIGHT-OIL | ﾃﾞｶﾙ | 1 | B [EXB/FRENCH] |
| - | 51232-82032 | * | DECAL,GASOLINE | ﾃﾞｶﾙ | 1 | A [EXB/CHINESE] |
| - | 539A2-82051 | * | DECAL,LIGHT-OIL | ﾃﾞｶﾙ | 1 | B [EXB/CHINESE] |
| - | 536G2-82021 | * | DECAL,GASOLINE | ﾃﾞｶﾙ | 1 | A [EXB/RUSSIAN] |
| - | 225R9-12001 | * | DECAL,LIGHT-OIL | ﾃﾞｶﾙ | 1 | B [EXB/RUSSIAN] |
| 12 | 53652-82551 | * | DECAL,CAUTION | ﾃﾞｶﾙ | 1 | [EXB/CHINESE] |
| 13 | 225R9-12091 | +* | DECAL,BATTERY-SWITCH | ﾃﾞｶﾙ | 1 | [EXB/RUSSIAN] |
| 14 | 225R9-12081 | +* | DECAL,PAN-HEATER-OIL | ﾃﾞｶﾙ | 1 | [EXB/RUSSIAN] |
| 15 | 53652-82401 | * | DECAL,OIL | ﾃﾞｶﾙ | 1 | [EXB/SPANISH] |
| - | 53652-82011 | * | DECAL,OIL | ﾃﾞｶﾙ | 1 | [EXB/FRENCH] |
| - | 53652-82541 | * | DECAL,OIL | ﾃﾞｶﾙ | 1 | [EXB/CHINESE] |
| - | 225R9-12071 | * | DECAL,HYDRAULIC-OIL | ﾃﾞｶﾙ | 1 | [EXB/RUSSIAN] |
| 16 | 571A3-82361 | * | DECAL,CAUTION | ﾃﾞｶﾙ | 1 | [EXB] |
| 17 | 516G3-82801 | * | DECAL,CAUTION | ﾃﾞｶﾙ | 1 | [EXB/ENGLISH] |
| - | 516G3-82821 | * | DECAL,CAUTION | ﾃﾞｶﾙ | 1 | [EXB/SPANISH] |

# FIG.194 DECAL (2/2)[EXB]

(F70291B0) デカル(2/2)

**KIT**

| K1 | K2 | K3 | K4 | K5 |
|---|---|---|---|---|
| 901 | 902 | 903 | 904 | 905 |

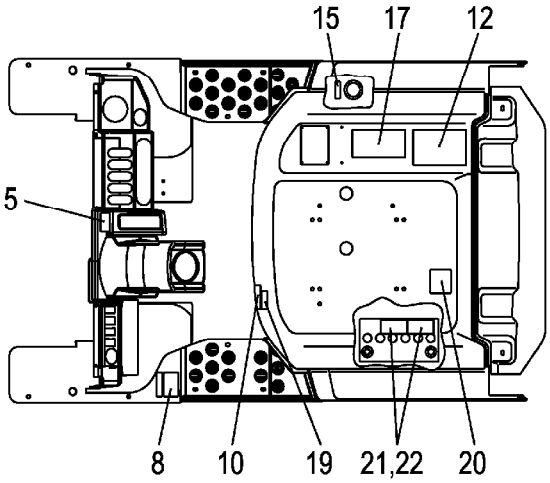


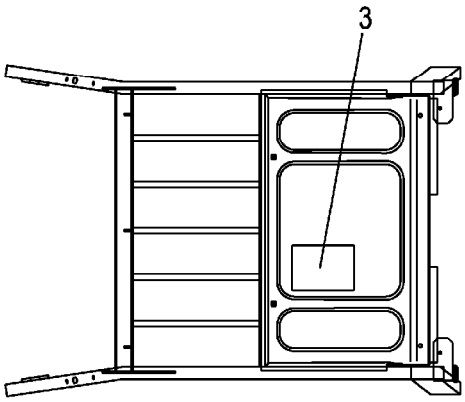


Head Guard

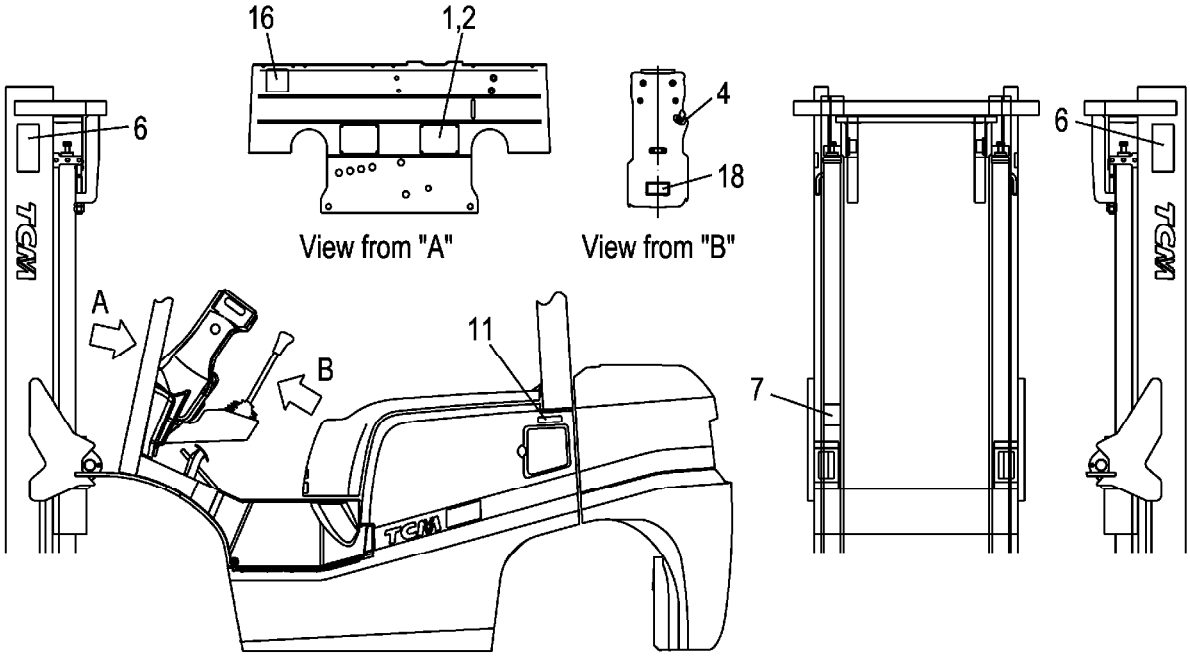


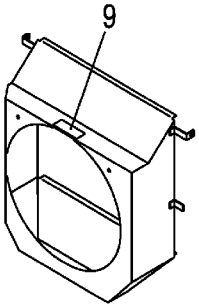


Fan Shroud

Radiator Reserve Tank

A:FG20C3 FG20T3 FG25C3 FG25T3
B:FD20C3 FD20T3 FD25C3 FD25T3

| Item No | Part No. | Mark | Description | Req'd | Remarks : Serial No. |
|---|---|---|---|---|---|
| - | 516G3-82831 | * | DECAL,CAUTION デカル | 1 | [EXB/FRENCH] |
| - | 52672-82073 | * | DECAL,WARNING-PLATE デカル | 1 | [EXB/CHINESE] |
| - | 225R9-12052 | * | DECAL,CAUTION デカル | 1 | [EXB/RUSSIAN] |
| 18 | 509K2-82251 | * | DECAL,STEERING-HOSE デカル | 1 | [EXB/ENGLISH] |
| - | 509K3-83011 | * | DECAL,STEERING-HOSE デカル | 1 | [EXB/SPANISH] |
| - | 509K3-83021 | * | DECAL,STEERING-HOSE デカル | 1 | [EXB/FRENCH] |
| - | 509K3-83451 | * | DECAL,STEERING-HOSE デカル | 1 | [EXB/CHINESE] |
| - | 509K3-83461 | * | DECAL,STEERING-HOSE デカル | 1 | [EXB/RUSSIAN] |
| 19 | 52N52-72201 | * | DECAL,BONNET-CAUTION デカル | 1 | [EXB/ENGLISH] |
| - | 52N53-82301 | * | DECAL,BONNET-CAUTION デカル | 1 | [EXB/SPANISH] |
| - | 52N53-82311 | * | DECAL,BONNET-CAUTION デカル | 1 | [EXB/FRENCH] |
| - | 52N52-82501 | * | DECAL,BONNET-CAUTION デカル | 1 | [EXB/CHINESE] |
| - | 52N52-82511 | * | DECAL,BONNET-CAUTION デカル | 1 | [EXB/RUSSIAN] |
| 20 | 577H3-82151 | * | DECAL,GAS-SPRING デカル | 1 | [EXB/ENGLISH] |
| - | 577H3-82171 | * | DECAL,GAS-SPRING デカル | 1 | [EXB/SPANISH] |
| - | 577H3-82181 | * | DECAL,GAS-SPRING デカル | 1 | [EXB/FRENCH] |
| - | 577H2-82021 | * | DECAL,GAS-SPRING デカル | 1 | [EXB/CHINESE] |
| - | 577H3-82741 | * | DECAL,GAS-SPRING デカル | 1 | [EXB/RUSSIAN] |
| 21 | 534A3-82311 | * | DECAL,BATTERY,A デカル | 1 | [EXB/ENGLISH] |
| - | 534A3-82331 | * | DECAL,BATTERY,A デカル | 1 | [EXB/SPANISH] |
| - | 534A3-82341 | * | DECAL,BATTERY,A デカル | 1 | [EXB/FRENCH] |
| - | 534A3-82531 | * | DECAL,BATTERY デカル | 1 | [EXB/CHINESE] |
| - | 232W9-12101 | * | DECAL,BATTERY,A デカル | 1 | [EXB/RUSSIAN] |
| 22 | 534A3-82421 | * | DECAL,BATTERY,B デカル | 1 | [EXB/ENGLISH] |
| - | 534A3-82441 | * | DECAL,BATTERY,B デカル | 1 | [EXB/SPANISH] |
| - | 534A3-82451 | * | DECAL,BATTERY,B デカル | 1 | [EXB/FRENCH] |
| - | 232W9-12111 | * | DECAL,BATTERY,B デカル | 1 | [EXB/RUSSIAN] |
| 23 | 23659-12101 | * | DECAL,LIFE-COOLANT デカル | 1 | [EXB] |
| - | 522A3-82641 | * | DECAL,LIFE-COOLANT デカル | 1 | [EXB/SPANISH] |
| - | 522A3-82841 | * | DECAL,LIFE-COOLANT デカル | 1 | [EXB/FRENCH] |
| - | 232W9-12051 | * | DECAL,LIFE-COOLANT デカル | 1 | [EXB/RUSSIAN] |

# FIG.195 DECAL (2/2)[EXC]

(F70291C0) ﾃﾞｶﾙ(2/2)

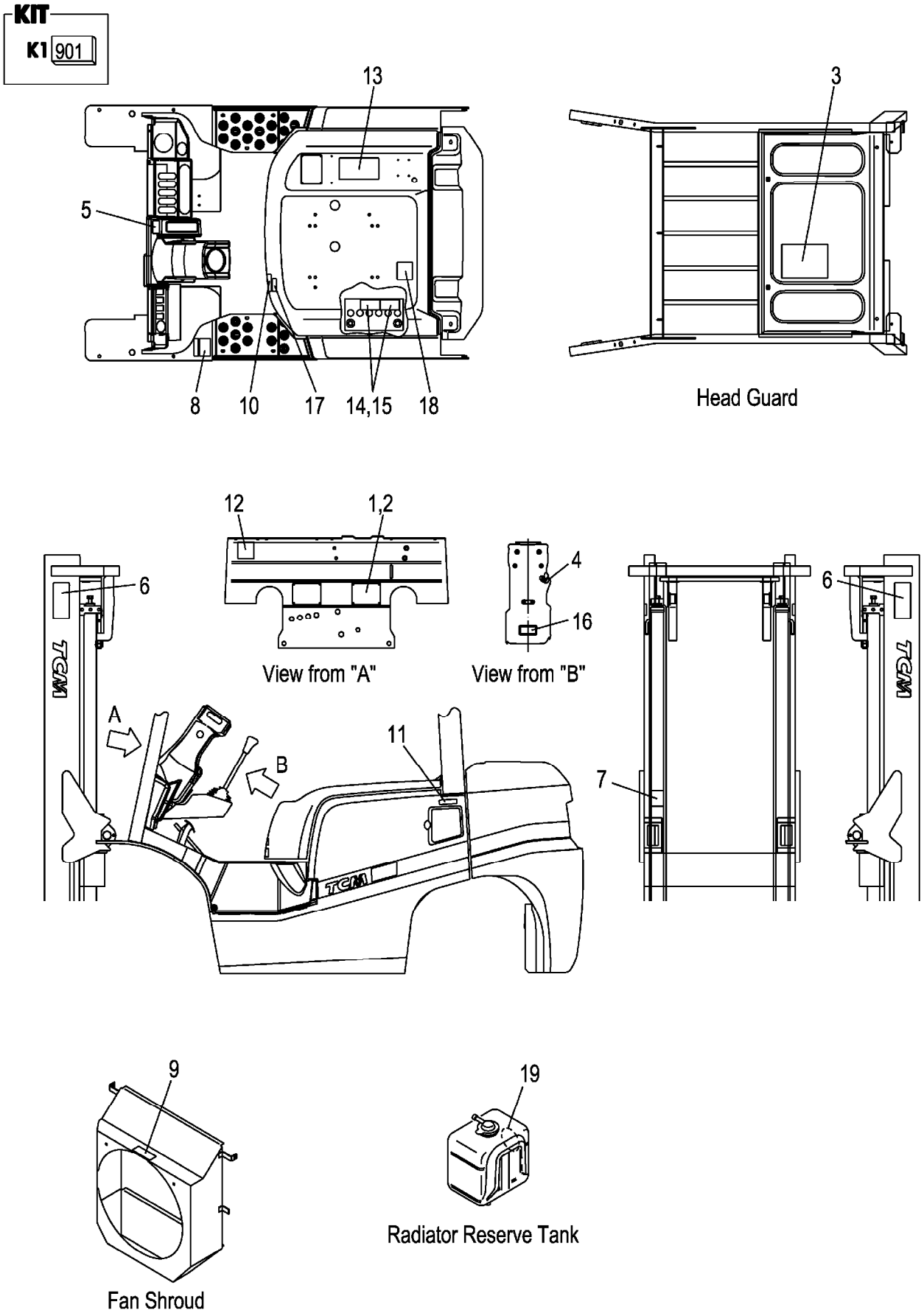

A:FG20C3 FG20T3 FG25C3 FG25T3
B:FD20C3 FD20T3 FD25C3 FD25T3

| Item No | Part No. | Mark | Description | | Req'd | Remarks : Serial No. |
|---|---|---|---|---|---|---|
| 901 | C-11452-2B0-E | K1 | KIT,DECAL,ENGLISH | ﾃﾞｶﾙｷｯﾄ | 1 | A |
| | | | | | | [EXC] INC.3-19,FIG.192:8,9 |
| - | C-11452-2N0-E | K1 | KIT,DECAL,ENGLISH | ﾃﾞｶﾙｷｯﾄ | 1 | B |
| | | | | | | [EXC] INC.3-19,FIG.192:8,9 |
| 1 | NO PART NO. | # | PLATE,NAME | ﾌﾟﾚｰﾄ | 1 | [EXC] |
| 2 | 216G9-12131 | | RIVET | ﾘﾍﾞｯﾄ | 4 | [EXC] |
| 3 | 52N52-72101 | * | CHART,LUBRICATION | ﾁｬｰﾄ | 1 | [EXC] |
| 4 | 216G9-12071 | * | DECAL,STARTER-SWITCH | ﾃﾞｶﾙ | 1 | [EXC] |
| 5 | 514A3-82002 | * | DECAL,BRAKE-LEVER | ﾃﾞｶﾙ | 1 | [EXC] |
| 6 | 27419-12061 | * | DECAL,MAST-CAUTION | ﾃﾞｶﾙ | 2 | [EXC] |
| 7 | 27419-12071 | * | DECAL,CROSS-BEAM | ﾃﾞｶﾙ | 1 | [EXC] |
| 8 | 516G2-72711 | * | DECAL,TIRE-CAUTION | ﾃﾞｶﾙ | 1 | [EXC] |
| 9 | 516G2-72701 | * | DECAL,FAN-CAUTION | ﾃﾞｶﾙ | 1 | [EXC] |
| 10 | 536G2-82181 | * | DECAL,FUEL-CAPACITY | ﾃﾞｶﾙ | 1 | [EXC] |
| 11 | 51232-82001 | * | DECAL,GASOLINE | ﾃﾞｶﾙ | 1 | A |
| | | | | | | [EXC] |
| - | 509K3-82681 | * | DECAL,LIGHT-OIL | ﾃﾞｶﾙ | 1 | B |
| | | | | | | [EXC] |
| 12 | 571A3-82361 | * | DECAL,CAUTION | ﾃﾞｶﾙ | 1 | [EXC] |
| 13 | 516G3-82801 | * | DECAL,CAUTION | ﾃﾞｶﾙ | 1 | [EXC] |
| 14 | 534A3-82311 | * | DECAL,BATTERY,A | ﾃﾞｶﾙ | 1 | [EXC] |
| 15 | 534A3-82421 | * | DECAL,BATTERY,B | ﾃﾞｶﾙ | 1 | [EXC] |
| 16 | 509K2-82251 | * | DECAL,STEERING-HOSE | ﾃﾞｶﾙ | 1 | [EXC] |
| 17 | 52N52-72201 | * | DECAL,BONNET-CAUTION | ﾃﾞｶﾙ | 1 | [EXC] |
| 18 | 577H3-82151 | * | DECAL,GAS-SPRING | ﾃﾞｶﾙ | 1 | [EXC] |
| 19 | 23659-12101 | * | DECAL,LIFE-COOLANT | ﾃﾞｶﾙ | 1 | [EXC] |

# FIG.196 DECAL (2/2)[EXE]

(F70291E0) ﾃﾞｶﾙ(2/2)

**KIT**

K1 901 K2 902

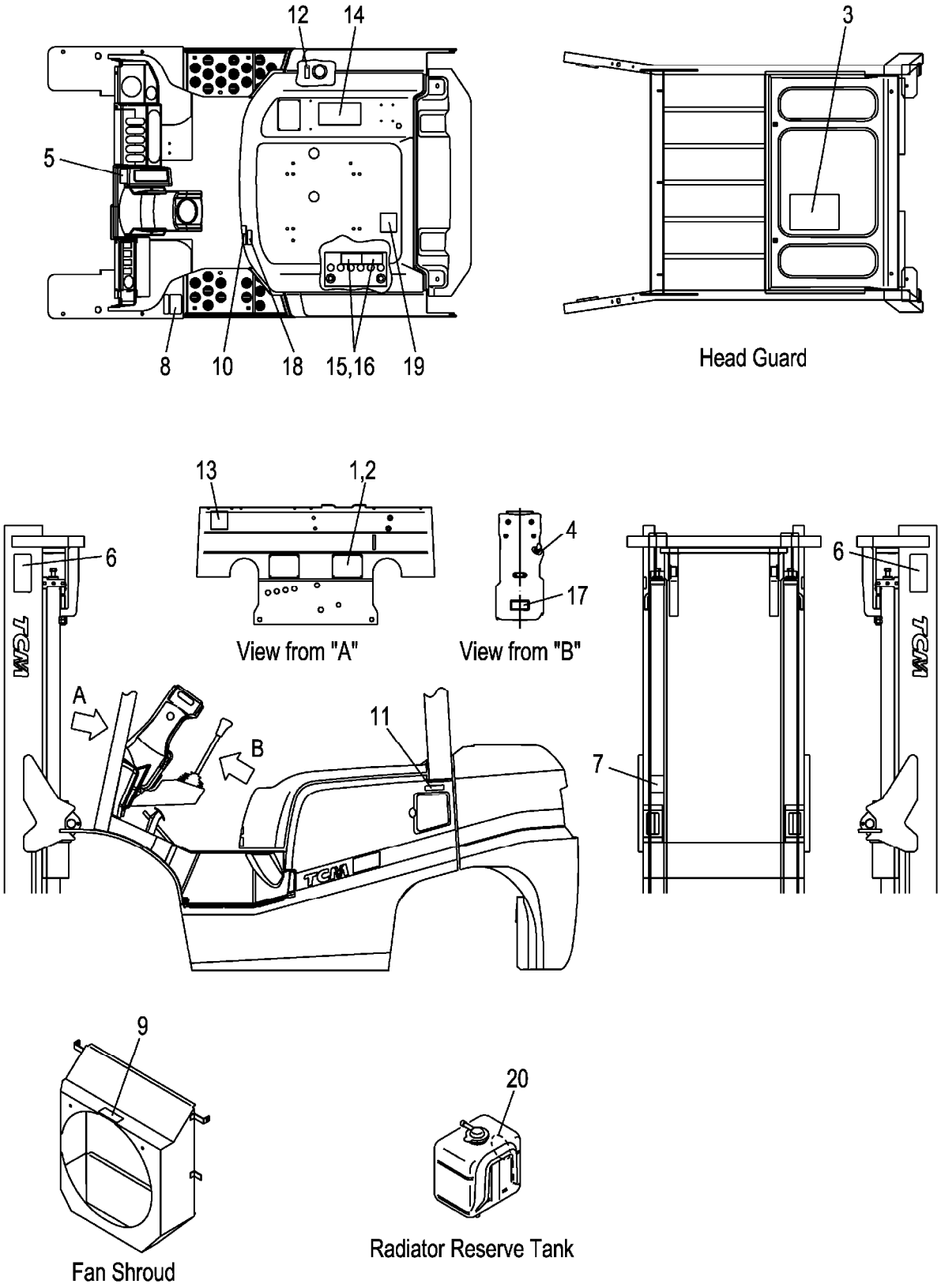

A:FG20C3 FG20T3 FG25C3 FG25T3
B:FD20C3 FD20T3 FD25C3 FD25T3

| Item No | Part No. | Mark | Description | Req'd | Remarks : Serial No. |
|---|---|---|---|---|---|
| 901 | C-11452-2B0-E | K1 | KIT,DECAL,ENGLISH デカルキット | 1 | A<br>[EXE/ENGLISH]<br>INC.3-11,13-20,FIG.192:8,9 |
| - | C-11452-2N0-E | K1 | KIT,DECAL,ENGLISH デカルキット | 1 | B<br>[EXE/ENGLISH]<br>INC.3-11,13-20,FIG.192:8,9 |
| 902 | C-11452-2B0-S | K2 | KIT,DECAL,SPANISH デカルキット | 1 | A<br>[EXE/SPANISH]<br>INC.3-20,FIG.192:8,9 |
| - | C-11452-2N0-S | K2 | KIT,DECAL,SPANISH デカルキット | 1 | B<br>[EXE/SPANISH]<br>INC.3-20,FIG.192:8,9 |
| - | C-11452-2B0-BF | K2 | KIT,DECAL,FRENCH デカルキット | 1 | A<br>[EXE/FRENCH]<br>INC.3-20,FIG.192:8,9 |
| - | C-11452-2N0-BF | K2 | KIT,DECAL,FRENCH デカルキット | 1 | B<br>[EXE/FRENCH]<br>INC.3-20,FIG.192:8,9 |
| - | C-11452-2B0-G | K2 | KIT,DECAL,GERMAN デカルキット | 1 | A<br>[EXE/GERMAN]<br>INC.3-20,FIG.192:8,9 |
| - | C-11452-2N0-G | K2 | KIT,DECAL,GERMAN デカルキット | 1 | B<br>[EXE/GERMAN]<br>INC.3-20,FIG.192:8,9 |
| - | C-11452-2B0-O | K2 | KIT,DECAL,DUTCH デカルキット | 1 | A<br>[EXE/DUTCH]<br>INC.3-20,FIG.192:8,9 |
| - | C-11452-2N0-O | K2 | KIT,DECAL,DUTCH デカルキット | 1 | B<br>[EXE/DUTCH]<br>INC.3-20,FIG.192:8,9 |
| - | C-11452-2B0-DN | K2 | KIT,DECAL,DANISH デカルキット | 1 | A<br>[EXE/DANISH]<br>INC.3-20,FIG.192:8,9 |
| - | C-11452-2N0-DN | K2 | KIT,DECAL,DANISH デカルキット | 1 | B<br>[EXE/DANISH]<br>INC.3-20,FIG.192:8,9 |
| - | C-11452-2B0-I | K2 | KIT,DECAL,ITALIAN デカルキット | 1 | A<br>[EXE/ITALIAN]<br>INC.3-20,FIG.192:8,9 |
| - | C-11452-2N0-I | K2 | KIT,DECAL,ITALIAN デカルキット | 1 | B<br>[EXE/ITALIAN]<br>INC.3-20,FIG.192:8,9 |
| - | C-11452-2B0-GR | K2 | KIT,DECAL,GREEK デカルキット | 1 | A<br>[EXE/GREEK]<br>INC.3-20,FIG.192:8,9 |
| - | C-11452-2N0-GR | K2 | KIT,DECAL,GREEK デカルキット | 1 | B<br>[EXE/GREEK]<br>INC.3-20,FIG.192:8,9 |

# FIG.196 DECAL (2/2)[EXE]

(F70291E0) ﾃﾞｶﾙ(2/2)

**KIT**

K1 901 K2 902

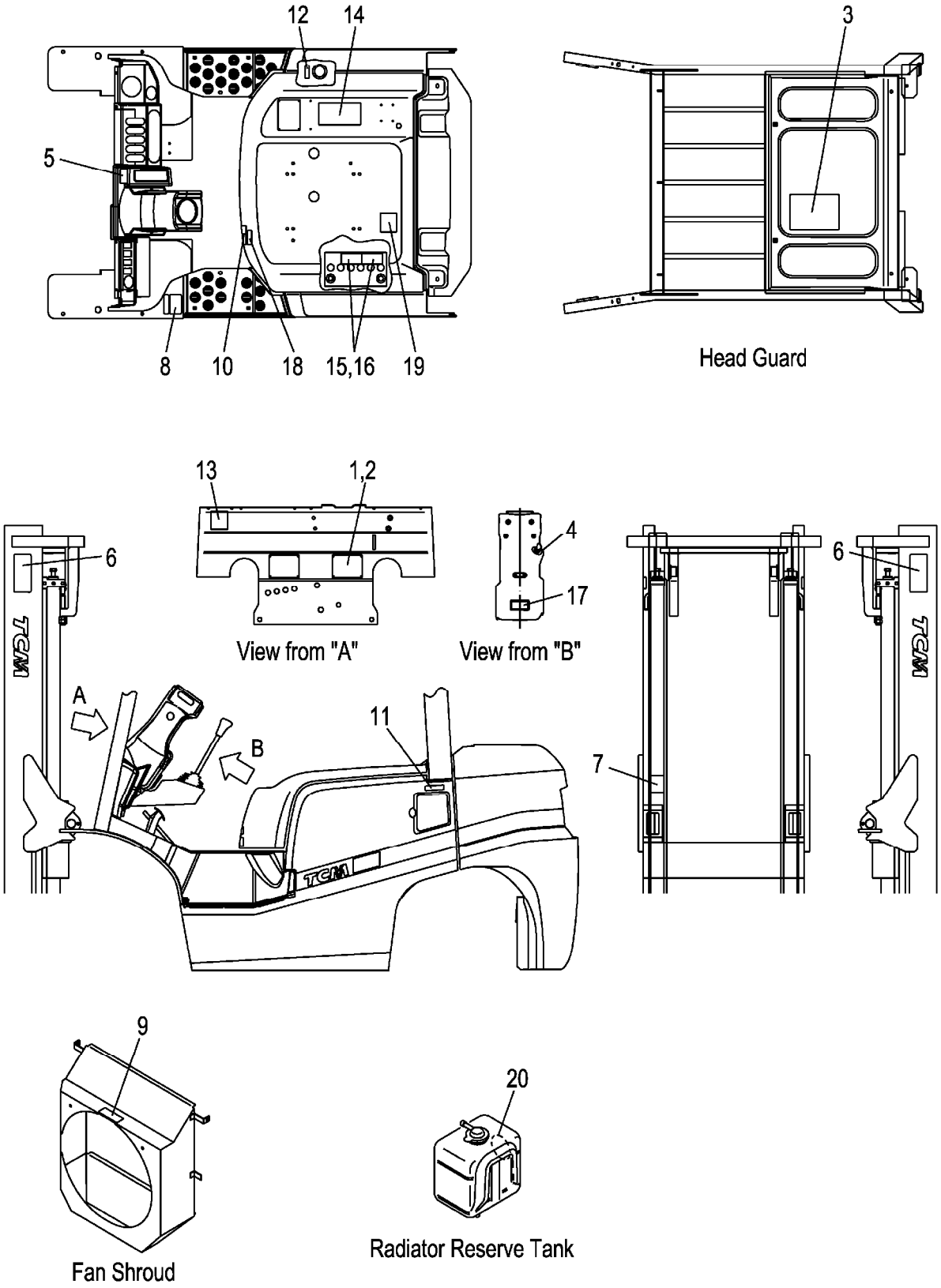

A:FG20C3 FG20T3 FG25C3 FG25T3
B:FD20C3 FD20T3 FD25C3 FD25T3

| Item No | Part No. | Mark | Description | Req'd | Remarks : Serial No. |
|---|---|---|---|---|---|
| - | C-11452-2B0-P | K2 | KIT,DECAL,PORTUGUESE デカルキット | 1 | A [EXE/PORTUGUESE] INC.3-20,FIG.192:8,9 |
| - | C-11452-2N0-P | K2 | KIT,DECAL,PORTUGUESE デカルキット | 1 | B [EXE/PORTUGUESE] INC.3-20,FIG.192:8,9 |
| - | C-11452-2B0-NR | K2 | KIT,DECAL,NORWEGIAN デカルキット | 1 | A [EXE/NORWEGIAN] INC.3-20,FIG.192:8,9 |
| - | C-11452-2N0-NR | K2 | KIT,DECAL,NORWEGIAN デカルキット | 1 | B [EXE/NORWEGIAN] INC.3-20,FIG.192:8,9 |
| - | C-11452-2B0-PL | K2 | KIT,DECAL,POLISH デカルキット | 1 | A [EXE/POLISH] INC.3-20,FIG.192:8,9 |
| - | C-11452-2N0-PL | K2 | KIT,DECAL,POLISH デカルキット | 1 | B [EXE/POLISH] INC.3-20,FIG.192:8,9 |
| - | C-11452-2B0-H | K2 | KIT,DECAL,HUNGARIAN デカルキット | 1 | A [EXE/HUNGARIAN] INC.3-20,FIG.192:8,9 |
| - | C-11452-2N0-H | K2 | KIT,DECAL,HUNGARIAN デカルキット | 1 | B [EXE/HUNGARIAN] INC.3-20,FIG.192:8,9 |
| - | C-11452-2B0-CZ | K2 | KIT,DECAL,CZECH デカルキット | 1 | A [EXE/CZECH] INC.3-20,FIG.192:8,9 |
| - | C-11452-2N0-CZ | K2 | KIT,DECAL,CZECH デカルキット | 1 | B [EXE/CZECH] INC.3-20,FIG.192:8,9 |
| - | C-11452-2B0-TR | K2 | KIT,DECAL デカルキット | 1 | A [EXE/TURKISH] INC.3-20,FIG.192:8,9 |
| - | C-11452-2N0-TR | K2 | KIT,DECAL デカルキット | 1 | B [EXE/TURKISH] INC.3-20,FIG.192:8,9 |
| 1 | NO PART NO. | # | PLATE,NAME プレート | 1 | [EXE/ENGLISH] |
| - | NO PART NO. | # | PLATE,NAME プレート | 1 | [EXE/SPANISH] |
| - | NO PART NO. | # | PLATE,NAME プレート | 1 | [EXE/FRENCH] |
| - | NO PART NO. | # | PLATE,NAME プレート | 1 | [EXE/GERMAN] |
| - | NO PART NO. | # | PLATE,NAME プレート | 1 | [EXE/DUTCH] |
| - | NO PART NO. | # | PLATE,NAME プレート | 1 | [EXE/DANISH] |
| - | NO PART NO. | # | PLATE,NAME プレート | 1 | [EXE/ITALIAN] |
| - | NO PART NO. | # | PLATE,NAME プレート | 1 | [EXE/GREEK] |
| - | NO PART NO. | # | PLATE,NAME プレート | 1 | [EXE/PORTUGUESE] |
| - | NO PART NO. | # | PLATE,NAME プレート | 1 | [EXE/NORWEGIAN] |
| - | NO PART NO. | # | PLATE,NAME プレート | 1 | [EXE/POLISH] |
| - | NO PART NO. | # | PLATE,NAME プレート | 1 | [EXE/HUNGARIAN] |
| - | NO PART NO. | # | PLATE,NAME プレート | 1 | [EXE/CZECH] |
| - | NO PART NO. | # | PLATE,NAME プレート | 1 | [EXE/TURKISH] |

# FIG.196 DECAL (2/2)[EXE]

(F70291E0) ﾃﾞｶﾙ(2/2)

**KIT**

K1 901 K2 902

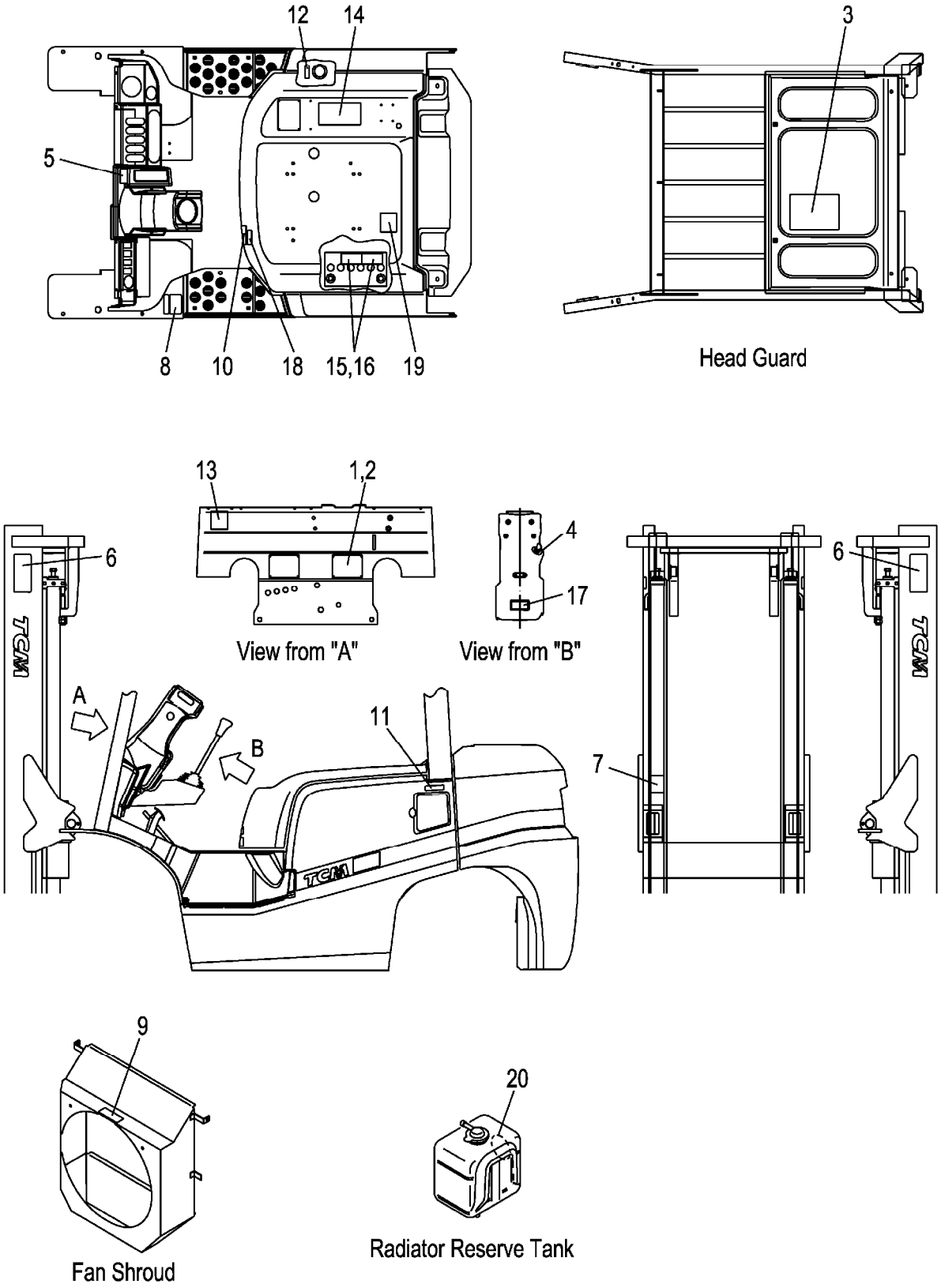

A:FG20C3 FG20T3 FG25C3 FG25T3
B:FD20C3 FD20T3 FD25C3 FD25T3

| Item No | Part No. | Mark | Description | | Req'd | Remarks : Serial No. |
|---|---|---|---|---|---|---|
| 2 | 216G9-12131 | | RIVET | ﾘﾍﾞｯﾄ | 4 | [EXE] |
| 3 | 52N52-72101 | * | CHART,LUBRICATION | ﾁｬｰﾄ | 1 | [EXE/ENGLISH] |
| - | 52N53-82101 | * | CHART,LUBRICATION | ﾁｬｰﾄ | 1 | [EXE/SPANISH] |
| - | 52N53-82111 | * | CHART,LUBRICATION | ﾁｬｰﾄ | 1 | [EXE/FRENCH] |
| - | 52N53-82121 | * | CHART,LUBRICATION | ﾁｬｰﾄ | 1 | [EXE/GERMAN] |
| - | 52N53-82131 | * | CHART,LUBRICATION | ﾁｬｰﾄ | 1 | [EXE/DUTCH] |
| - | 52N53-82141 | * | CHART,LUBRICATION | ﾁｬｰﾄ | 1 | [EXE/DANISH] |
| - | 52N53-82151 | * | CHART,LUBRICATION | ﾁｬｰﾄ | 1 | [EXE/ITALIAN] |
| - | 52N53-82161 | * | CHART,LUBRICATION | ﾁｬｰﾄ | 1 | [EXE/GREEK] |
| - | 52N53-82171 | * | CHART,LUBRICATION | ﾁｬｰﾄ | 1 | [EXE/PORTUGUESE] |
| - | 52N53-82201 | * | CHART,LUBRICATION | ﾁｬｰﾄ | 1 | [EXE/NORWEGIAN] |
| - | 52N53-82211 | * | CHART,LUBRICATION | ﾁｬｰﾄ | 1 | [EXE/POLISH] |
| - | 52N53-82221 | * | CHART,LUBRICATION | ﾁｬｰﾄ | 1 | [EXE/HUNGARIAN] |
| - | 52N53-82231 | * | CHART,LUBRICATION | ﾁｬｰﾄ | 1 | [EXE/CZECH] |
| - | 52N53-82241 | * | CHART,LUBRICATION | ﾁｬｰﾄ | 1 | [EXE/TURKISH] |
| 4 | 216G9-12071 | * | DECAL,STARTER-SWITCH | ﾃﾞｶﾙ | 1 | [EXE] |
| - | 516G3-82011 | * | DECAL,STARTER-SWITCH | ﾃﾞｶﾙ | 1 | [EXE/SPANISH] |
| - | 516G3-82001 | * | DECAL,STARTER-SWITCH | ﾃﾞｶﾙ | 1 | [EXE/GERMAN] |
| - | 516G3-82021 | * | DECAL,STARTER-SWITCH | ﾃﾞｶﾙ | 1 | [EXE/DUTCH] |
| - | 516G3-82031 | * | DECAL,STARTER-SWITCH | ﾃﾞｶﾙ | 1 | [EXE/DANISH] |
| - | 516G3-82041 | * | DECAL,STARTER-SWITCH | ﾃﾞｶﾙ | 1 | [EXE/ITALIAN] |
| - | 516G3-82051 | * | DECAL,STARTER-SWITCH | ﾃﾞｶﾙ | 1 | [EXE/GREEK] |
| - | 516G3-82081 | * | DECAL,STARTER-SWITCH | ﾃﾞｶﾙ | 1 | [EXE/NORWEGIAN] |
| - | 516G3-82561 | * | DECAL,STARTER-SWITCH | ﾃﾞｶﾙ | 1 | [EXE/POLISH] |
| - | 516G3-82571 | * | DECAL,STARTER-SWITCH | ﾃﾞｶﾙ | 1 | [EXE/HUNGARIAN] |
| - | 516G3-82581 | * | DECAL,STARTER-SWITCH | ﾃﾞｶﾙ | 1 | [EXE/CZECH] |
| - | 516G3-82591 | * | DECAL,STARTER-SWITCH | ﾃﾞｶﾙ | 1 | [EXE/TURKISH] |
| 5 | 514A3-82002 | * | DECAL,BRAKE-LEVER | ﾃﾞｶﾙ | 1 | [EXE/ENGLISH] |
| - | 514A3-82012 | * | DECAL,BRAKE-LEVER | ﾃﾞｶﾙ | 1 | [EXE/SPANISH] |
| - | 514A3-82022 | * | DECAL,BRAKE-LEVER | ﾃﾞｶﾙ | 1 | [EXE/FRENCH] |
| - | 514A3-02002 | * | DECAL,BRAKE-LEVER | ﾃﾞｶﾙ | 1 | [EXE/GERMAN] |
| - | 514A3-82032 | * | DECAL,BRAKE-LEVER | ﾃﾞｶﾙ | 1 | [EXE/DUTCH] |
| - | 514A3-82042 | * | DECAL,BRAKE-LEVER | ﾃﾞｶﾙ | 1 | [EXE/DANISH] |
| - | 514A3-82052 | * | DECAL,BRAKE-LEVER | ﾃﾞｶﾙ | 1 | [EXE/ITALIAN] |
| - | 514A3-82062 | * | DECAL,BRAKE-LEVER | ﾃﾞｶﾙ | 1 | [EXE/GREEK] |
| - | 514A3-82072 | * | DECAL,BRAKE-LEVER | ﾃﾞｶﾙ | 1 | [EXE/PORTUGUESE] |
| - | 514A3-82081 | * | DECAL,BRAKE-LEVER | ﾃﾞｶﾙ | 1 | [EXE/NORWEGIAN] |
| - | 514A3-82651 | * | DECAL,BRAKE-LEVER | ﾃﾞｶﾙ | 1 | [EXE/POLISH] |
| - | 514A3-82661 | * | DECAL,BRAKE-LEVER | ﾃﾞｶﾙ | 1 | [EXE/HUNGARIAN] |
| - | 514A3-82671 | * | DECAL,BRAKE-LEVER | ﾃﾞｶﾙ | 1 | [EXE/CZECH] |
| - | 514A3-82681 | * | DECAL,BRAKE-LEVER | ﾃﾞｶﾙ | 1 | [EXE/TURKISH] |
| 6 | 27419-12061 | * | DECAL,MAST-CAUTION | ﾃﾞｶﾙ | 2 | [EXE] |
| 7 | 27419-12071 | * | DECAL,CROSS-BEAM | ﾃﾞｶﾙ | 1 | [EXE] |
| 8 | 516G2-72711 | * | DECAL,TIRE-CAUTION | ﾃﾞｶﾙ | 1 | [EXE/ENGLISH] |
| - | 516G3-82211 | * | DECAL,TIRE-CAUTION | ﾃﾞｶﾙ | 1 | [EXE/SPANISH] |
| - | 516G3-82221 | * | DECAL,TIRE-CAUTION | ﾃﾞｶﾙ | 1 | [EXE/FRENCH] |
| - | 516G3-82201 | * | DECAL,TIRE-CAUTION | ﾃﾞｶﾙ | 1 | [EXE/GERMAN] |
| - | 516G3-82232 | * | DECAL,TIRE-CAUTION | ﾃﾞｶﾙ | 1 | [EXE/DUTCH] |
| - | 516G3-82241 | * | DECAL,TIRE-CAUTION | ﾃﾞｶﾙ | 1 | [EXE/DANISH] |
| - | 516G3-82251 | * | DECAL,TIRE-CAUTION | ﾃﾞｶﾙ | 1 | [EXE/ITALIAN] |

# FIG.196 DECAL (2/2)[EXE]

(F70291E0) ﾃﾞｶﾙ(2/2)

**KIT**

K1 901 K2 902

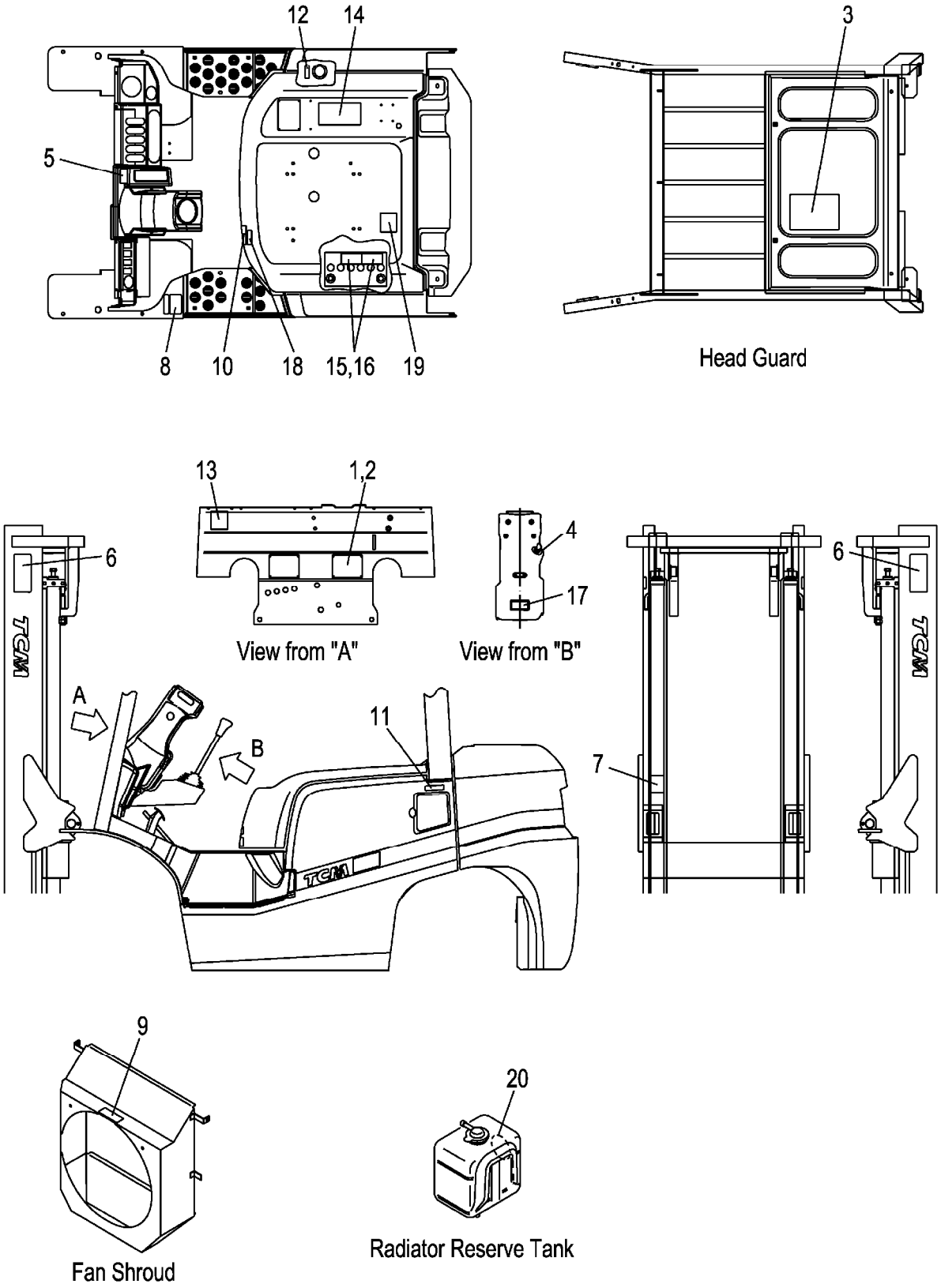

A:FG20C3 FG20T3 FG25C3 FG25T3
B:FD20C3 FD20T3 FD25C3 FD25T3

| Item No | Part No. | Mark | Description | Req'd | Remarks : Serial No. |
|---|---|---|---|---|---|
| - | 516G3-82261 | * | DECAL,TIRE-CAUTION デカル | 1 | [EXE/GREEK] |
| - | 516G3-82271 | * | DECAL,TIRE-CAUTION デカル | 1 | [EXE/PORTUGUESE] |
| - | 516G3-82551 | * | DECAL,TIRE-CAUTION デカル | 1 | [EXE/NORWEGIAN] |
| - | 516G3-83701 | * | DECAL,TIRE-CAUTION デカル | 1 | [EXE/POLISH] |
| - | 516G3-83711 | * | DECAL,TIRE-CAUTION デカル | 1 | [EXE/HUNGARIAN] |
| - | 516G3-83721 | * | DECAL,TIRE-CAUTION デカル | 1 | [EXE/CZECH] |
| - | 516G3-83731 | * | DECAL,TIRE-CAUTION デカル | 1 | [EXE/TURKISH] |
| 9 | 516G2-72701 | * | DECAL,FAN-CAUTION デカル | 1 | [EXE/ENGLISH] |
| - | 516G3-82111 | * | DECAL,FAN-CAUTION デカル | 1 | [EXE/SPANISH] |
| - | 516G3-82121 | * | DECAL,FAN-CAUTION デカル | 1 | [EXE/FRENCH] |
| - | 516G3-82101 | * | DECAL,FAN-CAUTION デカル | 1 | [EXE/GERMAN] |
| - | 516G3-82131 | * | DECAL,FAN-CAUTION デカル | 1 | [EXE/DUTCH] |
| - | 516G3-82141 | * | DECAL,FAN-CAUTION デカル | 1 | [EXE/DANISH] |
| - | 516G3-82151 | * | DECAL,FAN-CAUTION デカル | 1 | [EXE/ITALIAN] |
| - | 516G3-82161 | * | DECAL,FAN-CAUTION デカル | 1 | [EXE/GREEK] |
| - | 516G3-82171 | * | DECAL,FAN-CAUTION デカル | 1 | [EXE/PORTUGUESE] |
| - | 516G3-82091 | * | DECAL,FAN-CAUTION デカル | 1 | [EXE/NORWEGIAN] |
| - | 516G3-83601 | * | DECAL,FAN-CAUTION デカル | 1 | [EXE/POLISH] |
| - | 516G3-83611 | * | DECAL,FAN-CAUTION デカル | 1 | [EXE/HUNGARIAN] |
| - | 516G3-83621 | * | DECAL,FAN-CAUTION デカル | 1 | [EXE/CZECH] |
| - | 516G3-83631 | * | DECAL,FAN-CAUTION デカル | 1 | [EXE/TURKISH] |
| 10 | 536G2-82181 | * | DECAL,FUEL-CAPACITY デカル | 1 | [EXE/ENGLISH] |
| - | 536G3-82001 | * | DECAL,FUEL-CAPACITY デカル | 1 | [EXE/SPANISH] |
| - | 536G3-82011 | * | DECAL,FUEL-CAPACITY デカル | 1 | [EXE/FRENCH] |
| - | 536G3-82021 | * | DECAL,FUEL-CAPACITY デカル | 1 | [EXE/GERMAN] |
| - | 536G3-82031 | * | DECAL,FUEL-CAPACITY デカル | 1 | [EXE/DUTCH] |
| - | 536G3-82041 | * | DECAL,FUEL-CAPACITY デカル | 1 | [EXE/DANISH] |
| - | 536G3-82051 | * | DECAL,FUEL-CAPACITY デカル | 1 | [EXE/ITALIAN] |
| - | 536G3-82061 | * | DECAL,FUEL-CAPACITY デカル | 1 | [EXE/GREEK] |
| - | 536G3-82071 | * | DECAL,FUEL-CAPACITY デカル | 1 | [EXE/PORTUGUESE] |
| - | 536G3-82101 | * | DECAL,FUEL-CAPACITY デカル | 1 | [EXE/NORWEGIAN] |
| - | 536G3-82111 | * | DECAL,FUEL-CAPACITY デカル | 1 | [EXE/POLISH] |
| - | 536G3-82121 | * | DECAL,FUEL-CAPACITY デカル | 1 | [EXE/HUNGARIAN] |
| - | 536G3-82131 | * | DECAL,FUEL-CAPACITY デカル | 1 | [EXE/CZECH] |
| - | 536G3-82141 | * | DECAL,FUEL-CAPACITY デカル | 1 | [EXE/TURKISH] |
| 11 | 51232-82001 | * | DECAL,GASOLINE デカル | 1 | A<br>[EXE/ENGLISH] |
| - | 509K3-82681 | * | DECAL,LIGHT-OIL デカル | 1 | B<br>[EXE/ENGLISH] |
| - | 51232-82021 | * | DECAL,GASOLINE デカル | 1 | A<br>[EXE/SPANISH] |
| - | 509K3-82811 | * | DECAL,LIGHT-OIL デカル | 1 | B<br>[EXE/SPANISH] |
| - | 51232-82011 | * | DECAL,GASOLINE デカル | 1 | A<br>[EXE/FRENCH] |
| - | 509K3-82821 | * | DECAL,LIGHT-OIL デカル | 1 | B<br>[EXE/FRENCH] |
| - | 51233-02011 | * | DECAL,GASOLINE デカル | 1 | A<br>[EXE/GERMAN] |

# FIG.196 DECAL (2/2)[EXE]

(F70291E0) ﾃﾞｶﾙ(2/2)

**KIT**

K1 901 K2 902

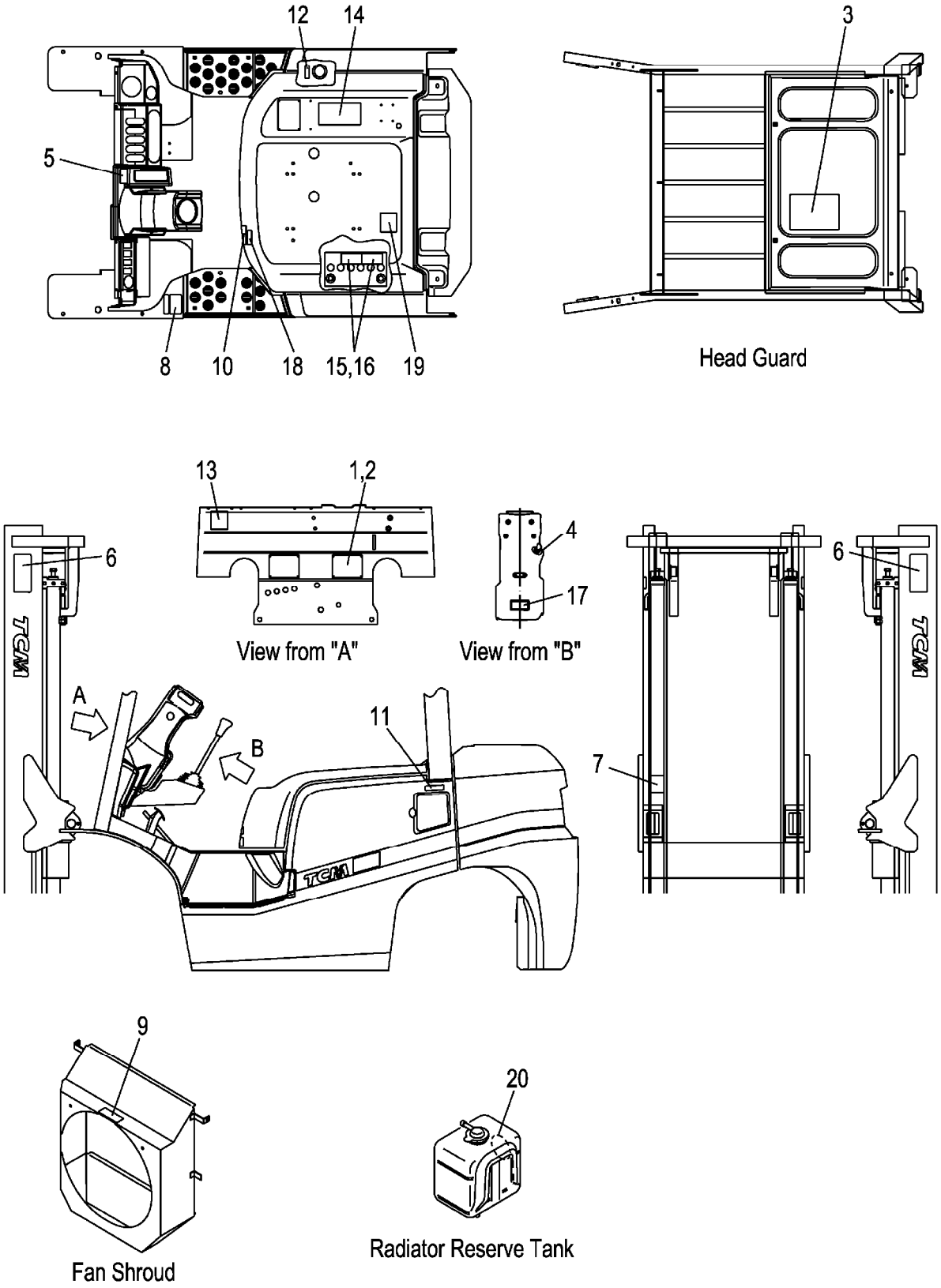

A:FG20C3 FG20T3 FG25C3 FG25T3
B:FD20C3 FD20T3 FD25C3 FD25T3

| Item No | Part No. | Mark | Description | Req'd | Remarks : Serial No. |
|---|---|---|---|---|---|
| - | 509K3-82801 | * | DECAL,LIGHT-OIL デカル | 1 | B [EXE/GERMAN] |
| - | 51233-83021 | * | DECAL,GASOLINE デカル | 1 | A [EXE/DUTCH] |
| - | 509K3-82831 | * | DECAL,LIGHT-OIL デカル | 1 | B [EXE/DUTCH] |
| - | 51233-83221 | * | DECAL,GASOLINE デカル | 1 | A [EXE/DANISH] |
| - | 509K3-82841 | * | DECAL,LIGHT-OIL デカル | 1 | B [EXE/DANISH] |
| - | 51233-83421 | * | DECAL,GASOLINE デカル | 1 | A [EXE/ITALIAN] |
| - | 509K3-82851 | * | DECAL,LIGHT-OIL デカル | 1 | B [EXE/ITALIAN] |
| - | 51233-83621 | * | DECAL,GASOLINE デカル | 1 | A [EXE/GREEK] |
| - | 509K3-82861 | * | DECAL,LIGHT-OIL デカル | 1 | B [EXE/GREEK] |
| - | 51233-83821 | * | DECAL,GASOLINE デカル | 1 | A [EXE/PORTUGUESE] |
| - | 509K3-82871 | * | DECAL,LIGHT-OIL デカル | 1 | B [EXE/PORTUGUESE] |
| - | 528F3-82041 | * | DECAL,GASOLINE デカル | 1 | A [EXE/NORWEGIAN] |
| - | 509K3-83301 | * | DECAL,LIGHT-OIL デカル | 1 | B [EXE/NORWEGIAN] |
| - | 528F3-82051 | * | DECAL,GASOLINE デカル | 1 | A [EXE/POLISH] |
| - | 509K3-83311 | * | DECAL,LIGHT-OIL デカル | 1 | B [EXE/POLISH] |
| - | 528F3-82061 | * | DECAL,GASOLINE デカル | 1 | A [EXE/HUNGARIAN] |
| - | 509K3-83321 | * | DECAL,LIGHT-OIL デカル | 1 | B [EXE/HUNGARIAN] |
| - | 528F3-82071 | * | DECAL,GASOLINE デカル | 1 | A [EXE/CZECH] |
| - | 509K3-83331 | * | DECAL,LIGHT-OIL デカル | 1 | B [EXE/CZECH] |
| - | 528F3-82081 | * | DECAL,GASOLINE デカル | 1 | A [EXE/TURKISH] |
| - | 509K3-83341 | * | DECAL,LIGHT-OIL デカル | 1 | B [EXE/TURKISH] |
| 12 | 53652-82401 | * | DECAL,OIL デカル | 1 | [EXE/SPANISH] |
| - | 53652-82011 | * | DECAL,OIL デカル | 1 | [EXE/FRENCH] |
| - | 51233-02021 | * | DECAL,OIL デカル | 1 | [EXE/GERMAN] |
| - | 522A3-83061 | * | DECAL,OIL デカル | 1 | [EXE/DUTCH][EXE/DANISH] |
| - | 522A3-83461 | * | DECAL,OIL デカル | 1 | [EXE/ITALIAN] |
| - | 522A3-83661 | * | DECAL,OIL デカル | 1 | [EXE/GREEK] |
| - | 522A3-83861 | * | DECAL,OIL デカル | 1 | [EXE/PORTUGUESE] |
| - | 529F3-82601 | * | DECAL,OIL デカル | 1 | [EXE/NORWEGIAN] |

# FIG.196 DECAL (2/2)[EXE]

(F70291E0) ﾃﾞｶﾙ(2/2)

**KIT**

K1 901 K2 902

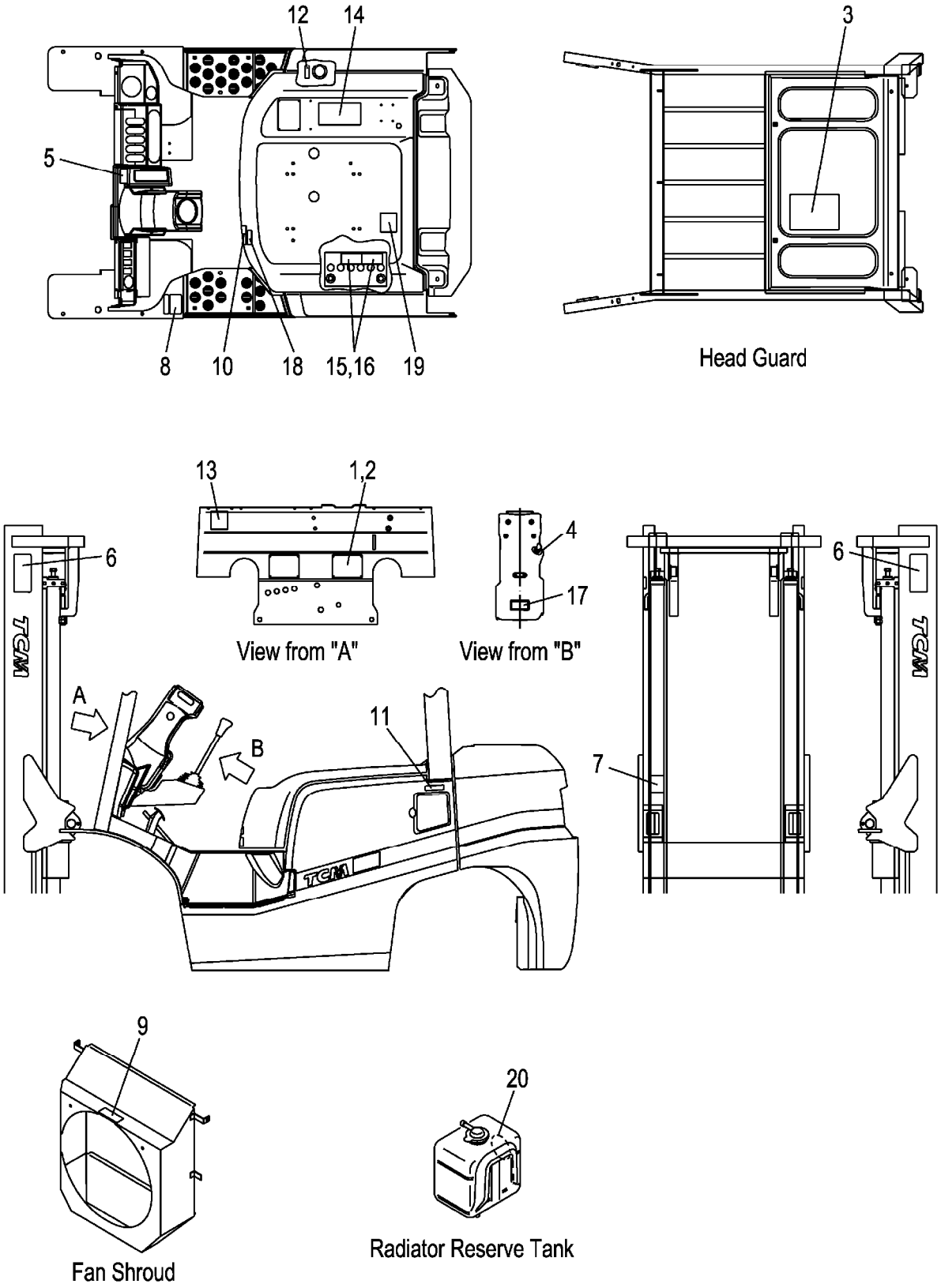

A:FG20C3 FG20T3 FG25C3 FG25T3
B:FD20C3 FD20T3 FD25C3 FD25T3

| Item No | Part No. | Mark | Description | Req'd | Remarks : Serial No. |
|---|---|---|---|---|---|
| - | 529F3-82611 | * | DECAL,OIL デカル | 1 | [EXE/POLISH] |
| - | 529F3-82621 | * | DECAL,OIL デカル | 1 | [EXE/HUNGARIAN] |
| - | 529F3-82631 | * | DECAL,OIL デカル | 1 | [EXE/CZECH] |
| - | 529F3-82641 | * | DECAL,OIL デカル | 1 | [EXE/TURKISH] |
| 13 | 571A3-82361 | * | DECAL,CAUTION デカル | 1 | [EXE] |
| 14 | 516G3-82801 | * | DECAL,CAUTION デカル | 1 | [EXE/ENGLISH] |
| - | 516G3-82821 | * | DECAL,CAUTION デカル | 1 | [EXE/SPANISH] |
| - | 516G3-82831 | * | DECAL,CAUTION デカル | 1 | [EXE/FRENCH] |
| - | 516G3-82811 | * | DECAL,CAUTION デカル | 1 | [EXE/GERMAN] |
| - | 516G3-82841 | * | DECAL,CAUTION デカル | 1 | [EXE/DUTCH] |
| - | 516G3-82851 | * | DECAL,CAUTION デカル | 1 | [EXE/DANISH] |
| - | 516G3-82861 | * | DECAL,CAUTION デカル | 1 | [EXE/ITALIAN] |
| - | 516G3-82871 | * | DECAL,CAUTION デカル | 1 | [EXE/GREEK] |
| - | 516G3-82881 | * | DECAL,CAUTION デカル | 1 | [EXE/PORTUGUESE] |
| - | 516G3-82911 | * | DECAL,CAUTION デカル | 1 | [EXE/NORWEGIAN] |
| - | 516G3-82921 | * | DECAL,CAUTION デカル | 1 | [EXE/POLISH] |
| - | 516G3-82931 | * | DECAL,CAUTION デカル | 1 | [EXE/HUNGARIAN] |
| - | 516G3-82941 | * | DECAL,CAUTION デカル | 1 | [EXE/CZECH] |
| - | 516G3-82951 | * | DECAL,CAUTION デカル | 1 | [EXE/TURKISH] |
| 15 | 534A3-82311 | * | DECAL,BATTERY,A デカル | 1 | [EXE/ENGLISH] |
| - | 534A3-82331 | * | DECAL,BATTERY,A デカル | 1 | [EXE/SPANISH] |
| - | 534A3-82341 | * | DECAL,BATTERY,A デカル | 1 | [EXE/FRENCH] |
| - | 534A3-82321 | * | DECAL,BATTERY,A デカル | 1 | [EXE/GERMAN] |
| - | 534A3-82351 | * | DECAL,BATTERY,A デカル | 1 | [EXE/DUTCH] |
| - | 534A3-82361 | * | DECAL,BATTERY,A デカル | 1 | [EXE/DANISH] |
| - | 534A3-82371 | * | DECAL,BATTERY,A デカル | 1 | [EXE/ITALIAN] |
| - | 534A3-82381 | * | DECAL,BATTERY,A デカル | 1 | [EXE/GREEK] |
| - | 534A3-82391 | * | DECAL,BATTERY,A デカル | 1 | [EXE/PORTUGUESE] |
| - | 534A3-82701 | * | DECAL,BATTERY,A デカル | 1 | [EXE/NORWEGIAN] |
| - | 534A3-82711 | * | DECAL,BATTERY,A デカル | 1 | [EXE/POLISH] |
| - | 534A3-82721 | * | DECAL,BATTERY,A デカル | 1 | [EXE/HUNGARIAN] |
| - | 534A3-82731 | * | DECAL,BATTERY,A デカル | 1 | [EXE/CZECH] |
| - | 534A3-82741 | * | DECAL,BATTERY,A デカル | 1 | [EXE/TURKISH] |
| 16 | 534A3-82421 | * | DECAL,BATTERY,B デカル | 1 | [EXE/ENGLISH] |
| - | 534A3-82441 | * | DECAL,BATTERY,B デカル | 1 | [EXE/SPANISH] |
| - | 534A3-82451 | * | DECAL,BATTERY,B デカル | 1 | [EXE/FRENCH] |
| - | 534A3-82431 | * | DECAL,BATTERY,B デカル | 1 | [EXE/GERMAN] |
| - | 534A3-82461 | * | DECAL,BATTERY,B デカル | 1 | [EXE/DUTCH] |
| - | 534A3-82471 | * | DECAL,BATTERY,B デカル | 1 | [EXE/DANISH] |
| - | 534A3-82481 | * | DECAL,BATTERY,B デカル | 1 | [EXE/ITALIAN] |
| - | 534A3-82491 | * | DECAL,BATTERY,B デカル | 1 | [EXE/GREEK] |
| - | 534A3-82501 | * | DECAL,BATTERY,B デカル | 1 | [EXE/PORTUGUESE] |
| - | 534A3-82541 | * | DECAL,BATTERY,B デカル | 1 | [EXE/NORWEGIAN] |
| - | 534A3-82551 | * | DECAL,BATTERY,B デカル | 1 | [EXE/POLISH] |
| - | 534A3-82561 | * | DECAL,BATTERY,B デカル | 1 | [EXE/HUNGARIAN] |
| - | 534A3-82571 | * | DECAL,BATTERY,B デカル | 1 | [EXE/CZECH] |
| - | 534A3-82581 | * | DECAL,BATTERY,B デカル | 1 | [EXE/TURKISH] |
| 17 | 509K2-82251 | * | DECAL,STEERING-HOSE デカル | 1 | [EXE/ENGLISH] |
| - | 509K3-83011 | * | DECAL,STEERING-HOSE デカル | 1 | [EXE/SPANISH] |
| - | 509K3-83021 | * | DECAL,STEERING-HOSE デカル | 1 | [EXE/FRENCH] |

# FIG.196 DECAL (2/2)[EXE]

(F70291E0) ﾃﾞｶﾙ(2/2)

**KIT**

K1 901 K2 902

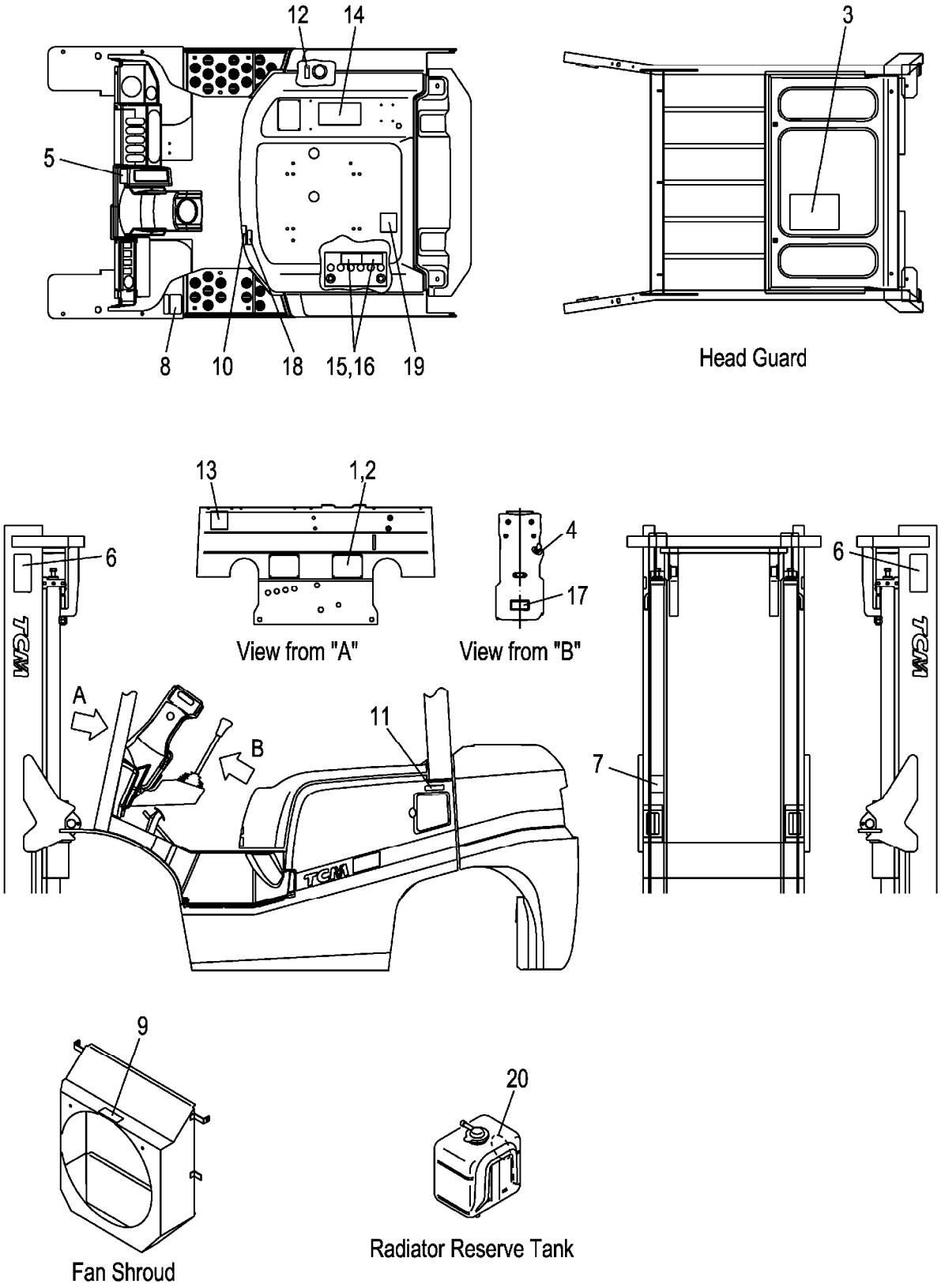

A:FG20C3 FG20T3 FG25C3 FG25T3
B:FD20C3 FD20T3 FD25C3 FD25T3

| Item No | Part No. | Mark | Description | Req'd | Remarks : Serial No. |
|---|---|---|---|---|---|
| - | 509K3-83001 | * | DECAL,STEERING-HOSE デカル | 1 | [EXE/GERMAN] |
| - | 509K3-83031 | * | DECAL,STEERING-HOSE デカル | 1 | [EXE/DUTCH] |
| - | 509K3-83041 | * | DECAL,STEERING-HOSE デカル | 1 | [EXE/DANISH] |
| - | 509K3-83051 | * | DECAL,STEERING-HOSE デカル | 1 | [EXE/ITALIAN] |
| - | 509K3-83061 | * | DECAL,STEERING-HOSE デカル | 1 | [EXE/GREEK] |
| - | 509K3-83071 | * | DECAL,STEERING-HOSE デカル | 1 | [EXE/PORTUGUESE] |
| - | 509K3-83401 | * | DECAL,STEERING-HOSE デカル | 1 | [EXE/NORWEGIAN] |
| - | 509K3-83411 | * | DECAL,STEERING-HOSE デカル | 1 | [EXE/POLISH] |
| - | 509K3-83421 | * | DECAL,STEERING-HOSE デカル | 1 | [EXE/HUNGARIAN] |
| - | 509K3-83431 | * | DECAL,STEERING-HOSE デカル | 1 | [EXE/CZECH] |
| - | 509K3-83441 | * | DECAL,STEERING-HOSE デカル | 1 | [EXE/TURKISH] |
| 18 | 52N52-72201 | * | DECAL,BONNET-CAUTION デカル | 1 | [EXE/ENGLISH] |
| - | 52N53-82301 | * | DECAL,BONNET-CAUTION デカル | 1 | [EXE/SPANISH] |
| - | 52N53-82311 | * | DECAL,BONNET-CAUTION デカル | 1 | [EXE/FRENCH] |
| - | 52N53-82321 | * | DECAL,BONNET-CAUTION デカル | 1 | [EXE/GERMAN] |
| - | 52N53-82331 | * | DECAL,BONNET-CAUTION デカル | 1 | [EXE/DUTCH] |
| - | 52N53-82341 | * | DECAL,BONNET-CAUTION デカル | 1 | [EXE/DANISH] |
| - | 52N53-82351 | * | DECAL,BONNET-CAUTION デカル | 1 | [EXE/ITALIAN] |
| - | 52N53-82361 | * | DECAL,BONNET-CAUTION デカル | 1 | [EXE/GREEK] |
| - | 52N53-82371 | * | DECAL,BONNET-CAUTION デカル | 1 | [EXE/PORTUGUESE] |
| - | 52N53-82401 | * | DECAL,BONNET-CAUTION デカル | 1 | [EXE/NORWEGIAN] |
| - | 52N53-82411 | * | DECAL,BONNET-CAUTION デカル | 1 | [EXE/POLISH] |
| - | 52N53-82421 | * | DECAL,BONNET-CAUTION デカル | 1 | [EXE/HUNGARIAN] |
| - | 52N53-82431 | * | DECAL,BONNET-CAUTION デカル | 1 | [EXE/CZECH] |
| - | 52N53-82441 | * | DECAL,BONNET-CAUTION デカル | 1 | [EXE/TURKISH] |
| 19 | 577H3-82151 | * | DECAL,GAS-SPRING デカル | 1 | [EXE/ENGLISH] |
| - | 577H3-82171 | * | DECAL,GAS-SPRING デカル | 1 | [EXE/SPANISH] |
| - | 577H3-82181 | * | DECAL,GAS-SPRING デカル | 1 | [EXE/FRENCH] |
| - | 577H3-82161 | * | DECAL,GAS-SPRING デカル | 1 | [EXE/GERMAN] |
| - | 577H3-82191 | * | DECAL,GAS-SPRING デカル | 1 | [EXE/DUTCH] |
| - | 577H3-82201 | * | DECAL,GAS-SPRING デカル | 1 | [EXE/DANISH] |
| - | 577H3-82211 | * | DECAL,GAS-SPRING デカル | 1 | [EXE/ITALIAN] |
| - | 577H3-82221 | * | DECAL,GAS-SPRING デカル | 1 | [EXE/GREEK] |
| - | 577H3-82231 | * | DECAL,GAS-SPRING デカル | 1 | [EXE/PORTUGUESE] |
| - | 577H3-82261 | * | DECAL,GAS-SPRING デカル | 1 | [EXE/NORWEGIAN] |
| - | 577H3-82701 | * | DECAL,GAS-SPRING デカル | 1 | [EXE/POLISH] |
| - | 577H3-82711 | * | DECAL,GAS-SPRING デカル | 1 | [EXE/HUNGARIAN] |
| - | 577H3-82721 | * | DECAL,GAS-SPRING デカル | 1 | [EXE/CZECH] |
| - | 577H3-82731 | * | DECAL,GAS-SPRING デカル | 1 | [EXE/TURKISH] |
| 20 | 23659-12101 | * | DECAL,LIFE-COOLANT デカル | 1 | [EXE/ENGLISH] |
| - | 522A3-82641 | * | DECAL,LIFE-COOLANT デカル | 1 | [EXE/SPANISH] |
| - | 522A3-82841 | * | DECAL,LIFE-COOLANT デカル | 1 | [EXE/FRENCH] |
| - | 522A3-82441 | * | DECAL,LIFE-COOLANT デカル | 1 | [EXE/GERMAN] |
| - | 522A3-83041 | * | DECAL,LIFE-COOLANT デカル | 1 | [EXE/DUTCH] |
| - | 522A3-83241 | * | DECAL,LIFE-COOLANT デカル | 1 | [EXE/DANISH] |
| - | 522A3-83441 | * | DECAL,LIFE-COOLANT デカル | 1 | [EXE/ITALIAN] |
| - | 522A3-83641 | * | DECAL,LIFE-COOLANT デカル | 1 | [EXE/GREEK] |
| - | 522A3-83841 | * | DECAL,LIFE-COOLANT デカル | 1 | [EXE/PORTUGUESE] |
| - | 529F3-82151 | * | DECAL,LIFE-COOLANT デカル | 1 | [EXE/NORWEGIAN] |
| - | 529F3-82801 | * | DECAL,LIFE-COOLANT デカル | 1 | [EXE/POLISH] |

# FIG.196 DECAL (2/2)[EXE]

(F70291E0) ﾃﾞｶﾙ(2/2)

**KIT**

K1 901 K2 902

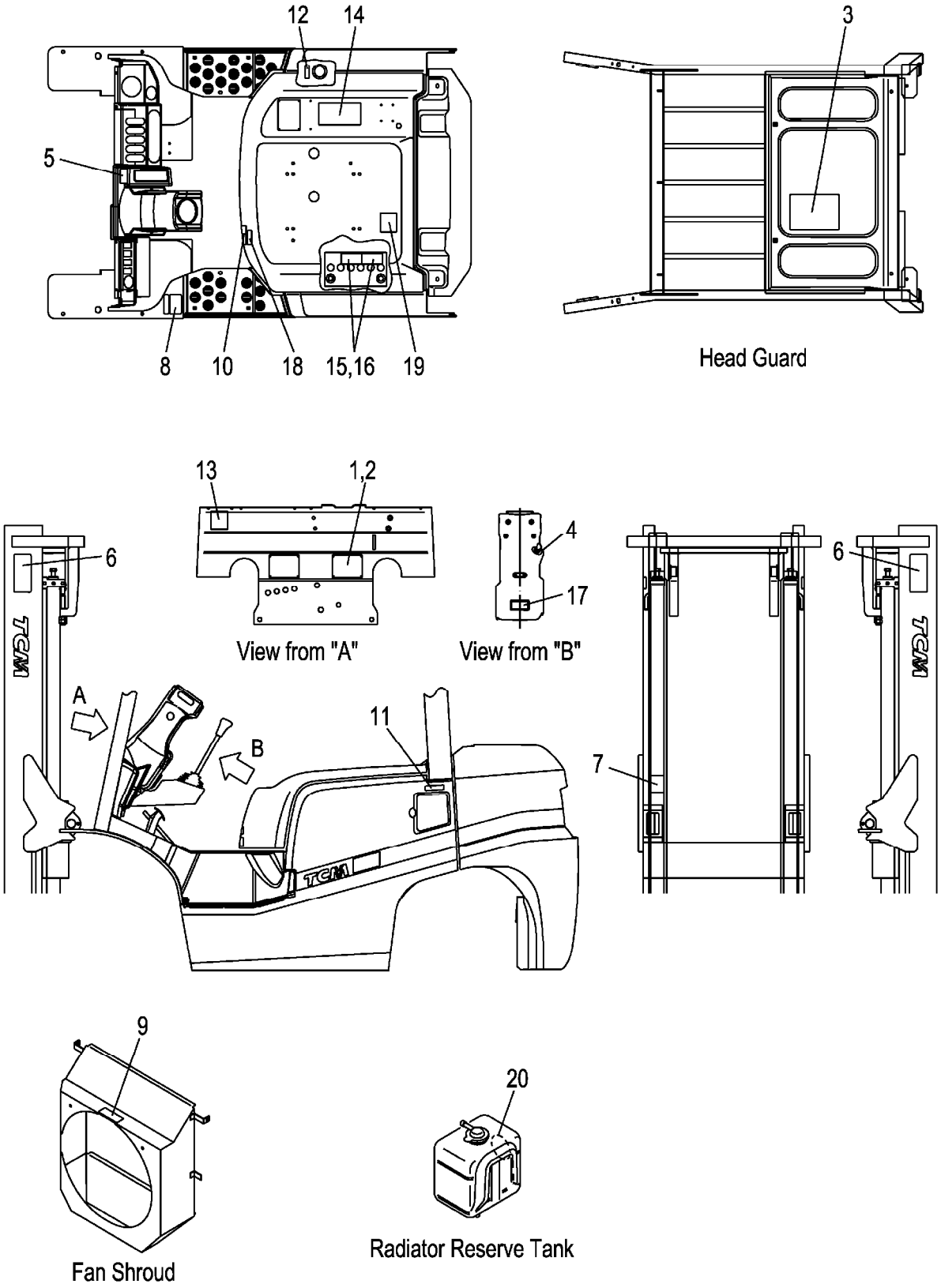

A:FG20C3 FG20T3 FG25C3 FG25T3
B:FD20C3 FD20T3 FD25C3 FD25T3

| Item No | Part No. | Mark | Description | Req'd | Remarks : Serial No. |
|---|---|---|---|---|---|
| - | 529F3-82811 | * | DECAL,LIFE-COOLANT デカル | 1 | [EXE/HUNGARIAN] |
| - | 529F3-82821 | * | DECAL,LIFE-COOLANT デカル | 1 | [EXE/CZECH] |
| - | 529F3-82831 | * | DECAL,LIFE-COOLANT デカル | 1 | [EXE/TURKISH] |

# M E M O

# M E M O

# FIG.197 DECAL (2/2)[EXK]

(F70291K0) ﾃﾞｶﾙ(2/2)

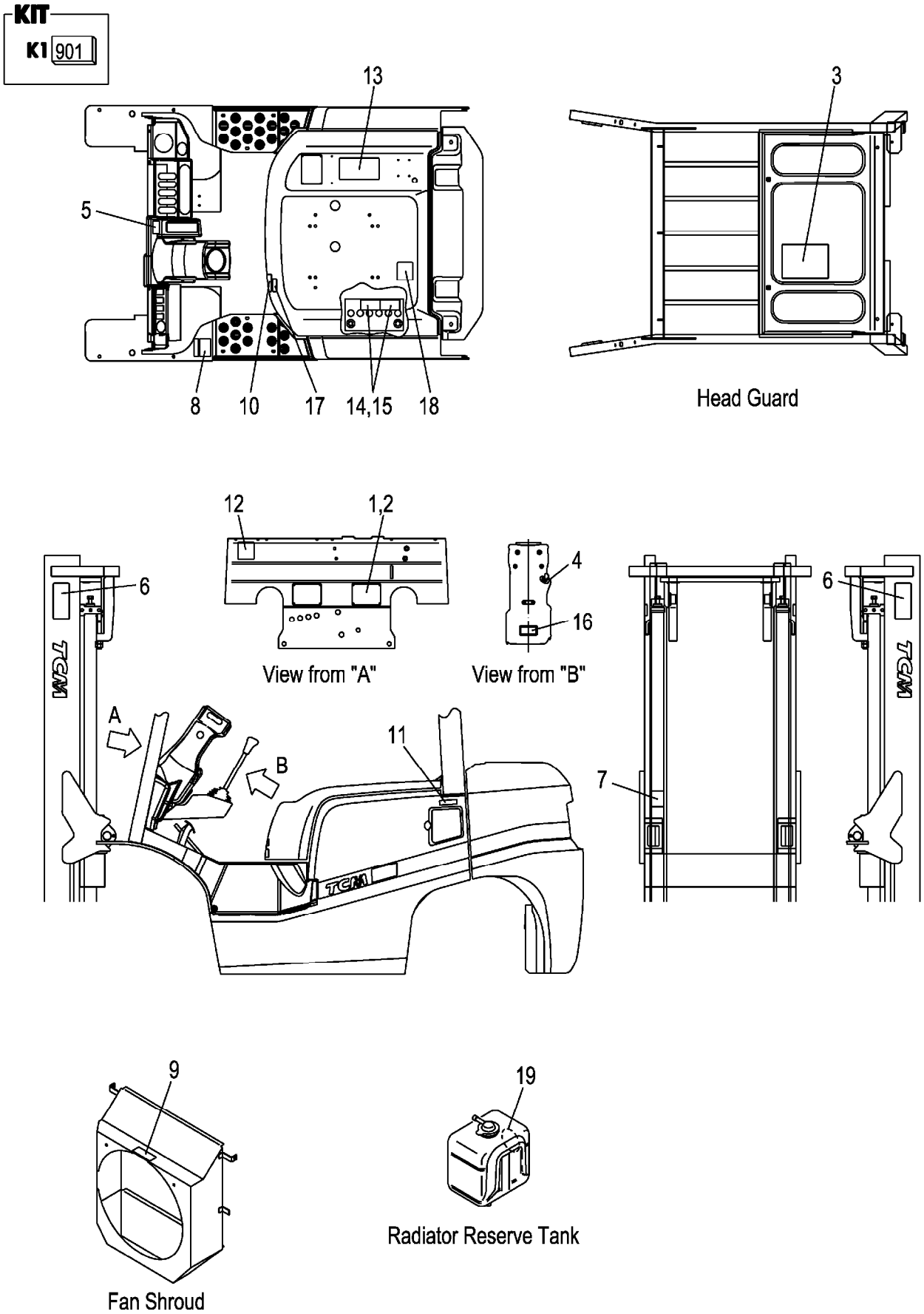

A:FG20C3 FG20T3 FG25C3 FG25T3
B:FD20C3 FD20T3 FD25C3 FD25T3

| Item No | Part No. | Mark | Description | | Req'd | Remarks : Serial No. |
|---|---|---|---|---|---|---|
| 901 | C-11452-2B0-E | K1 | KIT,DECAL,ENGLISH | ﾃﾞｶﾙｷｯﾄ | 1 | A |
| | | | | | | [EXK] INC.3-19,FIG.192:8,9 |
| - | C-11452-2N0-E | K1 | KIT,DECAL,ENGLISH | ﾃﾞｶﾙｷｯﾄ | 1 | B |
| | | | | | | [EXK] INC.3-19,FIG.192:8,9 |
| 1 | NO PART NO. | # | PLATE,NAME | ﾌﾟﾚｰﾄ | 1 | [EXK] |
| 2 | 216G9-12131 | | RIVET | ﾘﾍﾞｯﾄ | 4 | [EXK] |
| 3 | 52N52-72101 | * | CHART,LUBRICATION | ﾁｬｰﾄ | 1 | [EXK] |
| 4 | 216G9-12071 | * | DECAL,STARTER-SWITCH | ﾃﾞｶﾙ | 1 | [EXK] |
| 5 | 514A3-82002 | * | DECAL,BRAKE-LEVER | ﾃﾞｶﾙ | 1 | [EXK] |
| 6 | 27419-12061 | * | DECAL,MAST-CAUTION | ﾃﾞｶﾙ | 2 | [EXK] |
| 7 | 27419-12071 | * | DECAL,CROSS-BEAM | ﾃﾞｶﾙ | 1 | [EXK] |
| 8 | 516G2-72711 | * | DECAL,TIRE-CAUTION | ﾃﾞｶﾙ | 1 | [EXK] |
| 9 | 516G2-72701 | * | DECAL,FAN-CAUTION | ﾃﾞｶﾙ | 1 | [EXK] |
| 10 | 536G2-82181 | * | DECAL,FUEL-CAPACITY | ﾃﾞｶﾙ | 1 | [EXK] |
| 11 | 51232-82001 | * | DECAL,GASOLINE | ﾃﾞｶﾙ | 1 | A |
| | | | | | | [EXK] |
| - | 509K3-82681 | * | DECAL,LIGHT-OIL | ﾃﾞｶﾙ | 1 | B |
| | | | | | | [EXK] |
| 12 | 571A3-82361 | * | DECAL,CAUTION | ﾃﾞｶﾙ | 1 | [EXK] |
| 13 | 516G3-82801 | * | DECAL,CAUTION | ﾃﾞｶﾙ | 1 | [EXK] |
| 14 | 534A3-82311 | * | DECAL,BATTERY,A | ﾃﾞｶﾙ | 1 | [EXK] |
| 15 | 534A3-82421 | * | DECAL,BATTERY,B | ﾃﾞｶﾙ | 1 | [EXK] |
| 16 | 509K2-82251 | * | DECAL,STEERING-HOSE | ﾃﾞｶﾙ | 1 | [EXK] |
| 17 | 52N52-72201 | * | DECAL,BONNET-CAUTION | ﾃﾞｶﾙ | 1 | [EXK] |
| 18 | 577H3-82151 | * | DECAL,GAS-SPRING | ﾃﾞｶﾙ | 1 | [EXK] |
| 19 | 23659-12101 | * | DECAL,LIFE-COOLANT | ﾃﾞｶﾙ | 1 | [EXK] |

# FIG.198 DECAL (2/2)[EXN]

(F70291N0) ﾃﾞｶﾙ(2/2)

**KIT**

| K1 | K2 |
|---|---|
| 901 | 902 |

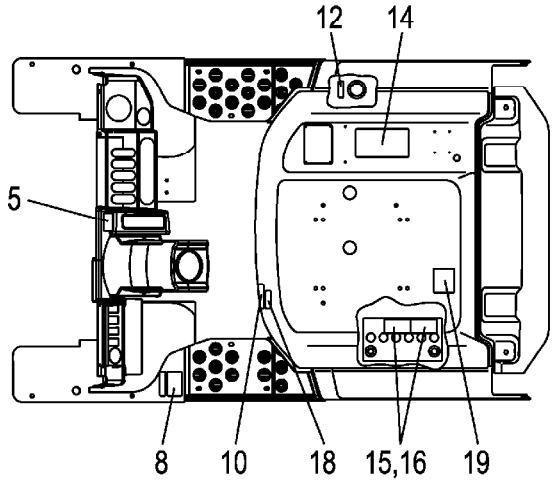


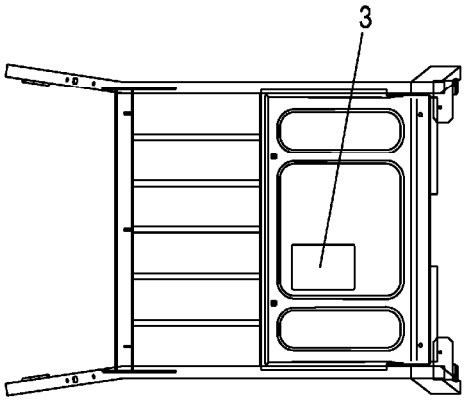


Head Guard

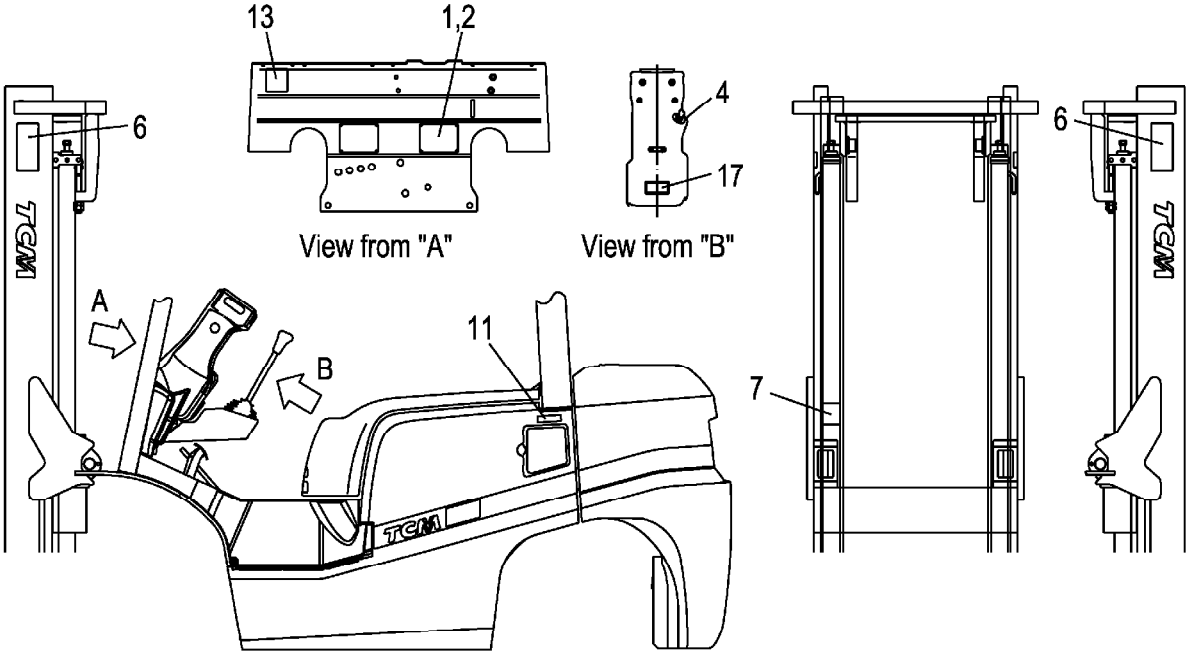


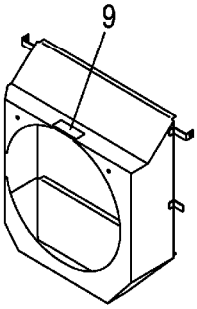


Fan Shroud

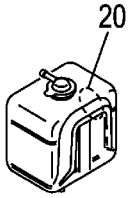


Radiator Reserve Tank

A:FG20C3 FG20T3 FG25C3 FG25T3
B:FD20C3 FD20T3 FD25C3 FD25T3

| Item No | Part No. | Mark | Description | | Req'd | Remarks : Serial No. |
|---|---|---|---|---|---|---|
| 901 | C-11452-2B0-E | K1 | KIT,DECAL,ENGLISH | ﾃﾞｶﾙｷｯﾄ | 1 | A<br>[EXN/ENGLISH]<br>INC.3-11,13-20,FIG.192:8,9 |
| - | C-11452-2N0-E | K1 | KIT,DECAL,ENGLISH | ﾃﾞｶﾙｷｯﾄ | 1 | B<br>[EXN/ENGLISH]<br>INC.3-11,13-20,FIG.192:8,9 |
| 902 | C-11452-2B0-DN | K2 | KIT,DECAL,DANISH | ﾃﾞｶﾙｷｯﾄ | 1 | A<br>[EXN/DANISH]<br>INC.3-20,FIG.192:8,9 |
| - | C-11452-2N0-DN | K2 | KIT,DECAL,DANISH | ﾃﾞｶﾙｷｯﾄ | 1 | B<br>[EXN/DANISH]<br>INC.3-20,FIG.192:8,9 |
| - | C-11452-2B0-SW | K2 | KIT,DECAL,SWEDISH | ﾃﾞｶﾙｷｯﾄ | 1 | A<br>[EXN/SWEDISH]<br>INC.3-20,FIG.192:8,9 |
| - | C-11452-2N0-SW | K2 | KIT,DECAL,SWEDISH | ﾃﾞｶﾙｷｯﾄ | 1 | B<br>[EXN/SWEDISH]<br>INC.3-20,FIG.192:8,9 |
| - | C-11452-2B0-FI | K2 | KIT,DECAL,FINNISH | ﾃﾞｶﾙｷｯﾄ | 1 | A<br>[EXN/FINNISH]<br>INC.3-20,FIG.192:8,9 |
| - | C-11452-2N0-FI | K2 | KIT,DECAL,FINNISH | ﾃﾞｶﾙｷｯﾄ | 1 | B<br>[EXN/FINNISH]<br>INC.3-20,FIG.192:8,9 |
| 1 | NO PART NO. | # | PLATE,NAME | ﾌﾟﾚｰﾄ | 1 | [EXN/ENGLISH] |
| - | NO PART NO. | # | PLATE,NAME | ﾌﾟﾚｰﾄ | 1 | [EXN/DANISH] |
| - | NO PART NO. | # | PLATE,NAME | ﾌﾟﾚｰﾄ | 1 | [EXN/SWEDISH] |
| - | NO PART NO. | # | PLATE,NAME | ﾌﾟﾚｰﾄ | 1 | [EXN/FINNISH] |
| 2 | 216G9-12131 | | RIVET | ﾘﾍﾞｯﾄ | 4 | [EXN] |
| 3 | 52N52-72101 | * | CHART,LUBRICATION | ﾁｬｰﾄ | 1 | [EXN/ENGLISH] |
| - | 52N53-82141 | * | CHART,LUBRICATION | ﾁｬｰﾄ | 1 | [EXN/DANISH] |
| - | 52N53-82191 | * | CHART,LUBRICATION | ﾁｬｰﾄ | 1 | [EXN/SWEDISH] |
| - | 52N53-82181 | * | CHART,LUBRICATION | ﾁｬｰﾄ | 1 | [EXN/FINNISH] |
| 4 | 216G9-12071 | * | DECAL,STARTER-SWITCH | ﾃﾞｶﾙ | 1 | [EXN/ENGLISH] |
| - | 516G3-82031 | * | DECAL,STARTER-SWITCH | ﾃﾞｶﾙ | 1 | [EXN/DANISH] |
| - | 516G3-82071 | * | DECAL,STARTER-SWITCH | ﾃﾞｶﾙ | 1 | [EXN/SWEDISH] |
| - | 516G3-82061 | * | DECAL,STARTER-SWITCH | ﾃﾞｶﾙ | 1 | [EXN/FINNISH] |
| 5 | 514A3-82002 | * | DECAL,BRAKE-LEVER | ﾃﾞｶﾙ | 1 | [EXN/ENGLISH] |
| - | 514A3-82042 | * | DECAL,BRAKE-LEVER | ﾃﾞｶﾙ | 1 | [EXN/DANISH] |
| - | 529F3-82252 | * | DECAL,BRAKE-LEVER | ﾃﾞｶﾙ | 1 | [EXN/SWEDISH] |
| - | 529F3-82242 | * | DECAL,BRAKE-LEVER | ﾃﾞｶﾙ | 1 | [EXN/FINNISH] |
| 6 | 27419-12061 | * | DECAL,MAST-CAUTION | ﾃﾞｶﾙ | 2 | [EXN] |
| 7 | 27419-12071 | * | DECAL,CROSS-BEAM | ﾃﾞｶﾙ | 1 | [EXN] |
| 8 | 516G2-72711 | * | DECAL,TIRE-CAUTION | ﾃﾞｶﾙ | 1 | [EXN/ENGLISH] |
| - | 516G3-82241 | * | DECAL,TIRE-CAUTION | ﾃﾞｶﾙ | 1 | [EXN/DANISH] |
| - | 516G3-82291 | * | DECAL,TIRE-CAUTION | ﾃﾞｶﾙ | 1 | [EXN/SWEDISH] |
| - | 516G3-82281 | * | DECAL,TIRE-CAUTION | ﾃﾞｶﾙ | 1 | [EXN/FINNISH] |
| 9 | 516G2-72701 | * | DECAL,FAN-CAUTION | ﾃﾞｶﾙ | 1 | [EXN/ENGLISH] |
| - | 516G3-82141 | * | DECAL,FAN-CAUTION | ﾃﾞｶﾙ | 1 | [EXN/DANISH] |
| - | 516G3-82191 | * | DECAL,FAN-CAUTION | ﾃﾞｶﾙ | 1 | [EXN/SWEDISH] |

# FIG.198 DECAL (2/2)[EXN]

(F70291N0) ﾃﾞｶﾙ(2/2)

**KIT**

| K1 | K2 |
|---|---|
| 901 | 902 |

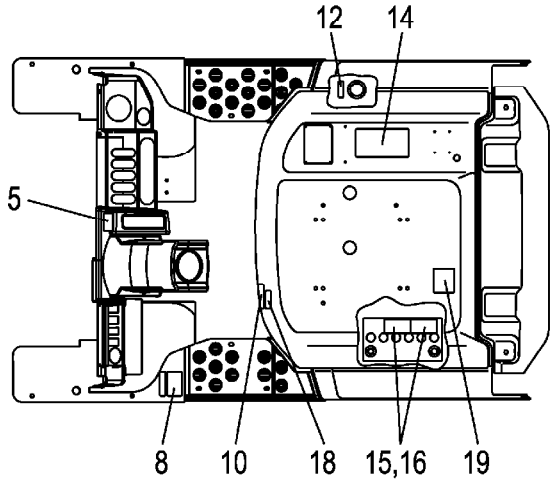


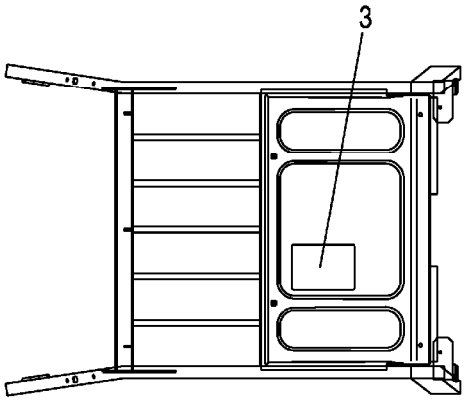


Head Guard

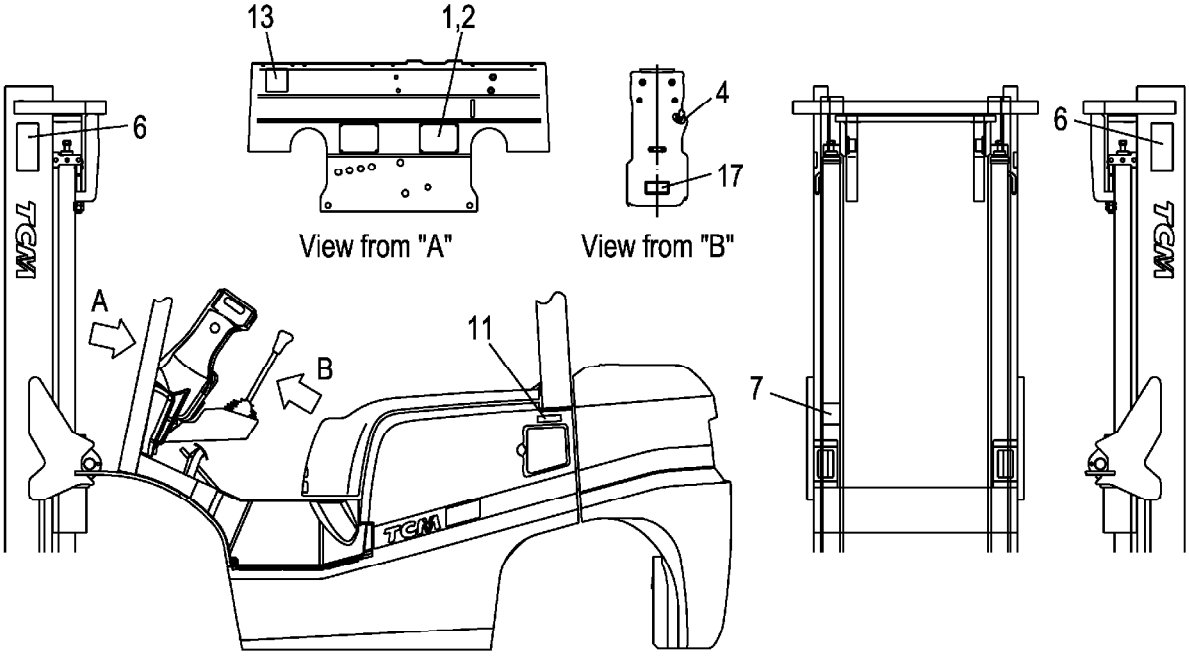


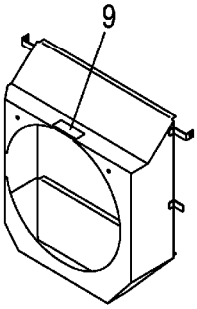


Fan Shroud

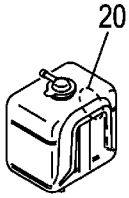


Radiator Reserve Tank

A:FG20C3 FG20T3 FG25C3 FG25T3
B:FD20C3 FD20T3 FD25C3 FD25T3

| Item No | Part No. | Mark | Description | Req'd | Remarks : Serial No. |
|---|---|---|---|---|---|
| - | 516G3-82181 | * | DECAL,FAN-CAUTION デカル | 1 | [EXN/FINNISH] |
| 10 | 536G2-82181 | * | DECAL,FUEL-CAPACITY デカル | 1 | [EXN/ENGLISH] |
| - | 536G3-82041 | * | DECAL,FUEL-CAPACITY デカル | 1 | [EXN/DANISH] |
| - | 536G3-82091 | * | DECAL,FUEL-CAPACITY デカル | 1 | [EXN/SWEDISH] |
| - | 536G3-82081 | * | DECAL,FUEL-CAPACITY デカル | 1 | [EXN/FINNISH] |
| 11 | 51232-82001 | * | DECAL,GASOLINE デカル | 1 | A [EXN/ENGLISH] |
| - | 509K3-82681 | * | DECAL,LIGHT-OIL デカル | 1 | B [EXN/ENGLISH] |
| - | 51233-83221 | * | DECAL,GASOLINE デカル | 1 | A [EXN/DANISH] |
| - | 509K3-82841 | * | DECAL,LIGHT-OIL デカル | 1 | B [EXN/DANISH] |
| - | 528F3-82031 | * | DECAL,GASOLINE デカル | 1 | A [EXN/SWEDISH] |
| - | 509K3-82891 | * | DECAL,LIGHT-OIL デカル | 1 | B [EXN/SWEDISH] |
| - | 528F3-82021 | * | DECAL,GASOLINE デカル | 1 | A [EXN/FINNISH] |
| - | 509K3-82881 | * | DECAL,LIGHT-OIL デカル | 1 | B [EXN/FINNISH] |
| 12 | 522A3-83061 | * | DECAL,OIL デカル | 1 | [EXN/DANISH] |
| - | 529F3-82071 | * | DECAL,OIL デカル | 1 | [EXN/SWEDISH] |
| - | 529F3-82061 | * | DECAL,OIL デカル | 1 | [EXN/FINNISH] |
| 13 | 571A3-82361 | * | DECAL,CAUTION デカル | 1 | [EXN] |
| 14 | 516G3-82801 | * | DECAL,CAUTION デカル | 1 | [EXN/ENGLISH] |
| - | 516G3-82851 | * | DECAL,CAUTION デカル | 1 | [EXN/DANISH] |
| - | 516G3-82891 | * | DECAL,CAUTION デカル | 1 | [EXN/SWEDISH] |
| - | 516G3-82901 | * | DECAL,CAUTION デカル | 1 | [EXN/FINNISH] |
| 15 | 534A3-82311 | * | DECAL,BATTERY,A デカル | 1 | [EXN/ENGLISH] |
| - | 534A3-82361 | * | DECAL,BATTERY,A デカル | 1 | [EXN/DANISH] |
| - | 534A3-82411 | * | DECAL,BATTERY,A デカル | 1 | [EXN/SWEDISH] |
| - | 534A3-82401 | * | DECAL,BATTERY,A デカル | 1 | [EXN/FINNISH] |
| 16 | 534A3-82421 | * | DECAL,BATTERY,B デカル | 1 | [EXN/ENGLISH] |
| - | 534A3-82471 | * | DECAL,BATTERY,B デカル | 1 | [EXN/DANISH] |
| - | 534A3-82521 | * | DECAL,BATTERY,B デカル | 1 | [EXN/SWEDISH] |
| - | 534A3-82511 | * | DECAL,BATTERY,B デカル | 1 | [EXN/FINNISH] |
| 17 | 509K2-82251 | * | DECAL,STEERING-HOSE デカル | 1 | [EXE/ENGLISH] |
| - | 509K3-83041 | * | DECAL,STEERING-HOSE デカル | 1 | [EXE/DANISH] |
| - | 509K3-83091 | * | DECAL,STEERING-HOSE デカル | 1 | [EXN/SWEDISH] |
| - | 509K3-83081 | * | DECAL,STEERING-HOSE デカル | 1 | [EXN/FINNISH] |
| 18 | 52N52-72201 | * | DECAL,BONNET-CAUTION デカル | 1 | [EXE/ENGLISH] |
| - | 52N53-82341 | * | DECAL,BONNET-CAUTION デカル | 1 | [EXE/DANISH] |
| - | 52N53-82391 | * | DECAL,BONNET-CAUTION デカル | 1 | [EXN/SWEDISH] |
| - | 52N53-82381 | * | DECAL,BONNET-CAUTION デカル | 1 | [EXN/FINNISH] |
| 19 | 577H3-82151 | * | DECAL,GAS-SPRING デカル | 1 | [EXE/ENGLISH] |
| - | 577H3-82201 | * | DECAL,GAS-SPRING デカル | 1 | [EXE/DANISH] |
| - | 577H3-82251 | * | DECAL,GAS-SPRING デカル | 1 | [EXN/SWEDISH] |
| - | 577H3-82241 | * | DECAL,GAS-SPRING デカル | 1 | [EXN/FINNISH] |
| 20 | 23659-12101 | * | DECAL,LIFE-COOLANT デカル | 1 | [EXE/ENGLISH] |

# FIG.198 DECAL (2/2)[EXN]

(F70291N0) ﾃﾞｶﾙ(2/2)

**KIT**

| K1 | K2 |
|---|---|
| 901 | 902 |

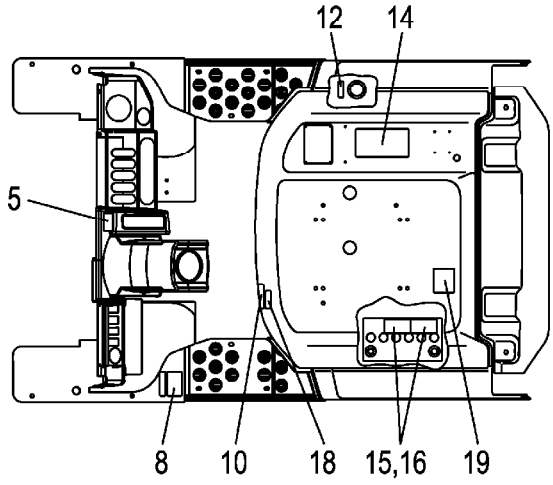


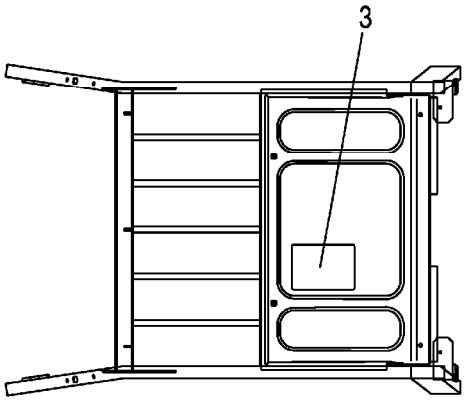


Head Guard

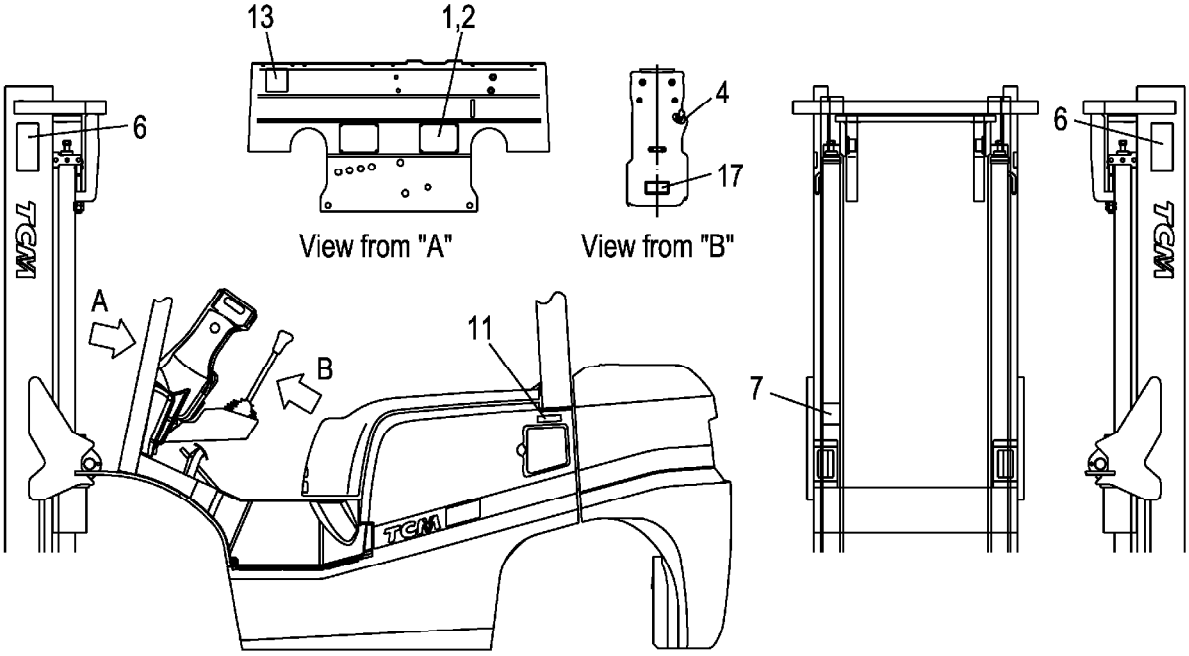


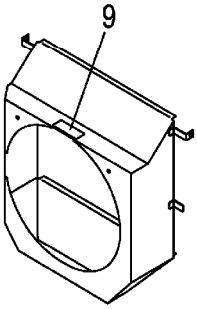


Fan Shroud

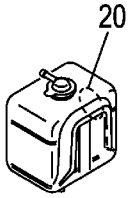


Radiator Reserve Tank

A:FG20C3 FG20T3 FG25C3 FG25T3
B:FD20C3 FD20T3 FD25C3 FD25T3

| Item No | Part No. | Mark | Description | Req'd | Remarks : Serial No. |
|---|---|---|---|---|---|
| - | 522A3-83241 | * | DECAL,LIFE-COOLANT デカル | 1 | [EXE/DANISH] |
| - | 529F3-82091 | * | DECAL,LIFE-COOLANT デカル | 1 | [EXN/SWEDISH] |
| - | 529F3-82081 | * | DECAL,LIFE-COOLANT デカル | 1 | [EXN/FINNISH] |

# FIG.199 SERVICE TOOL [TO][EX]

(F7029210) サービスツール

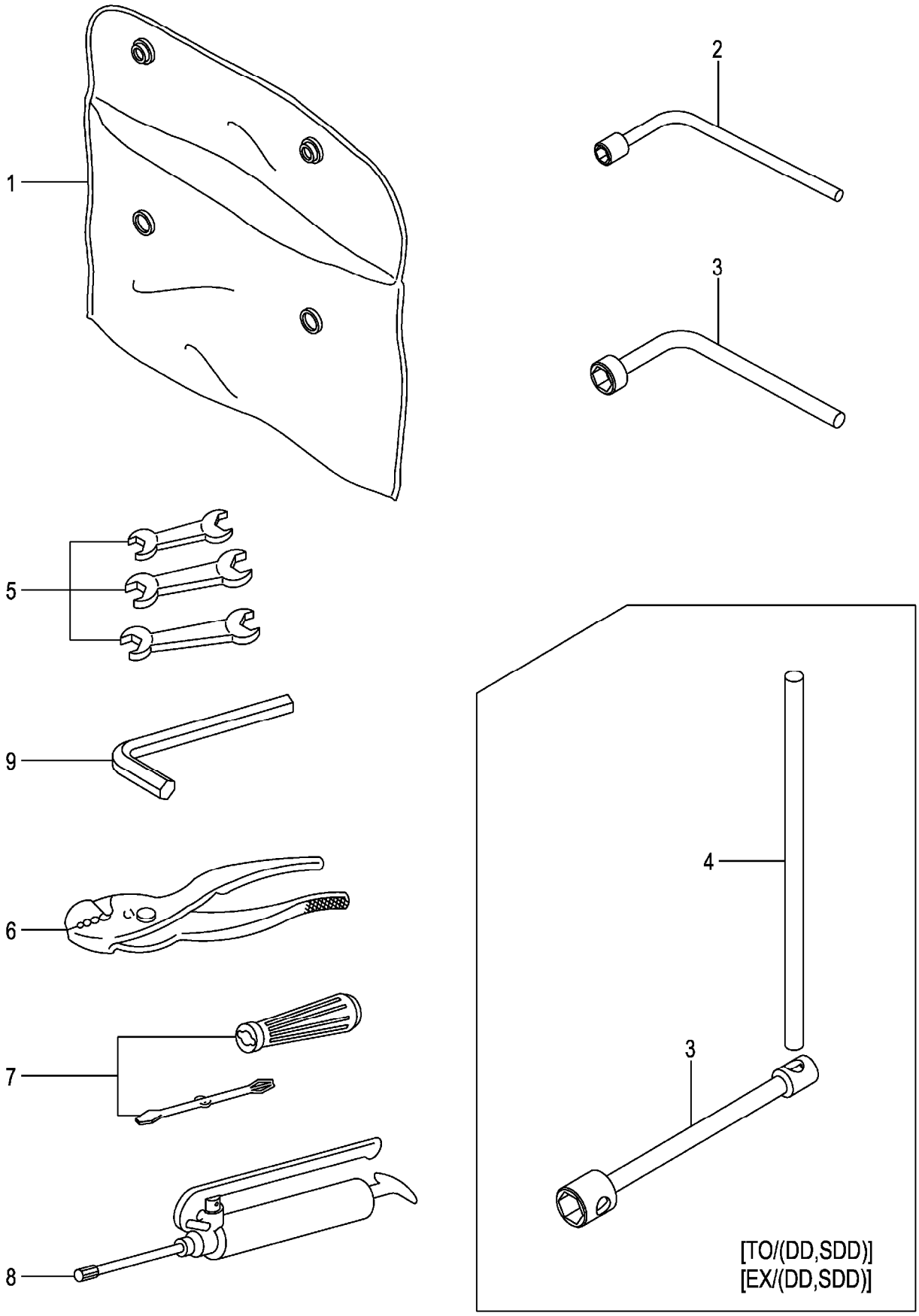

A:FG20C13 FG20T13 FG25C13 FG25T13 D:FD20C13 FD20T13 FD25C13 FD25T13
B:FG20C3 FG20T3 FG25C3 FG25T3 E:FD20C3 FD20T3 FD25C3 FD25T3
C:FG20W3 FG25W3 F:FD20W3 FD25W3

**FIG.199**
(F7029210)

| Item No | Part No. | Mark | Description | | Req'd | Remarks : Serial No. |
|---|---|---|---|---|---|---|
| 1 | 214A9-20101 | | SACK,SERVICE-TOOLS | ｻｯｸ | 1 | [TO] |
| - | 214A9-20101 | | SACK,SERVICE-TOOLS | ｻｯｸ | 1 | B,E |
| | | | | | | [EX] |
| 2 | 22199-22251 | | WRENCH,HUB-NUT,21MM | ﾚﾝﾁ | 1 | [TO](REAR) |
| - | 22199-22251 | | WRENCH,HUB-NUT,21MM | ﾚﾝﾁ | 1 | B,E |
| | | | | | | [EX](REAR) |
| 3 | 25599-22001 | | WRENCH,HUB-NUT,32MM | ﾚﾝﾁ | 1 | [TO](FRONT) |
| - | 25599-22001 | | WRENCH,HUB-NUT,32MM | ﾚﾝﾁ | 1 | B,E |
| | | | | | | [EX](FRONT) |
| - | 23819-20011 | | WRENCH,HUB-NUT,41MM | ﾚﾝﾁ | 1 | [TO/DD][TO/SDD](FRONT) |
| - | 23819-20011 | | WRENCH,HUB-NUT,41MM | ﾚﾝﾁ | 1 | B,E |
| | | | | | | [EX/DD][EX/SDD](FRONT) |
| 4 | 23819-20021 | | LEVER,WRENCH,HUB-NUT | ﾚﾊﾞｰ | 1 | [TO/DD][TO/SDD] |
| - | 23819-20021 | | LEVER,WRENCH,HUB-NUT | ﾚﾊﾞｰ | 1 | B,E |
| | | | | | | [EX/DD][EX/SDD] |
| 5 | 25599-22051 | | SET,SPANNER | ｽﾊﾟﾅｾｯﾄ | 1 | [TO] |
| - | 25599-22051 | | SET,SPANNER | ｽﾊﾟﾅｾｯﾄ | 1 | B,E |
| | | | | | | [EX] |
| 6 | 23019-20011 | | PLIER,150MM | ﾌﾟﾗｲﾔ | 1 | [TO] |
| - | 23019-20011 | | PLIER,150MM | ﾌﾟﾗｲﾔ | 1 | B,E |
| | | | | | | [EX] |
| 7 | 22199-22261 | | SET,DRIVER | ﾄﾞﾗｲﾊﾞｾｯﾄ | 1 | [TO] |
| - | 22199-22261 | | SET,DRIVER | ﾄﾞﾗｲﾊﾞｾｯﾄ | 1 | B,E |
| | | | | | | [EX] |
| 8 | 22199-22001 | | GUN,GREASE | ｶﾞﾝ | 1 | [TO] |
| - | 22199-22001 | | GUN,GREASE | ｶﾞﾝ | 1 | B,E |
| | | | | | | [EX] |
| 9 | 25599-22061 | | WRENCH,HEXAGON | ﾚﾝﾁ | 1 | [TO] |
| - | 25599-22061 | | WRENCH,HEXAGON | ﾚﾝﾁ | 1 | B,E |
| | | | | | | [EX] |

# FIG.200 FORK [VM2N5]

(M7028110) フォーク

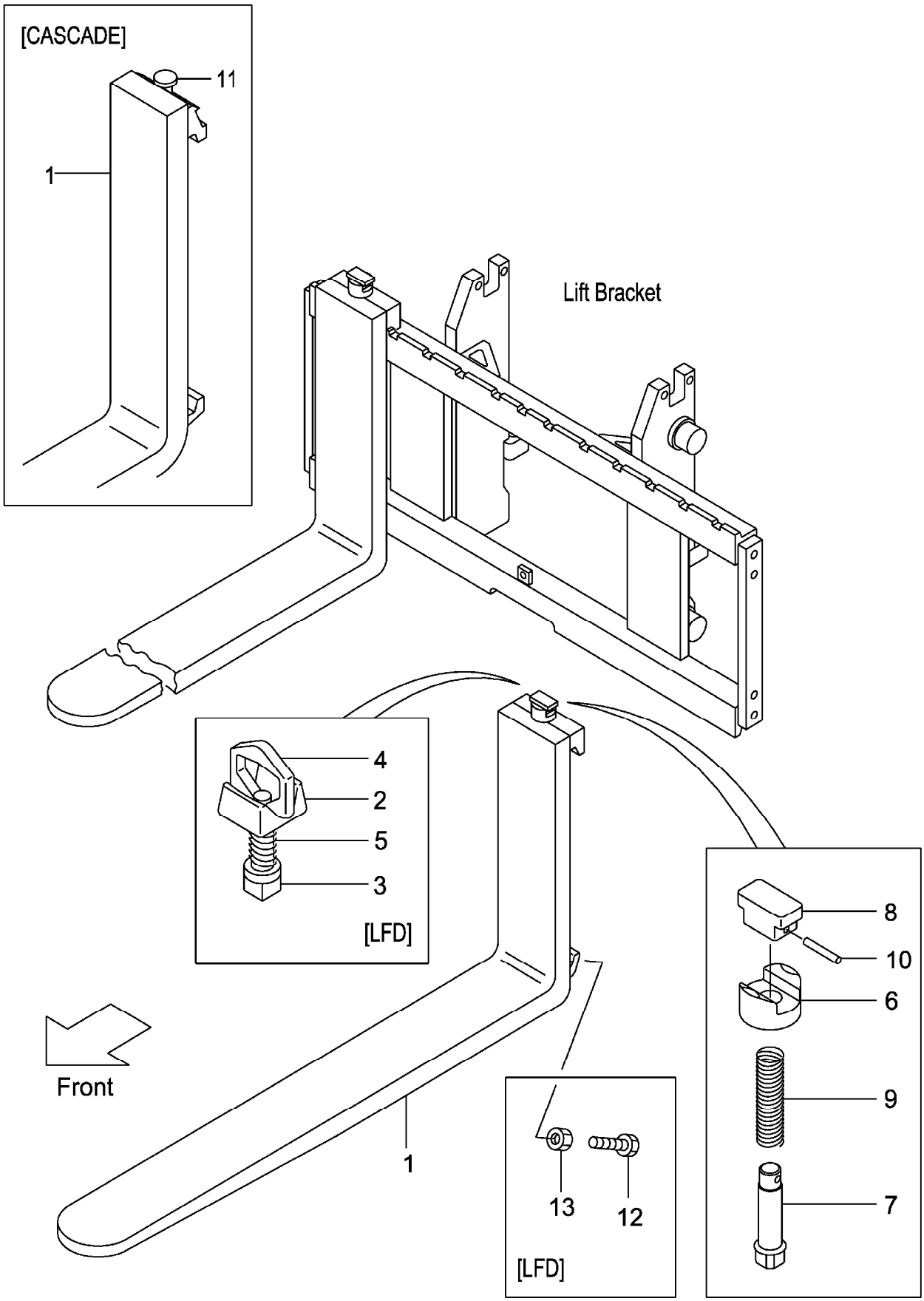

A:VM2N5(FG20C13-FD20T13) C:VM2N5(F(H)G20C3-F(H)D20W3)
B:VM2N5(FG25C13-FD25T13) D:VM2N5(F(H)G25C3-F(H)D25W3)

| Item No | Part No. | Mark | Description | Req'd | Remarks : Serial No. |
|---|---|---|---|---|---|
| 1 | 231A8-10101 | | FORK フォーク | 2 | A,C<br>(L=920) INC.6-10 |
| - | 214A8-10512 | | FORK フォーク | 2 | B,D<br>(L=1070) INC.6-10 |
| - | 231A8-10171 | | FORK フォーク | 2 | A,C<br>[LF090] INC.6-10 |
| - | 231F8-10571 | | FORK フォーク | 2 | B,D<br>[LF090] INC.6-10 |
| - | 231A8-10101 | | FORK フォーク | 2 | A,C<br>[LF092] INC.6-10 |
| - | 231F8-10501 | | FORK フォーク | 2 | B,D<br>[LF092] INC.6-10 |
| - | 214A8-10582 | | FORK フォーク | 2 | [LF100] INC.6-10 |
| - | 214A8-10512 | | FORK フォーク | 2 | [LF107][EX] INC.6-10 |
| - | 214A8-10592 | | FORK フォーク | 2 | [LF110] INC.6-10 |
| - | 214A8-10602 | | FORK フォーク | 2 | [LF120] INC.6-10 |
| - | 214A8-10522 | | FORK フォーク | 2 | [LF122] INC.6-10 |
| - | 214A8-10612 | | FORK フォーク | 2 | [LF130] INC.6-10 |
| - | 214A8-10532 | | FORK フォーク | 2 | [LF137] INC.6-10 |
| - | 214A8-10622 | | FORK フォーク | 2 | [LF140] INC.6-10 |
| - | 214A8-10632 | | FORK フォーク | 2 | [LF150] INC.6-10 |
| - | 214A8-10542 | | FORK フォーク | 2 | [LF152] INC.6-10 |
| - | 214A8-10642 | | FORK フォーク | 2 | [LF160] INC.6-10 |
| - | 214A8-10552 | | FORK フォーク | 2 | [LF167] INC.6-10 |
| - | 214A8-10653 | | FORK フォーク | 2 | [LF170] INC.6-10 |
| - | 214A8-10663 | | FORK フォーク | 2 | [LF180] INC.6-10 |
| - | 214A8-10563 | | FORK フォーク | 2 | [LF182] INC.6-10 |
| - | 214A8-10673 | | FORK フォーク | 2 | [LF190] INC.6-10 |
| - | 214A8-10683 | | FORK フォーク | 2 | [LF200] INC.6-10 |
| - | 234A8-10571 | | FORK フォーク | 2 | [LFD090] INC.2-5 |
| - | 234A8-10501 | | FORK フォーク | 2 | [LFD092] INC.2-5 |
| - | 234A8-10581 | | FORK フォーク | 2 | [LFD100] INC.2-5 |
| - | 234A8-10511 | | FORK フォーク | 2 | [LFD107] INC.2-5 |
| - | 234A8-10591 | | FORK フォーク | 2 | [LFD110] INC.2-5 |
| - | 234A8-10601 | | FORK フォーク | 2 | [LFD120] INC.2-5 |
| - | 234A8-10521 | | FORK フォーク | 2 | [LFD122] INC.2-5 |
| - | 234A8-10611 | | FORK フォーク | 2 | [LFD130] INC.2-5 |
| - | 234A8-10531 | | FORK フォーク | 2 | [LFD137] INC.2-5 |
| - | 234A8-10621 | | FORK フォーク | 2 | [LFD140] INC.2-5 |
| - | 234A8-10631 | | FORK フォーク | 2 | [LFD150] INC.2-5 |
| - | 234A8-10541 | | FORK フォーク | 2 | [LFD152] INC.2-5 |
| - | 234A8-10641 | | FORK フォーク | 2 | [LFD160] INC.2-5 |
| - | 234A8-10551 | | FORK フォーク | 2 | [LFD167] INC.2-5 |
| - | 234A8-10652 | | FORK フォーク | 2 | [LFD170] INC.2-5 |
| - | 234A8-10662 | | FORK フォーク | 2 | [LFD180] INC.2-5 |
| - | 234A8-10562 | | FORK フォーク | 2 | [LFD182] INC.2-5 |
| - | 234A8-10672 | | FORK フォーク | 2 | [LFD190] INC.2-5 |
| - | 234A8-10682 | | FORK フォーク | 2 | [LFD200] INC.2-5 |
| - | 22N58-10501 | | FORK フォーク | 2 | [LF092/CASCADE] INC.11 |
| - | 22N58-10511 | | FORK フォーク | 2 | [LF107/CASCADE] INC.11 |

# FIG.200 FORK [VM2N5]

(M7028110) フォーク

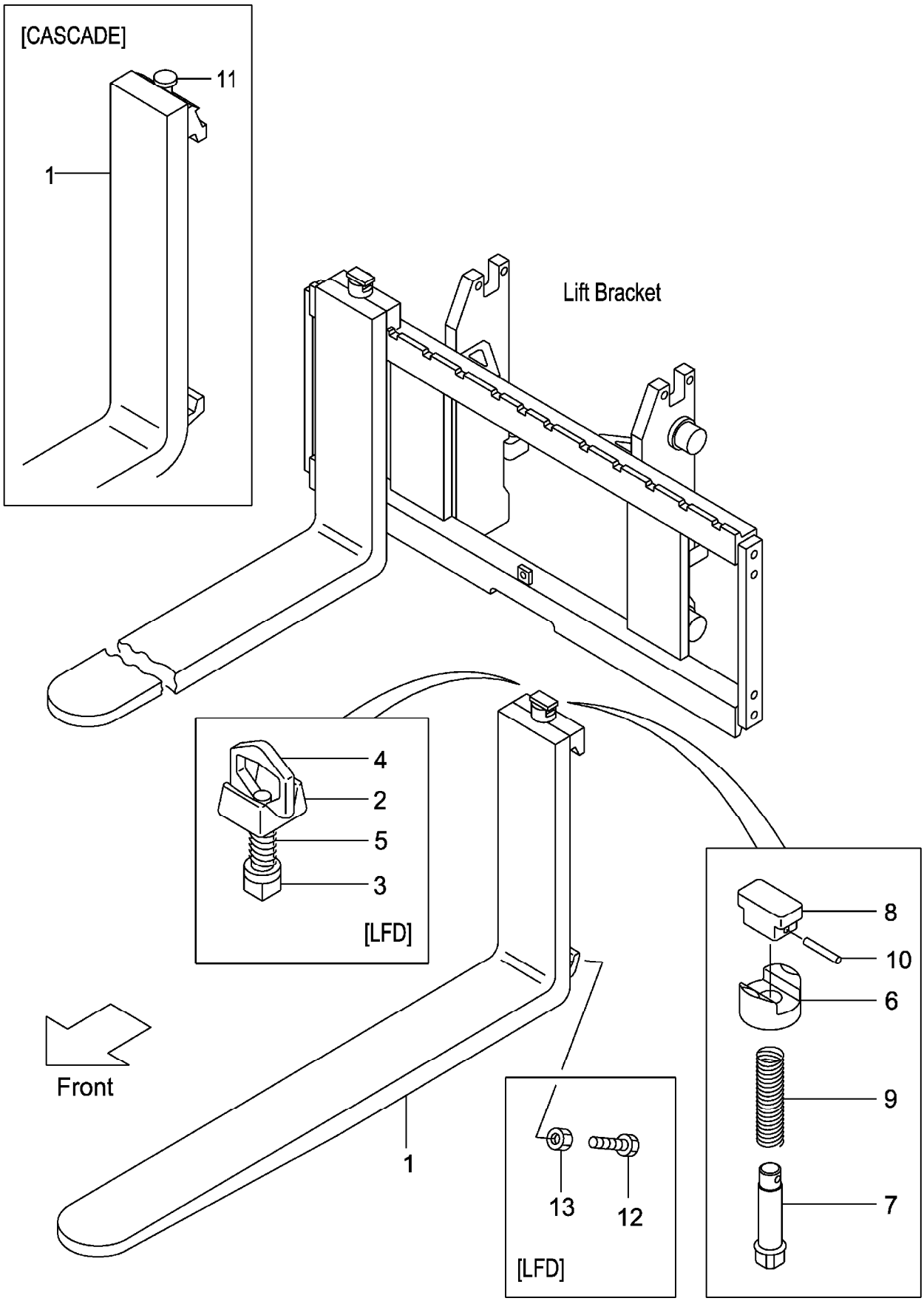

A:VM2N5(FG20C13-FD20T13) C:VM2N5(F(H)G20C3-F(H)D20W3)
B:VM2N5(FG25C13-FD25T13) D:VM2N5(F(H)G25C3-F(H)D25W3)

(M7028110)

| Item No | Part No. | Mark | Description | | Req'd | Remarks : Serial No. |
|---|---|---|---|---|---|---|
| - | 22N58-10521 | | FORK | ﾌｫｰｸ | 2 | [LF122/CASCADE] INC.11 |
| A1 | 214A8-11001 | | STOPPER-ASSY,FORK | ﾌｫｰｸｽﾄｯﾊﾟｱｯｾﾝ | 2 | [LFD] INC.2-5 |
| 2 | 214A8-12001 | | HEAD | ﾍｯﾄﾞ | 2 | [LFD] |
| 3 | 214A8-12011 | | STOPPER | ｽﾄｯﾊﾟ | 2 | [LFD] |
| 4 | 214A8-12021 | | HANDLE | ﾊﾝﾄﾞﾙ | 2 | [LFD] |
| 5 | 214A8-12031 | | SPRING | ｽﾌﾟﾘﾝｸﾞ | 2 | [LFD] |
| 6 | 216G8-12921 | | HOLDER | ﾎﾙﾀﾞ | 2 | [LF] |
| 7 | 231A8-12001 | | PIN | ﾋﾟﾝ | 2 | [LF] |
| 8 | 231A8-12011 | | KNOB | ﾉﾌﾞ | 2 | [LF] |
| 9 | 231A8-12021 | | SPRING | ｽﾌﾟﾘﾝｸﾞ | 2 | [LF] |
| 10 | 231A8-12031 | | PIN,SPRING | ﾋﾟﾝ | 2 | [LF] |
| 11 | W-K2PK-M | | KIT,PIN,STOPPER | ｽｯﾄﾊﾟﾋﾟﾝｷｯﾄ | 2 | [CASCADE] |
| 12 | 216G8-12101 | | BOLT | ﾎﾞﾙﾄ | 4 | [LFD] |
| 13 | 01402-00010 | | NUT | ﾅｯﾄ | 4 | [LFD] |

# M E M O

# M E M O

# FIG.201 LIFT BRACKET [VM2N5]

(M7028210) ﾘﾌﾄﾌﾞﾗｹｯﾄ

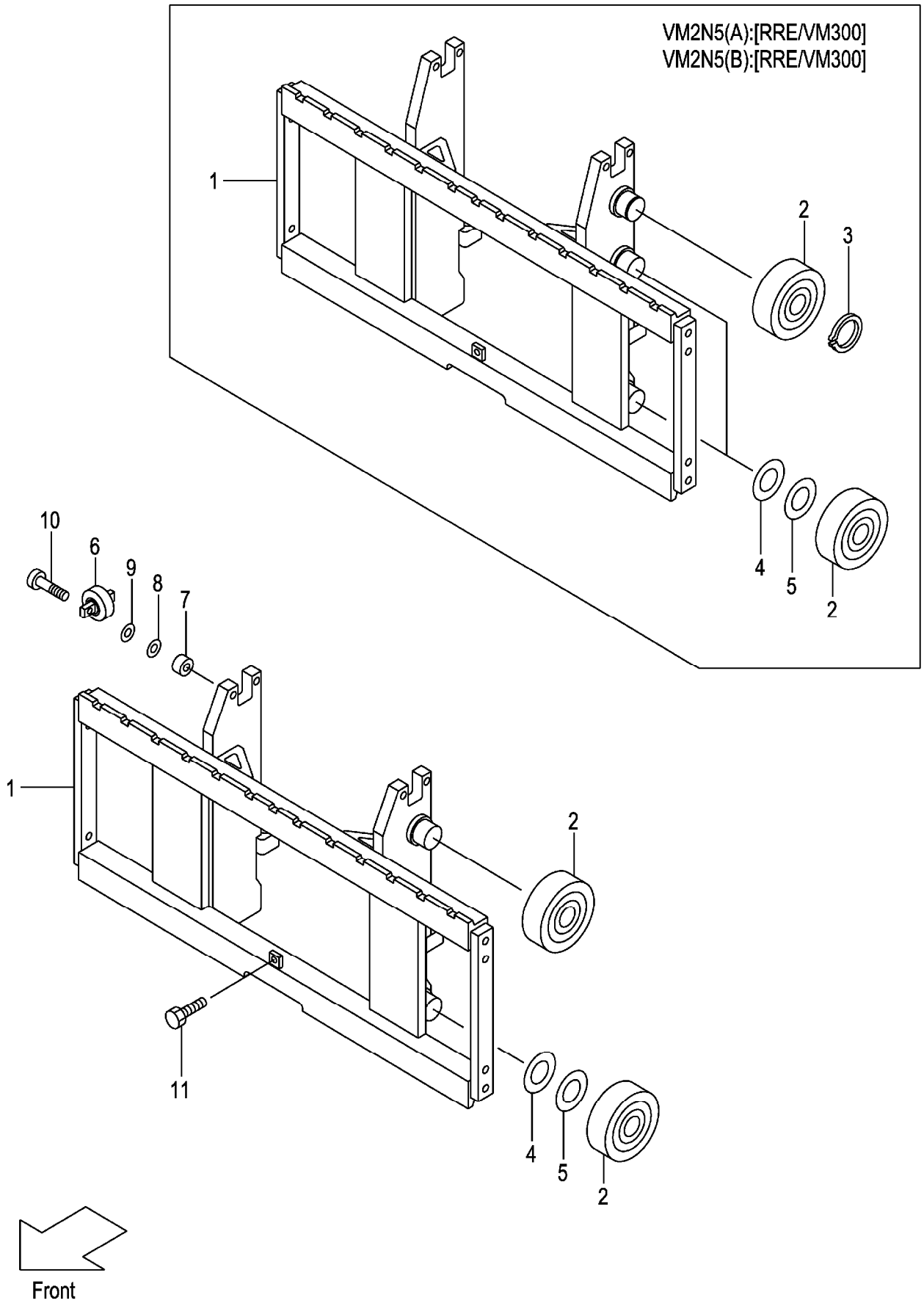

A:VM2N5(FG20C13-FD20T13) C:VM2N5(F(H)G20C3-F(H)D20W3)
B:VM2N5(FG25C13-FD25T13) D:VM2N5(F(H)G25C3-F(H)D25W3)

| Item No | Part No. | Mark | Description | | Req'd | Remarks : Serial No. |
|---|---|---|---|---|---|---|
| 1 | 22N58-20201 | | BRACKET,LIFT | ﾌﾞﾗｹｯﾄ | 1 | |
| - | 22N58-20201 | | BRACKET,LIFT | ﾌﾞﾗｹｯﾄ | 1 | A,B [RRE/VM200-VM275] |
| - | 22N58-20701 | | BRACKET,LIFT | ﾌﾞﾗｹｯﾄ | 1 | A,B [RRE/VM300] |
| 2 | 277P8-22051 | | ROLLER,END,119.0 | ﾛｰﾗ | 4 | |
| - | 277P8-22051 | | ROLLER,END,119.0 | ﾛｰﾗ | 6 | A,B [RRE/VM300] |
| - | 277P8-22061 | | ROLLER,END,119.5 | ﾛｰﾗ | (4) | |
| - | 277P8-22061 | | ROLLER,END,119.5 | ﾛｰﾗ | (6) | A,B [RRE/VM300] |
| 3 | 02100-00045 | | RING,SNAP | ｽﾅｯﾌﾟﾘﾝｸﾞ | 2 | A,B [RRE/VM300] |
| 4 | 277P8-22071 | | SHIM,T-0.5 | ｼﾑ | 5 | |
| 5 | 277P8-22081 | | SHIM,T-1.0 | ｼﾑ | 5 | |
| 6 | 22N58-32701 | | ROLLER,SIDE | ﾛｰﾗ | 2 | |
| - | 23458-32052 | | ROLLER,SIDE | ﾛｰﾗ | 2 | A,B [RRE/VM300] |
| 7 | 22N58-32711 | | SPACER | ｽﾍﾟｰｻ | 4 | |
| - | 22548-34031 | | SPACER | ｽﾍﾟｰｻ | 4 | A,B [RRE/VM300] |
| 8 | 22018-30261 | | SHIM | ｼﾑ | 2 | |
| - | 22548-34051 | | SHIM,T-0.5 | ｼﾑ | 5 | A,B [RRE/VM300] |
| 9 | 22018-30121 | | SHIM | ｼﾑ | 2 | |
| - | 22548-34061 | | SHIM,T-1.0 | ｼﾑ | 5 | A,B [RRE/VM300] |
| 10 | 01103-10045 | | BOLT | ﾎﾞﾙﾄ | 4 | |
| - | 01184-12050 | | BOLT & WASHER | ﾎﾞﾙﾄ & ﾜｯｼｬ | 4 | A,B [RRE/VM300] |
| 11 | 01184-12025 | | BOLT | ﾎﾞﾙﾄ | 1 | |

# FIG.202 BACKREST [VM2N5]

(M7028220) ﾊﾞｯｸﾚｽﾄ

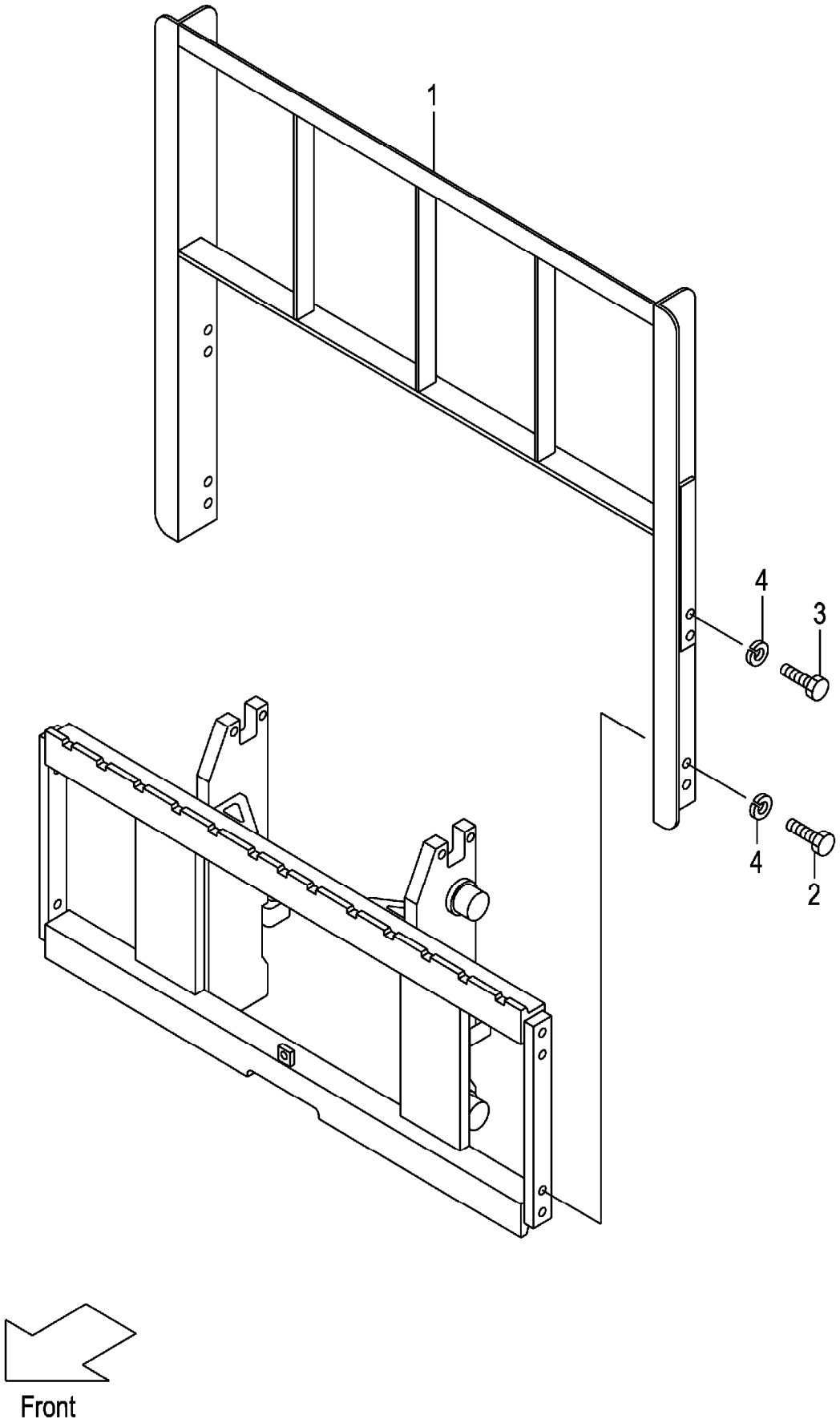

A:VM2N5(FG20C13-FD20T13) C:VM2N5(F(H)G20C3-F(H)D20W3)
B:VM2N5(FG25C13-FD25T13) D:VM2N5(F(H)G25C3-F(H)D25W3)

(M7028220)

| Item No | Part No. | Mark | Description | | Req'd | Remarks : Serial No. |
|---|---|---|---|---|---|---|
| 1 | 234A8-22202 | | BACKREST | ﾊﾞｯｸﾚｽﾄ | 1 | |
| 2 | 01100-14025 | | BOLT | ﾎﾞﾙﾄ | 4 | |
| 3 | 01100-14030 | | BOLT | ﾎﾞﾙﾄ | 4 | |
| 4 | 02010-00014 | | WASHER | ﾜｯｼｬ | 8 | |

# FIG.203 MAST [VM2N5]

(M7028310) マスト

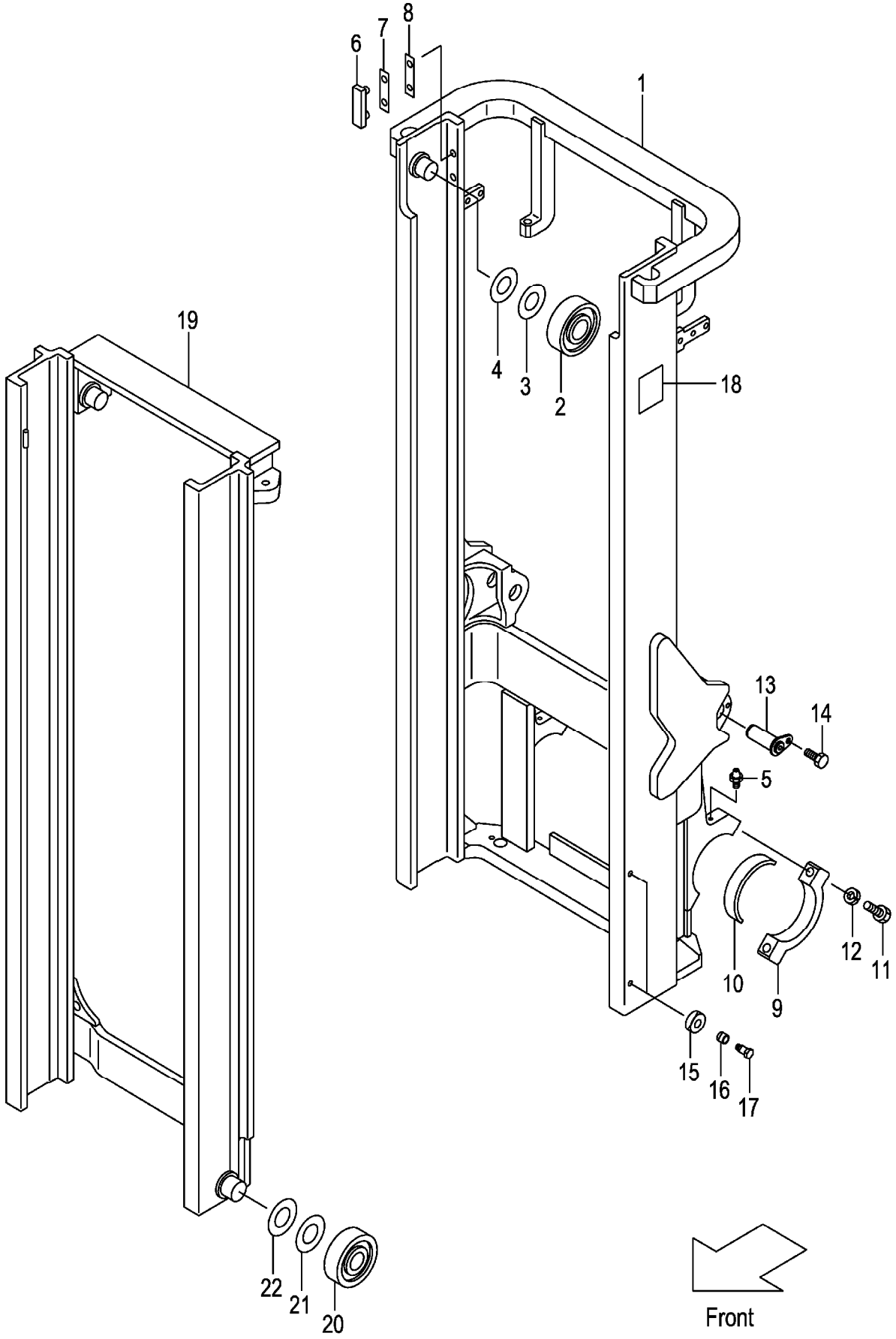

A:VM2N5(FG20C13-FD20T13) C:VM2N5(F(H)G20C3-F(H)D20W3)
B:VM2N5(FG25C13-FD25T13) D:VM2N5(F(H)G25C3-F(H)D25W3)

| Item No | Part No. | Mark | Description | | Req'd | Remarks : Serial No. |
|---|---|---|---|---|---|---|
| 1 | 22N58-30211 | | MAST,OUTER VM200 | ｱｳﾀﾏｽﾄ | 1 | |
| - | 22N58-30221 | | MAST,OUTER VM225 | ｱｳﾀﾏｽﾄ | 1 | |
| - | 22N58-30231 | | MAST,OUTER VM250 | ｱｳﾀﾏｽﾄ | 1 | |
| - | 22N58-30241 | | MAST,OUTER VM270 | ｱｳﾀﾏｽﾄ | 1 | |
| - | 22N58-30251 | | MAST,OUTER VM275 | ｱｳﾀﾏｽﾄ | 1 | |
| - | 22N58-30201 | | MAST,OUTER VM300 | ｱｳﾀﾏｽﾄ | 1 | |
| - | 22N58-30261 | | MAST,OUTER VM325 | ｱｳﾀﾏｽﾄ | 1 | |
| - | 22N58-30271 | | MAST,OUTER VM330 | ｱｳﾀﾏｽﾄ | 1 | |
| - | 22N58-30281 | | MAST,OUTER VM350 | ｱｳﾀﾏｽﾄ | 1 | |
| - | 22N58-30291 | | MAST,OUTER VM366 | ｱｳﾀﾏｽﾄ | 1 | |
| - | 22N58-30301 | | MAST,OUTER VM370 | ｱｳﾀﾏｽﾄ | 1 | |
| - | 22N58-30311 | | MAST,OUTER VM375 | ｱｳﾀﾏｽﾄ | 1 | |
| - | 22N58-30321 | | MAST,OUTER VM400 | ｱｳﾀﾏｽﾄ | 1 | |
| - | 22N58-30331 | | MAST,OUTER VM425 | ｱｳﾀﾏｽﾄ | 1 | |
| - | 22N58-30341 | | MAST,OUTER VM450 | ｱｳﾀﾏｽﾄ | 1 | |
| - | 22N58-30351 | | MAST,OUTER VM475 | ｱｳﾀﾏｽﾄ | 1 | |
| - | 22N58-30361 | | MAST,OUTER VM500 | ｱｳﾀﾏｽﾄ | 1 | |
| - | 22N58-30371 | | MAST,OUTER VM550 | ｱｳﾀﾏｽﾄ | 1 | |
| - | 22N58-30381 | | MAST,OUTER VM600 | ｱｳﾀﾏｽﾄ | 1 | |
| - | 22N58-30211 | | MAST,OUTER VM200 | ｱｳﾀﾏｽﾄ | 1 | A,B [RRE] |
| - | 22N58-30221 | | MAST,OUTER VM225 | ｱｳﾀﾏｽﾄ | 1 | A,B [RRE] |
| - | 22N58-30231 | | MAST,OUTER VM250 | ｱｳﾀﾏｽﾄ | 1 | A,B [RRE] |
| - | 22N58-30241 | | MAST,OUTER VM270 | ｱｳﾀﾏｽﾄ | 1 | A,B [RRE] |
| - | 22N58-30251 | | MAST,OUTER VM275 | ｱｳﾀﾏｽﾄ | 1 | A,B [RRE] |
| - | 22N58-30391 | | MAST,OUTER VM300 | ｱｳﾀﾏｽﾄ | 1 | A,B [RRE] |
| 2 | 277P8-22051 | | ROLLER,END,119.0 | ﾛｰﾗ | 2 | |
| 3 | 277P8-22071 | | SHIM,T-0.5 | ｼﾑ | 12 | |
| 4 | 277P8-22081 | | SHIM,T-1.0 | ｼﾑ | 12 | |
| 5 | 04901-00100 | | FITTING | ﾌｨｯﾃｨﾝｸﾞ | 2 | |
| 6 | 216G8-33401 | | SLIPPER | ｽﾘｯﾊﾟ | 2 | |
| 7 | 216G8-33361 | | SHIM,T-0.5 | ｼﾑ | 8 | |
| 8 | 216G8-33371 | | SHIM,T-1.0 | ｼﾑ | 4 | |
| 9 | 277P8-32701 | | CAP | ｷｬｯﾌﾟ | 2 | |
| 10 | 214A8-02201 | | BUSHING | ﾌﾞｯｼﾝｸﾞ | 2 | |
| 11 | 01103-16065 | | BOLT | ﾎﾞﾙﾄ | 4 | |
| 12 | 02011-00016 | | WASHER | ﾜｯｼｬ | 4 | |
| 13 | 272K8-52201 | | PIN | ﾋﾟﾝ | 2 | |
| 14 | 216G8-52301 | | BOLT & WASHER | ﾎﾞﾙﾄ & ﾜｯｼｬ | 2 | |
| 15 | 22N58-34501 | | RUBBER | ﾗﾊﾞｰ | 4 | |
| 16 | 22N58-34601 | | COLLAR | ｶﾗｰ | 4 | |
| 17 | 214A0-82831 | | BOLT | ﾎﾞﾙﾄ | 4 | |
| 18 | 23678-06002 | | PLATE,NAME | ﾌﾟﾚｰﾄ | 1 | |
| 19 | 22N58-30411 | | MAST,INNER VM200 | ｲﾝﾅﾏｽﾄ | 1 | |
| - | 22N58-30421 | | MAST,INNER VM225 | ｲﾝﾅﾏｽﾄ | 1 | |

# FIG.203 MAST [VM2N5]

(M7028310) マスト

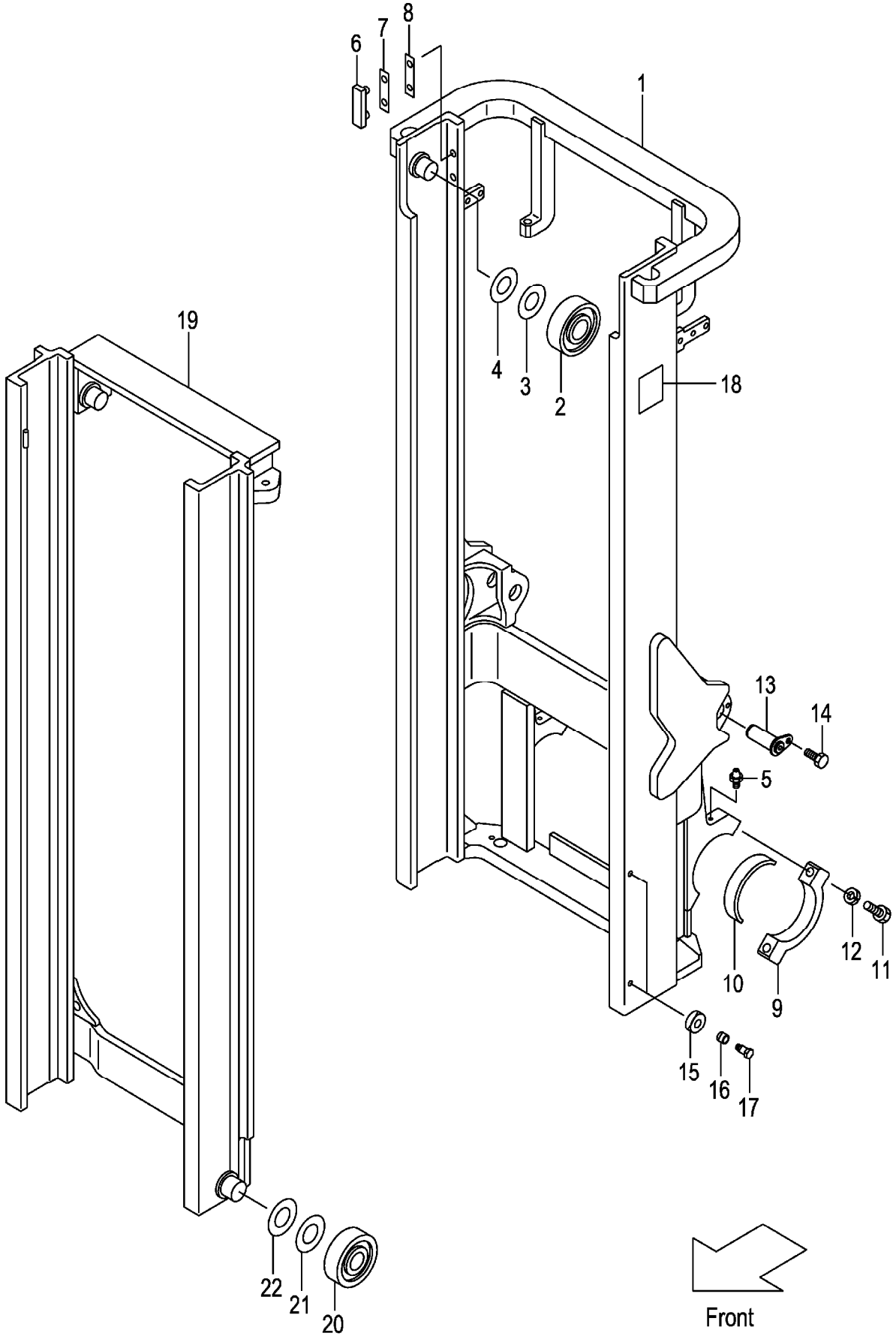

A:VM2N5(FG20C13-FD20T13) C:VM2N5(F(H)G20C3-F(H)D20W3)
B:VM2N5(FG25C13-FD25T13) D:VM2N5(F(H)G25C3-F(H)D25W3)

(M7028310)

| Item No | Part No. | Mark | Description | | Req'd | Remarks : Serial No. |
|---|---|---|---|---|---|---|
| - | 22N58-30431 | | MAST,INNER VM250 | ｲﾝﾅﾏｽﾄ | 1 | |
| - | 22N58-30441 | | MAST,INNER VM270 | ｲﾝﾅﾏｽﾄ | 1 | |
| - | 22N58-30451 | | MAST,INNER VM275 | ｲﾝﾅﾏｽﾄ | 1 | |
| - | 22N58-30401 | | MAST,INNER VM300 | ｲﾝﾅﾏｽﾄ | 1 | |
| - | 22N58-30461 | | MAST,INNER VM325 | ｲﾝﾅﾏｽﾄ | 1 | |
| - | 22N58-30471 | | MAST,INNER VM330 | ｲﾝﾅﾏｽﾄ | 1 | |
| - | 22N58-30481 | | MAST,INNER VM350 | ｲﾝﾅﾏｽﾄ | 1 | |
| - | 22N58-30491 | | MAST,INNER VM366 | ｲﾝﾅﾏｽﾄ | 1 | |
| - | 22N58-30501 | | MAST,INNER VM370 | ｲﾝﾅﾏｽﾄ | 1 | |
| - | 22N58-30511 | | MAST,INNER VM375 | ｲﾝﾅﾏｽﾄ | 1 | |
| - | 22N58-30521 | | MAST,INNER VM400 | ｲﾝﾅﾏｽﾄ | 1 | |
| - | 22N58-30531 | | MAST,INNER VM425 | ｲﾝﾅﾏｽﾄ | 1 | |
| - | 22N58-30541 | | MAST,INNER VM450 | ｲﾝﾅﾏｽﾄ | 1 | |
| - | 22N58-30551 | | MAST,INNER VM475 | ｲﾝﾅﾏｽﾄ | 1 | |
| - | 22N58-30561 | | MAST,INNER VM500 | ｲﾝﾅﾏｽﾄ | 1 | |
| - | 22N58-30571 | | MAST,INNER VM550 | ｲﾝﾅﾏｽﾄ | 1 | |
| - | 22N58-30581 | | MAST,INNER VM600 | ｲﾝﾅﾏｽﾄ | 1 | |
| - | 22N58-30411 | | MAST,INNER VM200 | ｲﾝﾅﾏｽﾄ | 1 | A,B [RRE] |
| - | 22N58-30421 | | MAST,INNER VM225 | ｲﾝﾅﾏｽﾄ | 1 | A,B [RRE] |
| - | 22N58-30431 | | MAST,INNER VM250 | ｲﾝﾅﾏｽﾄ | 1 | A,B [RRE] |
| - | 22N58-30441 | | MAST,INNER VM270 | ｲﾝﾅﾏｽﾄ | 1 | A,B [RRE] |
| - | 22N58-30451 | | MAST,INNER VM275 | ｲﾝﾅﾏｽﾄ | 1 | A,B [RRE] |
| - | 22N58-30591 | | MAST,INNER VM300 | ｲﾝﾅﾏｽﾄ | 1 | A,B [RRE] |
| 20 | 277P8-22051 | | ROLLER,END,119.0 | ﾛｰﾗ | 2 | |
| - | 277P8-22061 | | ROLLER,END,119.5 | ﾛｰﾗ | (2) | |
| 21 | 277P8-22071 | | SHIM,T-0.5 | ｼﾑ | 12 | |
| 22 | 277P8-22081 | | SHIM,T-1.0 | ｼﾑ | 12 | |

# M E M O

# M E M O

# FIG.204 LIFT CYLINDER [VM2N5]

(M7028410) リフトシリンダ

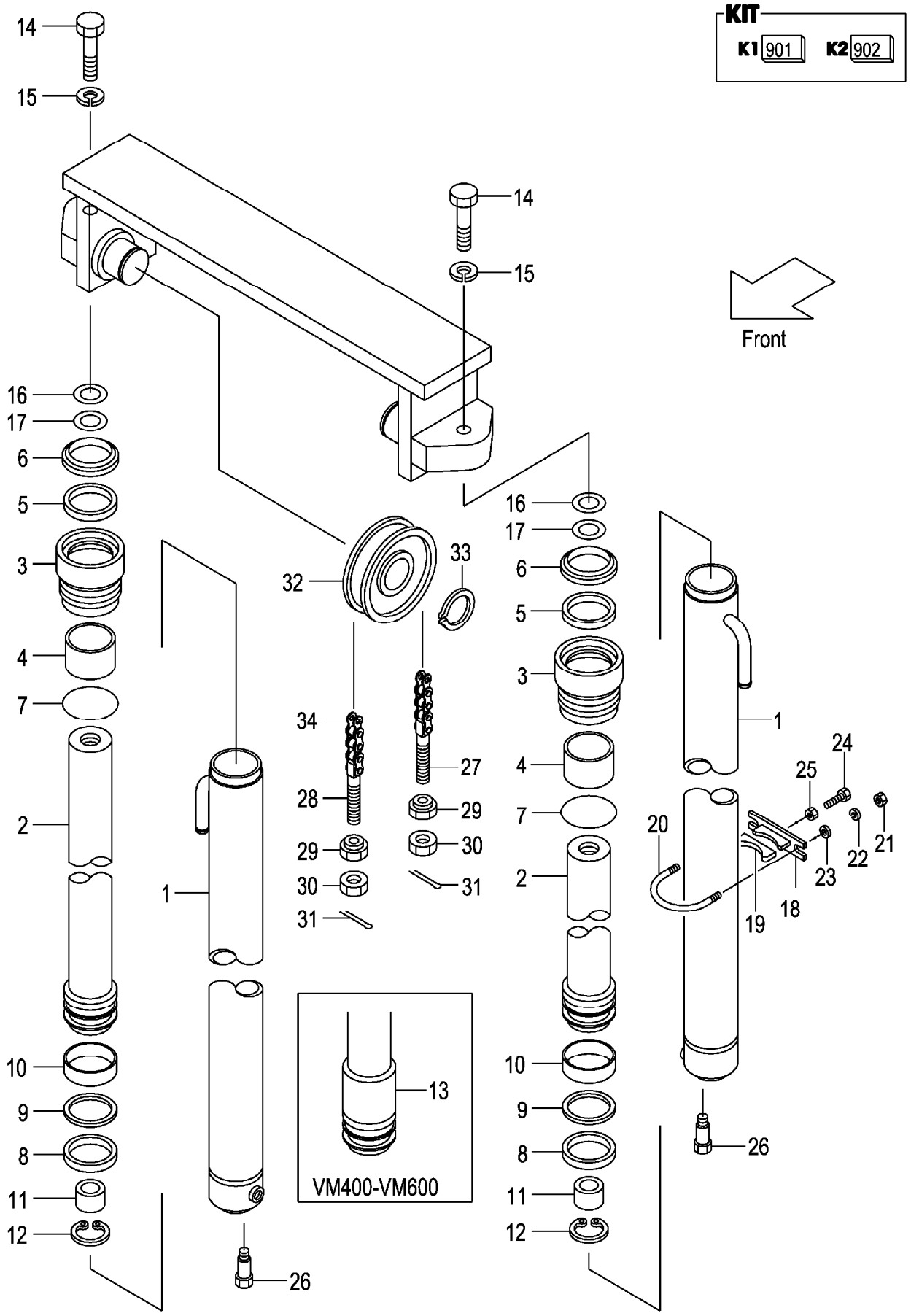

A:VM2N5(FG20C13-FD20T13) C:VM2N5(F(H)G20C3-F(H)D20W3)
B:VM2N5(FG25C13-FD25T13) D:VM2N5(F(H)G25C3-F(H)D25W3)

(M7028410)

| Item No | Part No. | Mark | Description | | Req'd | Remarks : Serial No. |
|---|---|---|---|---|---|---|
| A1 | 22N58-40211 | | CYL-ASSY,LIFT VM200 | ﾘﾌﾄｼﾘﾝﾀﾞｱｯｾﾝ | 2 | INC.1-12 |
| - | 22N58-40221 | | CYL-ASSY,LIFT VM225 | ﾘﾌﾄｼﾘﾝﾀﾞｱｯｾﾝ | 2 | INC.1-12 |
| - | 22N58-40231 | | CYL-ASSY,LIFT VM250 | ﾘﾌﾄｼﾘﾝﾀﾞｱｯｾﾝ | 2 | INC.1-12 |
| - | 22N58-40241 | | CYL-ASSY,LIFT VM270 | ﾘﾌﾄｼﾘﾝﾀﾞｱｯｾﾝ | 2 | INC.1-12 |
| - | 22N58-40251 | | CYL-ASSY,LIFT VM275 | ﾘﾌﾄｼﾘﾝﾀﾞｱｯｾﾝ | 2 | INC.1-12 |
| - | 22N58-40201 | | CYL-ASSY,LIFT VM300 | ﾘﾌﾄｼﾘﾝﾀﾞｱｯｾﾝ | 2 | INC.1-12 |
| - | 22N58-40261 | | CYL-ASSY,LIFT VM325 | ﾘﾌﾄｼﾘﾝﾀﾞｱｯｾﾝ | 2 | INC.1-12 |
| - | 22N58-40271 | | CYL-ASSY,LIFT VM330 | ﾘﾌﾄｼﾘﾝﾀﾞｱｯｾﾝ | 2 | INC.1-12 |
| - | 22N58-40281 | | CYL-ASSY,LIFT VM350 | ﾘﾌﾄｼﾘﾝﾀﾞｱｯｾﾝ | 2 | INC.1-12 |
| - | 22N58-40291 | | CYL-ASSY,LIFT VM366 | ﾘﾌﾄｼﾘﾝﾀﾞｱｯｾﾝ | 2 | INC.1-12 |
| - | 22N58-40301 | | CYL-ASSY,LIFT VM370 | ﾘﾌﾄｼﾘﾝﾀﾞｱｯｾﾝ | 2 | INC.1-12 |
| - | 22N58-40311 | | CYL-ASSY,LIFT VM375 | ﾘﾌﾄｼﾘﾝﾀﾞｱｯｾﾝ | 2 | INC.1-12 |
| - | 22N58-40321 | | CYL-ASSY,LIFT VM400 | ﾘﾌﾄｼﾘﾝﾀﾞｱｯｾﾝ | 2 | INC.1-13 |
| - | 22N58-40331 | | CYL-ASSY,LIFT VM425 | ﾘﾌﾄｼﾘﾝﾀﾞｱｯｾﾝ | 2 | INC.1-13 |
| - | 22N58-40341 | | CYL-ASSY,LIFT VM450 | ﾘﾌﾄｼﾘﾝﾀﾞｱｯｾﾝ | 2 | INC.1-13 |
| - | 22N58-40351 | | CYL-ASSY,LIFT VM475 | ﾘﾌﾄｼﾘﾝﾀﾞｱｯｾﾝ | 2 | INC.1-13 |
| - | 22N58-40361 | | CYL-ASSY,LIFT VM500 | ﾘﾌﾄｼﾘﾝﾀﾞｱｯｾﾝ | 2 | INC.1-13 |
| - | 22N58-40371 | | CYL-ASSY,LIFT VM550 | ﾘﾌﾄｼﾘﾝﾀﾞｱｯｾﾝ | 2 | INC.1-13 |
| - | 22N58-40381 | | CYL-ASSY,LIFT VM600 | ﾘﾌﾄｼﾘﾝﾀﾞｱｯｾﾝ | 2 | INC.1-13 |
| 901 | B-3050B-00119 | K1 | KIT,CAP | ｷｬｯﾌﾟｷｯﾄ | 2 | INC.3,4 |
| 902 | B-3050A-00093 | K2 | KIT,REPAIR | ﾘﾍﾟｱｷｯﾄ | 2 | INC.5-9 |
| 1 | NO PART NO. | # | BODY,CYL | ﾎﾞﾃﾞｨ | 2 | (VM200-600) |
| 2 | NO PART NO. | # | ROD,PISTON | ﾛｯﾄﾞ | 2 | (VM200-600) |
| 3 | B-30121-50102 | * | CAP | ｷｬｯﾌﾟ | 2 | |
| 4 | B-30131-40017 | * | BUSHING | ﾌﾞｯｼﾝｸﾞ | 2 | |
| 5 | B-30961-04012 | * | U-RING | Uﾘﾝｸﾞ | 2 | |
| 6 | B-30191-40025 | * | RING,WIPER | ﾘﾝｸﾞ | 2 | |
| 7 | B-30161-91774 | * | O-RING | Oﾘﾝｸﾞ | 2 | |
| 8 | B-30161-50046 | * | U-RING | Uﾘﾝｸﾞ | 2 | |
| 9 | B-30461-50039 | * | RING,BACK-UP | ﾘﾝｸﾞ | 2 | |
| 10 | B-30131-50018 | | BUSHING | ﾌﾞｯｼﾝｸﾞ | 2 | |
| 11 | B-B6551-91008 | | RING | ﾘﾝｸﾞ | 2 | |
| 12 | B-30141-91049 | | RING,SNAP | ｽﾅｯﾌﾟﾘﾝｸﾞ | 2 | |
| 13 | B-B6111-40022 | | SPACER | ｽﾍﾟｰｻ | 2 | (VM400-500) |
| - | B-B6111-40024 | | SPACER | ｽﾍﾟｰｻ | 2 | (VM550-600) |
| 14 | 01103-14040 | | BOLT | ﾎﾞﾙﾄ | 2 | |
| 15 | 02011-00014 | | WASHER | ﾜｯｼｬ | 2 | |
| 16 | 22517-40051 | | SHIM,T-0.2 | ｼﾑ | 4 | |
| 17 | 22717-40081 | | SHIM,T-0.5 | ｼﾑ | 4 | |
| A2 | 225N8-43021 | | SUPPORT-ASSY | ｻﾎﾟｰﾄｱｯｾﾝ | 2 | (VM550,600) INC.18,19 |
| 18 | 22N58-43011 | | SUPPORT | ｻﾎﾟｰﾄ | 2 | (VM200-500) |
| - | 22N58-43011 | | SUPPORT | ｻﾎﾟｰﾄ | 4 | (VM550,600) |
| 19 | 24868-42111 | | RUBBER | ﾗﾊﾞｰ | 2 | (VM550,600) |
| 20 | 234A8-42551 | | U-BOLT | Uﾎﾞﾙﾄ | 2 | (VM200-500) |
| - | 234A8-42551 | | U-BOLT | Uﾎﾞﾙﾄ | 4 | (VM550,600) |
| 21 | 01400-00010 | | NUT | ﾅｯﾄ | 4 | (VM200-500) |
| - | 01400-00010 | | NUT | ﾅｯﾄ | 8 | (VM550,600) |
| 22 | 02010-20010 | | WASHER | ﾜｯｼｬ | 4 | (VM200-500) |
| - | 02010-20010 | | WASHER | ﾜｯｼｬ | 8 | (VM550,600) |
| 23 | 02000-20010 | | WASHER | ﾜｯｼｬ | 4 | (VM200-500) |

# FIG.204 LIFT CYLINDER [VM2N5]

(M7028410) リフトシリンダ

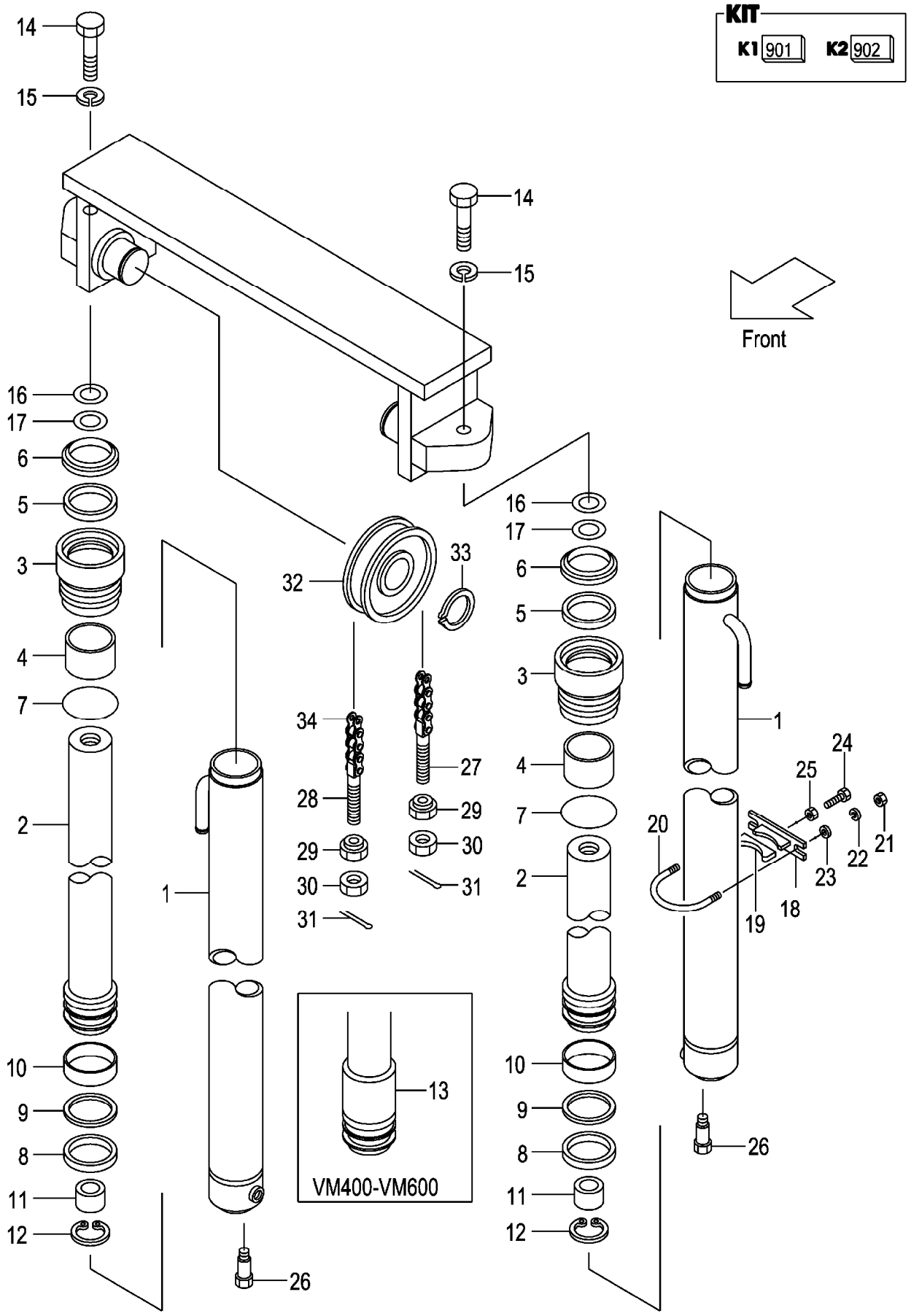

A:VM2N5(FG20C13-FD20T13) C:VM2N5(F(H)G20C3-F(H)D20W3)
B:VM2N5(FG25C13-FD25T13) D:VM2N5(F(H)G25C3-F(H)D25W3)

(M7028410)

| Item No | Part No. | Mark | Description | | Req'd | Remarks : Serial No. |
|---|---|---|---|---|---|---|
| - | 02000-20010 | | WASHER | ﾜｯｼｬ | 8 | (VM550,600) |
| 24 | 01120-12040 | | BOLT | ﾎﾞﾙﾄ | 2 | (VM200-500) |
| - | 01120-12040 | | BOLT | ﾎﾞﾙﾄ | 4 | (VM550,600) |
| 25 | 01400-00012 | | NUT | ﾅｯﾄ | 2 | (VM200-500) |
| - | 01400-00012 | | NUT | ﾅｯﾄ | 4 | (VM550,600) |
| 26 | 214A8-42661 | | BOLT | ﾎﾞﾙﾄ | 2 | |
| 27 | 23500-82001 | | PIN,ANCHOR | ﾋﾟﾝ | 2 | |
| 28 | 52672-72231 | | PIN,ANCHOR | ﾋﾟﾝ | 2 | |
| 29 | 22218-40191 | | NUT | ﾅｯﾄ | 4 | |
| 30 | 01400-00018 | | NUT | ﾅｯﾄ | 4 | |
| 31 | 02200-03030 | | PIN | ﾋﾟﾝ | 4 | |
| 32 | 234A8-43501 | | SHEAVE | ｼｰﾌﾞ | 2 | |
| 33 | 02100-00040 | | RING,SNAP | ｽﾅｯﾌﾟﾘﾝｸﾞ | 2 | |
| 34 | 22679-45711 | | CHAIN,LEAF VM200 | ﾁｪｰﾝ | 2 | |
| - | 22679-45771 | | CHAIN,LEAF VM225 | ﾁｪｰﾝ | 2 | |
| - | 22679-45851 | | CHAIN,LEAF VM250 | ﾁｪｰﾝ | 2 | |
| - | 22679-45891 | | CHAIN,LEAF VM270 | ﾁｪｰﾝ | 2 | |
| - | 22679-45911 | | CHAIN,LEAF VM275 | ﾁｪｰﾝ | 2 | |
| - | 22679-45971 | | CHAIN,LEAF VM300 | ﾁｪｰﾝ | 2 | |
| - | 22679-46031 | | CHAIN,LEAF VM325 | ﾁｪｰﾝ | 2 | |
| - | 22679-46051 | | CHAIN,LEAF VM330 | ﾁｪｰﾝ | 2 | |
| - | 22679-46111 | | CHAIN,LEAF VM350 | ﾁｪｰﾝ | 2 | |
| - | 22679-46151 | | CHAIN,LEAF VM366 | ﾁｪｰﾝ | 2 | |
| - | 22679-46151 | | CHAIN,LEAF VM370 | ﾁｪｰﾝ | 2 | |
| - | 22679-46171 | | CHAIN,LEAF VM375 | ﾁｪｰﾝ | 2 | |
| - | 22679-46271 | | CHAIN,LEAF VM400 | ﾁｪｰﾝ | 2 | |
| - | 22679-46331 | | CHAIN,LEAF VM425 | ﾁｪｰﾝ | 2 | |
| - | 22679-46391 | | CHAIN,LEAF VM450 | ﾁｪｰﾝ | 2 | |
| - | 22679-46451 | | CHAIN,LEAF VM475 | ﾁｪｰﾝ | 2 | |
| - | 22679-46531 | | CHAIN,LEAF VM500 | ﾁｪｰﾝ | 2 | |
| - | 22679-46691 | | CHAIN,LEAF VM550 | ﾁｪｰﾝ | 2 | |
| - | 22679-46811 | | CHAIN,LEAF VM600 | ﾁｪｰﾝ | 2 | |

# M E M O

# M E M O

# FIG.205 MAST PIPING [VM2N5]

(M7028420) マストパイピング

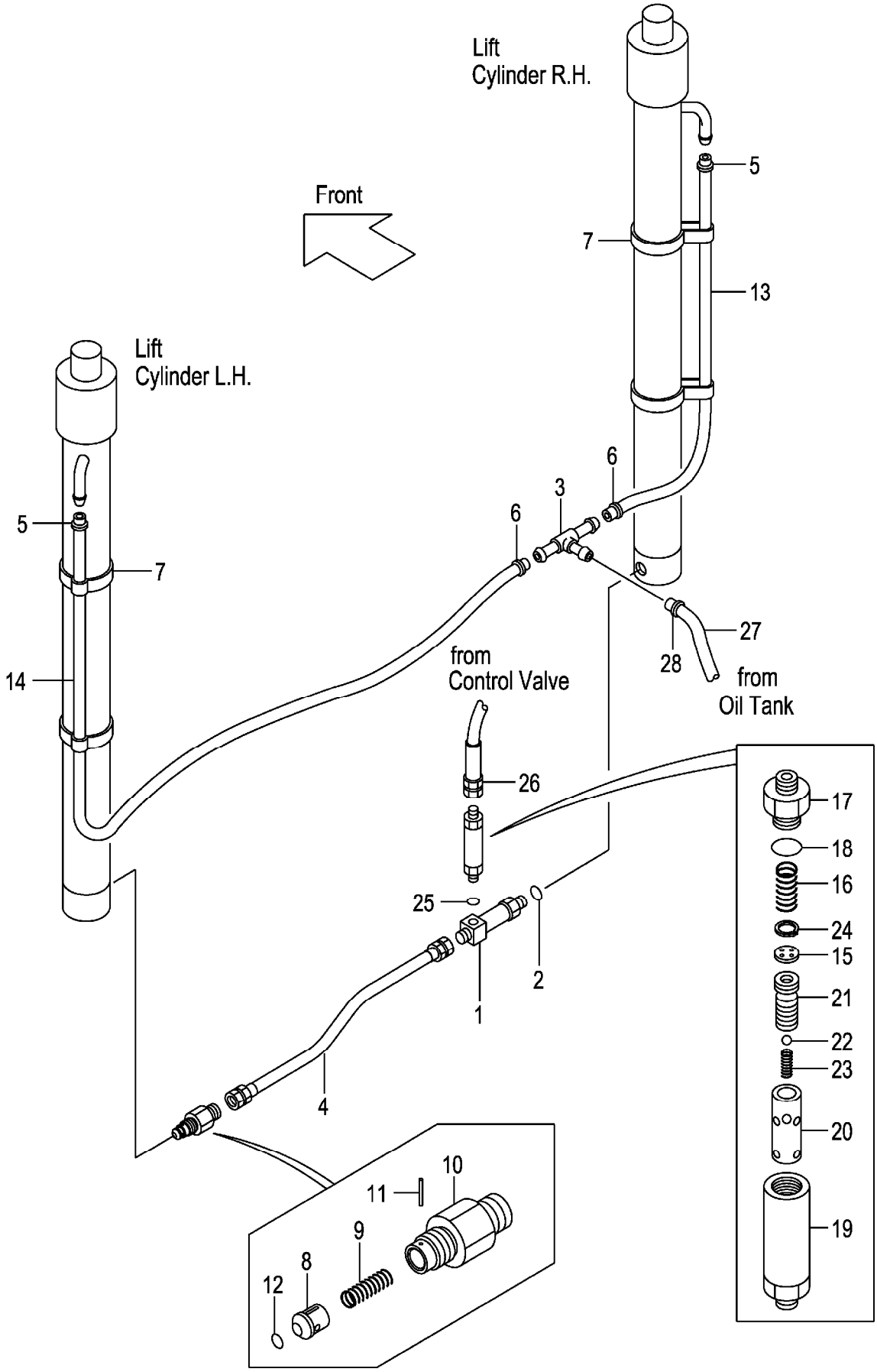

A:VM2N5(FG20C13-FD20T13) C:VM2N5(F(H)G20C3-F(H)D20W3)
B:VM2N5(FG25C13-FD25T13) D:VM2N5(F(H)G25C3-F(H)D25W3)

(M7028420)

| Item No | Part No. | Mark | Description | | Req'd | Remarks : Serial No. |
|---|---|---|---|---|---|---|
| A1 | 234A8-41101 | | THREE-WAY-ASSY | ｽﾘｰｳｪｲｱｯｾﾝ | 1 | INC.1,2 |
| 1 | NO PART NO. | # | THREE-WAY | ｽﾘｰｳｪｲ | 1 | |
| 2 | 03320-00140 | | O-RING | Oﾘﾝｸﾞ | 1 | |
| 3 | 53675-55051 | | THREE-WAY | ｽﾘｰｳｪｲ | 1 | |
| 4 | 234A8-02201 | | HOSE | ﾎｰｽ | 1 | |
| 5 | 24329-46201 | | CLIP | ｸﾘｯﾌﾟ | 2 | |
| 6 | 04911-00021 | | CLIP | ｸﾘｯﾌﾟ | 2 | |
| 7 | 22N58-45001 | | BAND | ﾊﾞﾝﾄﾞ | 4 | |
| A2 | 234A8-40701 | | VALVE-ASSY,CUT | ｶｯﾄﾊﾞﾙﾌﾞｱｯｾﾝ | 1 | INC.8-12 |
| 8 | 234A8-42602 | | PISTON | ﾋﾟｽﾄﾝ | 1 | |
| 9 | 234A8-42611 | | SPRING | ｽﾌﾟﾘﾝｸﾞ | 1 | |
| 10 | 234A8-42622 | | NIPPLE | ﾆｯﾌﾟﾙ | 1 | |
| 11 | 02270-01014 | | PIN | ﾋﾟﾝ | 1 | |
| 12 | 03320-00140 | | O-RING | Oﾘﾝｸﾞ | 1 | |
| 13 | 04710-04110 | | HOSE,RH VM200 | ﾎｰｽ | 1 | |
| - | 04710-04120 | | HOSE,RH VM225 | ﾎｰｽ | 1 | |
| - | 04710-04135 | | HOSE,RH VM250 | ﾎｰｽ | 1 | |
| - | 04710-04145 | | HOSE,RH VM270 | ﾎｰｽ | 1 | |
| - | 04710-04145 | | HOSE,RH VM275 | ﾎｰｽ | 1 | |
| - | 04710-04160 | | HOSE,RH VM300 | ﾎｰｽ | 1 | |
| - | 04710-04170 | | HOSE,RH VM325 | ﾎｰｽ | 1 | |
| - | 04710-04175 | | HOSE,RH VM330 | ﾎｰｽ | 1 | |
| - | 04710-04185 | | HOSE,RH VM350 | ﾎｰｽ | 1 | |
| - | 04710-04195 | | HOSE,RH VM366 | ﾎｰｽ | 1 | |
| - | 04710-04195 | | HOSE,RH VM370 | ﾎｰｽ | 1 | |
| - | 04710-04195 | | HOSE,RH VM375 | ﾎｰｽ | 1 | |
| - | 04710-04215 | | HOSE,RH VM400 | ﾎｰｽ | 1 | |
| - | 04710-04225 | | HOSE,RH VM425 | ﾎｰｽ | 1 | |
| - | 04710-04240 | | HOSE,RH VM450 | ﾎｰｽ | 1 | |
| - | 04710-04250 | | HOSE,RH VM475 | ﾎｰｽ | 1 | |
| - | 04710-04265 | | HOSE,RH VM500 | ﾎｰｽ | 1 | |
| - | 04710-04295 | | HOSE,RH VM550 | ﾎｰｽ | 1 | |
| - | 04710-04320 | | HOSE,RH VM600 | ﾎｰｽ | 1 | |
| 14 | 04710-04145 | | HOSE,LH VM200 | ﾎｰｽ | 1 | |
| - | 04710-04165 | | HOSE,LH VM225 | ﾎｰｽ | 1 | |
| - | 04710-04170 | | HOSE,LH VM250 | ﾎｰｽ | 1 | |
| - | 04710-04180 | | HOSE,LH VM270 | ﾎｰｽ | 1 | |
| - | 04710-04180 | | HOSE,LH VM275 | ﾎｰｽ | 1 | |
| - | 04710-04190 | | HOSE,LH VM300 | ﾎｰｽ | 1 | |
| - | 04710-04205 | | HOSE,LH VM325 | ﾎｰｽ | 1 | |
| - | 04710-04210 | | HOSE,LH VM330 | ﾎｰｽ | 1 | |
| - | 04710-04220 | | HOSE,LH VM350 | ﾎｰｽ | 1 | |
| - | 04710-04230 | | HOSE,LH VM366 | ﾎｰｽ | 1 | |
| - | 04710-04230 | | HOSE,LH VM370 | ﾎｰｽ | 1 | |
| - | 04710-04230 | | HOSE,LH VM375 | ﾎｰｽ | 1 | |
| - | 04710-04250 | | HOSE,LH VM400 | ﾎｰｽ | 1 | |
| - | 04710-04260 | | HOSE,LH VM425 | ﾎｰｽ | 1 | |
| - | 04710-04275 | | HOSE,LH VM450 | ﾎｰｽ | 1 | |
| - | 04710-04285 | | HOSE,LH VM475 | ﾎｰｽ | 1 | |
| - | 04710-04300 | | HOSE,LH VM500 | ﾎｰｽ | 1 | |

# FIG.205 MAST PIPING [VM2N5]

(M7028420) マストパイピング

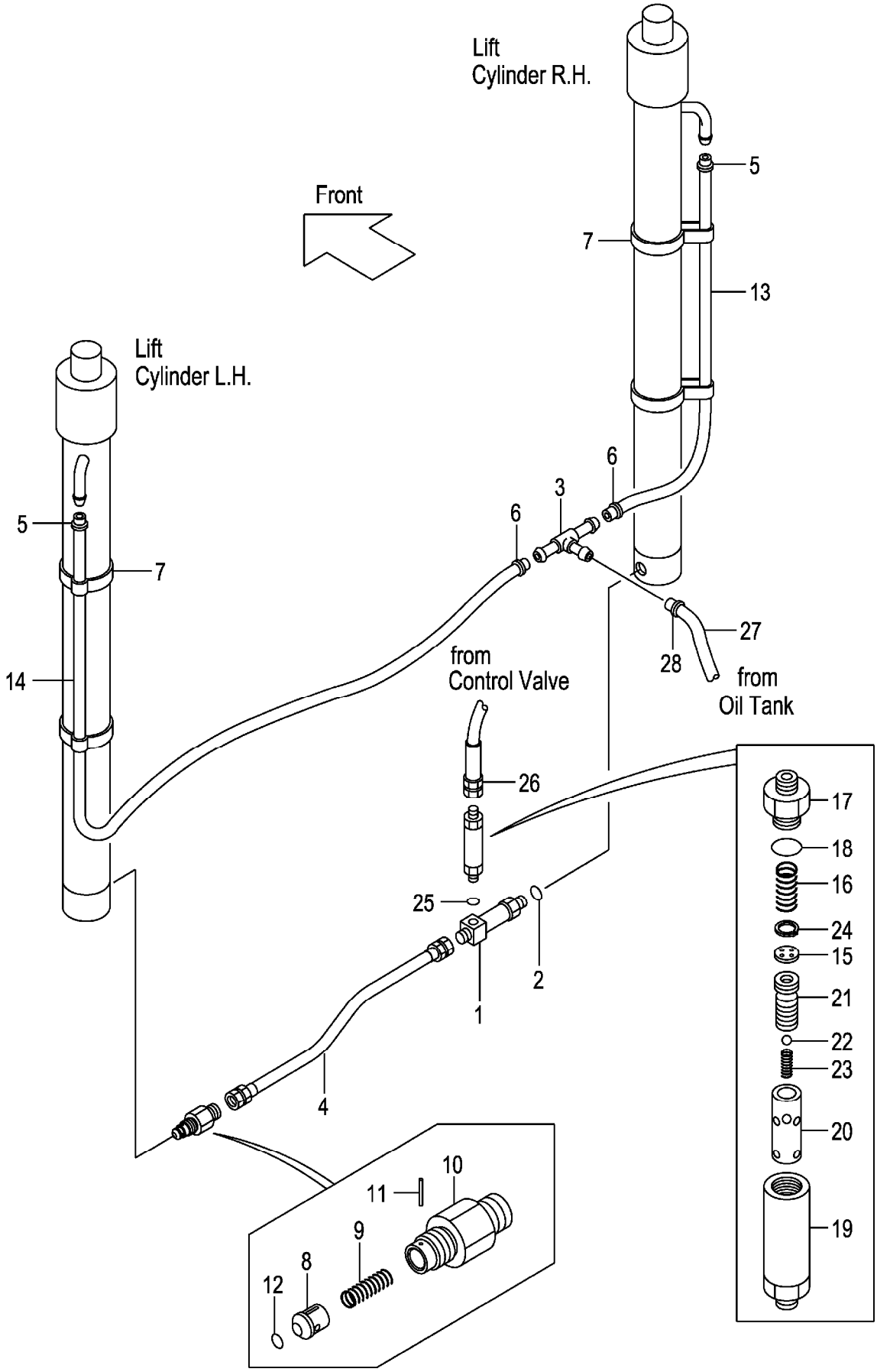

A:VM2N5(FG20C13-FD20T13) C:VM2N5(F(H)G20C3-F(H)D20W3)
B:VM2N5(FG25C13-FD25T13) D:VM2N5(F(H)G25C3-F(H)D25W3)

(M7028420)

| Item No | Part No. | Mark | Description | | Req'd | Remarks : Serial No. |
|---|---|---|---|---|---|---|
| - | 04710-04330 | | HOSE,LH VM550 | ﾎｰｽ | 1 | |
| - | 04710-04355 | | HOSE,LH VM600 | ﾎｰｽ | 1 | |
| A3 | 234A8-41001 | | REGURATOR-ASSY,FLOW | ﾌﾛｰﾚｷﾞｭﾚｰﾀｱｯｾﾝ | 1 | INC.15-24 |
| 15 | NO PART NO. | # | PLATE | ﾌﾟﾚｰﾄ | 1 | |
| 16 | 27979-43101 | | SPRING | ｽﾌﾟﾘﾝｸﾞ | 1 | |
| 17 | NO PART NO. | # | NIPPLE | ﾆｯﾌﾟﾙ | 1 | |
| 18 | 03320-00280 | | O-RING | Oﾘﾝｸﾞ | 1 | |
| 19 | NO PART NO. | # | CASE | ｹｰｽ | 1 | |
| 20 | NO PART NO. | # | SLEEVE | ｽﾘｰﾌﾞ | 1 | |
| 21 | NO PART NO. | # | PISTON | ﾋﾟｽﾄﾝ | 1 | |
| 22 | 24459-42951 | | BALL,NYLON | ﾎﾞｰﾙ | 1 | |
| 23 | 214A8-44151 | | SPRING | ｽﾌﾟﾘﾝｸﾞ | 1 | |
| 24 | 02110-00018 | | RING,SNAP | ｽﾅｯﾌﾟﾘﾝｸﾞ | 1 | |
| 25 | 03320-00180 | | O-RING | Oﾘﾝｸﾞ | 1 | |
| 26 | 234A8-02101 | | HOSE | ﾎｰｽ | 1 | |
| 27 | 04710-04130 | | HOSE | ﾎｰｽ | 1 | |
| 28 | 04911-00021 | | CLIP | ｸﾘｯﾌﾟ | 2 | |

# M E M O

# M E M O

# FIG.206 FORK [VFM2N5]

(M7028140) フォーク

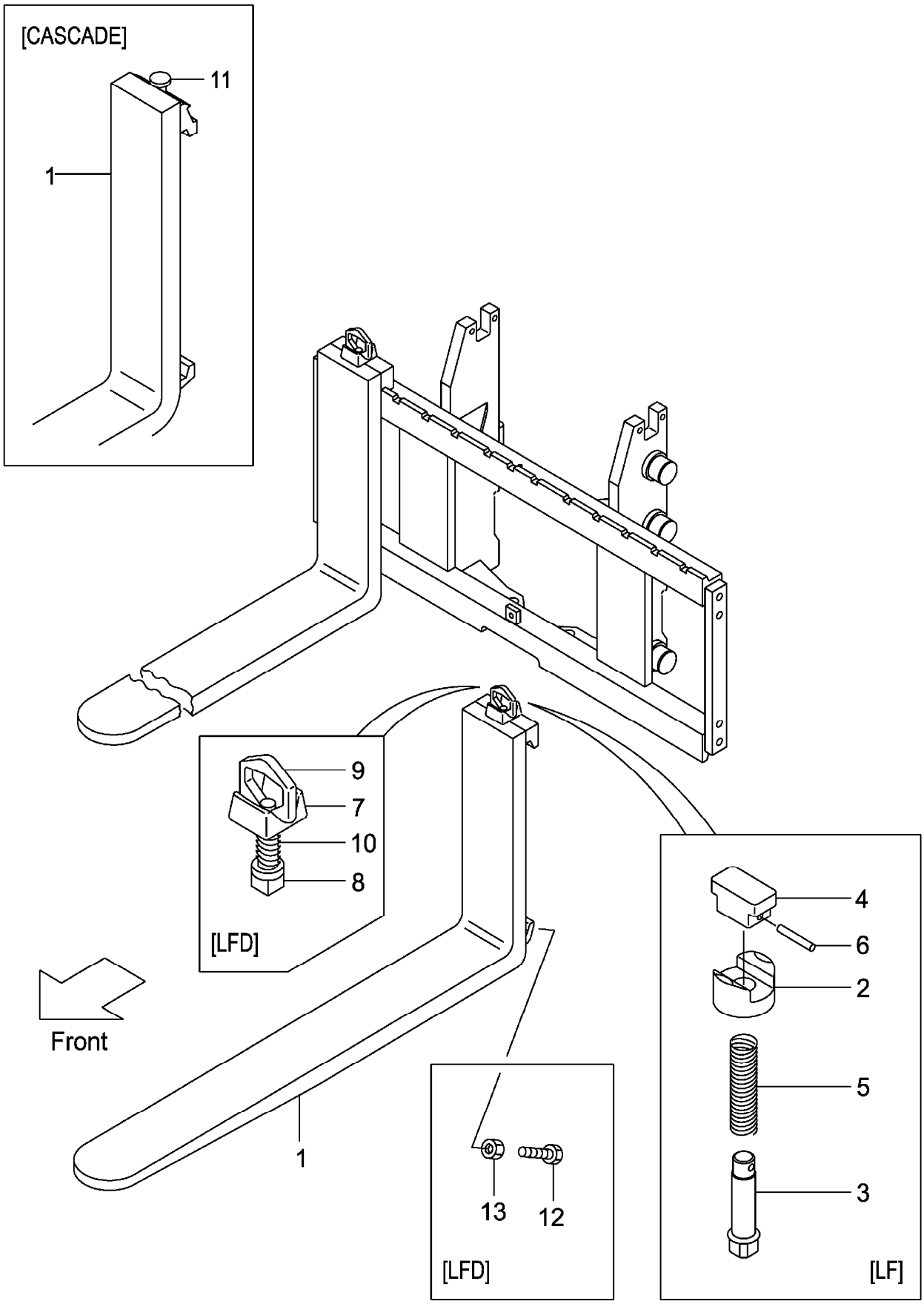

A:VFM2N5(2T)
B:VFM2N5(2.5T)

| Item No | Part No. | Mark | Description | Req'd | Remarks : Serial No. |
|---|---|---|---|---|---|
| 1 | 231A8-10101 | | FORK フォーク | 2 | A<br>(L=920) INC.2-6 |
| - | 214A8-10512 | | FORK フォーク | 2 | B<br>(L=1070) INC.2-6 |
| - | 231A8-10171 | | FORK フォーク | 2 | A<br>[LF090] INC.2-6 |
| - | 231F8-10571 | | FORK フォーク | 2 | B<br>[LF090] INC.2-6 |
| - | 231A8-10101 | | FORK フォーク | 2 | A<br>[LF092] INC.2-6 |
| - | 231F8-10501 | | FORK フォーク | 2 | B<br>[LF092] INC.2-6 |
| - | 214A8-10512 | | FORK フォーク | 2 | [EX] INC.2-6 |
| - | 214A8-10582 | | FORK フォーク | 2 | [LF100] INC.2-6 |
| - | 214A8-10512 | | FORK フォーク | 2 | [LF107] INC.2-6 |
| - | 214A8-10592 | | FORK フォーク | 2 | [LF110] INC.2-6 |
| - | 214A8-10602 | | FORK フォーク | 2 | [LF120] INC.2-6 |
| - | 214A8-10522 | | FORK フォーク | 2 | [LF122] INC.2-6 |
| - | 214A8-10612 | | FORK フォーク | 2 | [LF130] INC.2-6 |
| - | 214A8-10532 | | FORK フォーク | 2 | [LF137] INC.2-6 |
| - | 214A8-10622 | | FORK フォーク | 2 | [LF140] INC.2-6 |
| - | 214A8-10632 | | FORK フォーク | 2 | [LF150] INC.2-6 |
| - | 214A8-10542 | | FORK フォーク | 2 | [LF152] INC.2-6 |
| - | 214A8-10642 | | FORK フォーク | 2 | [LF160] INC.2-6 |
| - | 214A8-10552 | | FORK フォーク | 2 | [LF167] INC.2-6 |
| - | 214A8-10653 | | FORK フォーク | 2 | [LF170] INC.2-6 |
| - | 214A8-10663 | | FORK フォーク | 2 | [LF180] INC.2-6 |
| - | 214A8-10563 | | FORK フォーク | 2 | [LF182] INC.2-6 |
| - | 214A8-10673 | | FORK フォーク | 2 | [LF190] INC.2-6 |
| - | 214A8-10683 | | FORK フォーク | 2 | [LF200] INC.2-6 |
| - | 234A8-10571 | | FORK フォーク | 2 | [LFD090] INC.7-10 |
| - | 234A8-10501 | | FORK フォーク | 2 | [LFD092] INC.7-10 |
| - | 234A8-10581 | | FORK フォーク | 2 | [LFD100] INC.7-10 |
| - | 234A8-10511 | | FORK フォーク | 2 | [LFD107] INC.7-10 |
| - | 234A8-10591 | | FORK フォーク | 2 | [LFD110] INC.7-10 |
| - | 234A8-10601 | | FORK フォーク | 2 | [LFD120] INC.7-10 |
| - | 234A8-10521 | | FORK フォーク | 2 | [LFD122] INC.7-10 |
| - | 234A8-10611 | | FORK フォーク | 2 | [LFD130] INC.7-10 |
| - | 234A8-10531 | | FORK フォーク | 2 | [LFD137] INC.7-10 |
| - | 234A8-10621 | | FORK フォーク | 2 | [LFD140] INC.7-10 |
| - | 234A8-10631 | | FORK フォーク | 2 | [LFD150] INC.7-10 |
| - | 234A8-10541 | | FORK フォーク | 2 | [LFD152] INC.7-10 |
| - | 234A8-10641 | | FORK フォーク | 2 | [LFD160] INC.7-10 |
| - | 234A8-10551 | | FORK フォーク | 2 | [LFD167] INC.7-10 |
| - | 234A8-10652 | | FORK フォーク | 2 | [LFD170] INC.7-10 |
| - | 234A8-10662 | | FORK フォーク | 2 | [LFD180] INC.7-10 |
| - | 234A8-10562 | | FORK フォーク | 2 | [LFD182] INC.7-10 |
| - | 234A8-10672 | | FORK フォーク | 2 | [LFD190] INC.7-10 |
| - | 234A8-10682 | | FORK フォーク | 2 | [LFD200] INC.7-10 |
| - | 22N58-10501 | | FORK フォーク | 2 | [LF092/CASCADE] INC.11 |

# FIG.206 FORK [VFM2N5]

(M7028140) フォーク

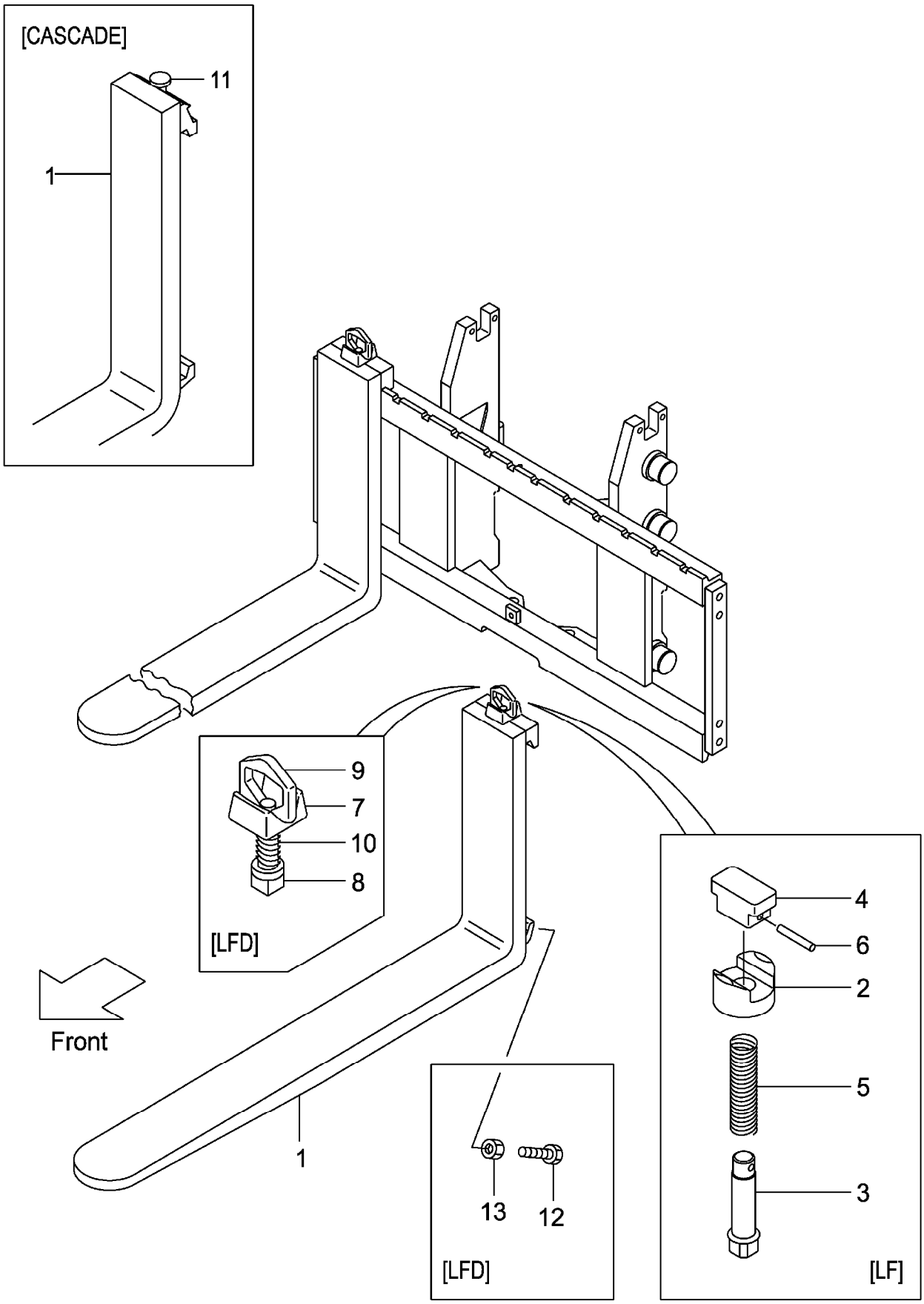

A:VFM2N5(2T)
B:VFM2N5(2.5T)

(M7028140)

| Item No | Part No. | Mark | Description | | Req'd | Remarks : Serial No. |
|---|---|---|---|---|---|---|
| - | 22N58-10511 | | FORK | ﾌｫｰｸ | 2 | [LF107/CASCADE] INC.11 |
| - | 22N58-10521 | | FORK | ﾌｫｰｸ | 2 | [LF122/CASCADE] INC.11 |
| 2 | 216G8-12921 | | HOLDER | ﾎﾙﾀﾞ | 2 | [LF] |
| 3 | 231A8-12001 | | PIN | ﾋﾟﾝ | 2 | [LF] |
| 4 | 231A8-12011 | | KNOB | ﾉﾌﾞ | 2 | [LF] |
| 5 | 231A8-12021 | | SPRING | ｽﾌﾟﾘﾝｸﾞ | 2 | [LF] |
| 6 | 231A8-12031 | | PIN,SPRING | ﾋﾟﾝ | 2 | [LF] |
| A1 | 214A8-11001 | | STOPPER-ASSY,FORK | ﾌｫｰｸｽﾄｯﾊﾟｱｯｾﾝ | 2 | [LFD] INC.7-10 |
| 7 | 214A8-12001 | | HEAD | ﾍｯﾄﾞ | 2 | [LFD] |
| 8 | 214A8-12011 | | STOPPER | ｽﾄｯﾊﾟ | 2 | [LFD] |
| 9 | 214A8-12021 | | HANDLE | ﾊﾝﾄﾞﾙ | 2 | [LFD] |
| 10 | 214A8-12031 | | SPRING | ｽﾌﾟﾘﾝｸﾞ | 2 | [LFD] |
| 11 | W-K2PK-M | | KIT,PIN,STOPPER | ｽｯﾄﾊﾟﾋﾟﾝｷｯﾄ | 2 | [CASCADE] |
| 12 | 216G8-12101 | | BOLT | ﾎﾞﾙﾄ | 4 | [LFD] |
| 13 | 01402-00010 | | NUT | ﾅｯﾄ | 4 | [LFD] |

# M E M O

# M E M O

## FIG.207 LIFT BRACKET [VFM2N5]

(M7020610) ﾘﾌﾄﾌﾞﾗｹｯﾄ

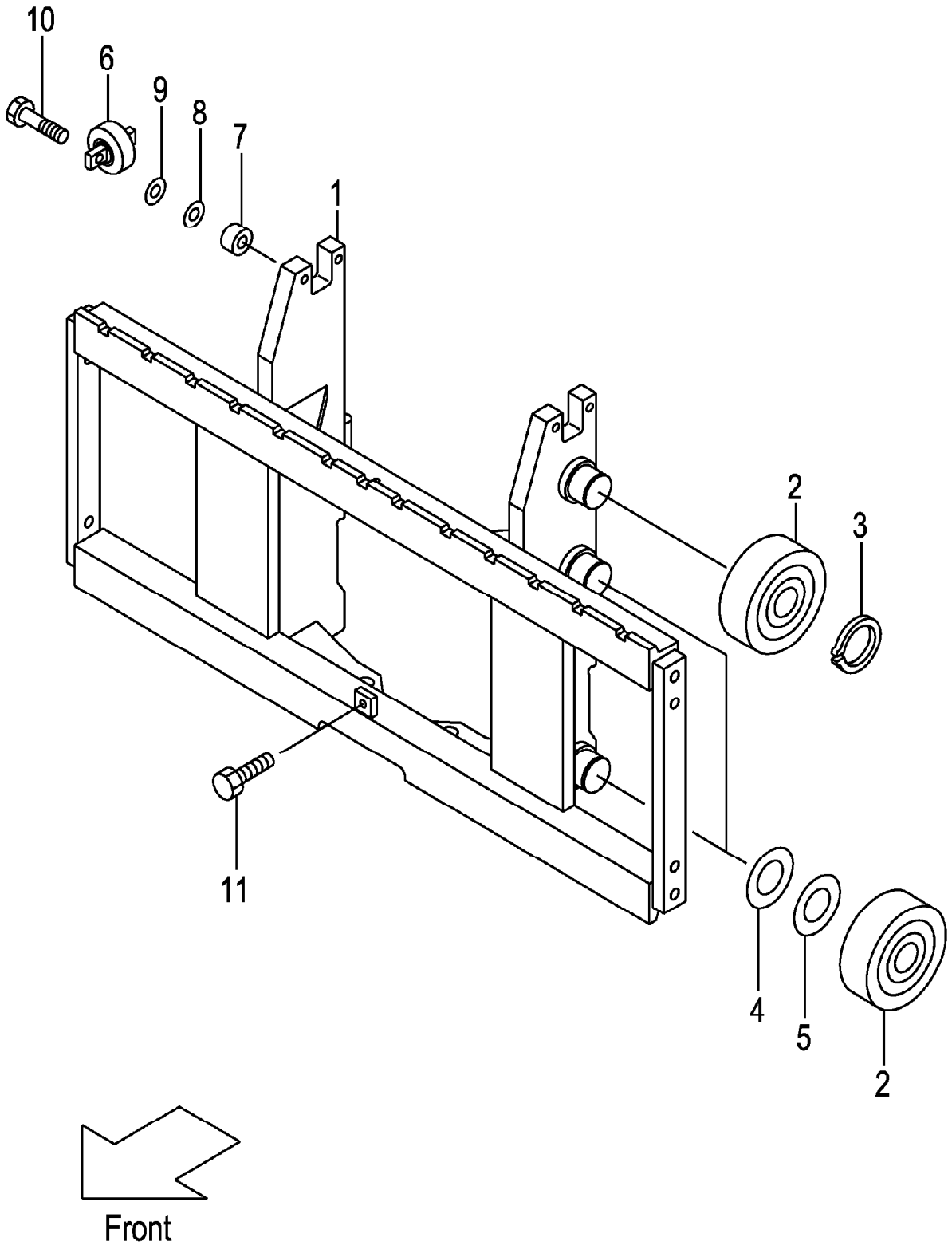

A:VFM2N5(2T)
B:VFM2N5(2.5T)

| Item No | Part No. | Mark | Description | | Req'd | Remarks : Serial No. |
|---|---|---|---|---|---|---|
| 1 | 22N50-60201 | | BRACKET,LIFT | ﾌﾞﾗｹｯﾄ | 1 | |
| - | 52N51-61201 | | BRACKET,LIFT | ﾌﾞﾗｹｯﾄ | 1 | [WFX110][WFX114][WFX127] [WFX135][WFX138] |
| - | 52N51-61211 | | BRACKET,LIFT | ﾌﾞﾗｹｯﾄ | 1 | [WFX135][WFX138][WFX145] [WFX146][WFX154][WFX180] |
| 2 | 277P8-22051 | | ROLLER,END,119.0 | ﾛｰﾗ | 6 | |
| - | 577P3-74001 | | ROLLER,END,119.0 | ﾛｰﾗ | 6 | [FC][CS35][FCS35][FCS45] [FCS55] |
| - | 277P8-22061 | | ROLLER,END,119.5 | ﾛｰﾗ | (6) | |
| - | 577P3-74011 | | ROLLER,END,119.5 | ﾛｰﾗ | (6) | [FC][CS35][FCS35][FCS45] [FCS55] |
| 3 | 02100-00045 | | RING,SNAP | ｽﾅｯﾌﾟﾘﾝｸﾞ | 2 | |
| 4 | 277P8-22071 | | SHIM,T-0.5 | ｼﾑ | 5 | |
| 5 | 277P8-22081 | | SHIM,T-1.0 | ｼﾑ | 5 | |
| 6 | 22N58-32701 | | ROLLER,SIDE | ﾛｰﾗ | 2 | |
| - | 52N53-74001 | | ROLLER,SIDE | ﾛｰﾗ | 2 | [FC][CS35][FCS35][FCS45] [FCS55] |
| 7 | 22N58-32711 | | SPACER | ｽﾍﾟｰｻ | 4 | |
| 8 | 22018-30261 | | SHIM | ｼﾑ | 8 | |
| 9 | 22018-30121 | | SHIM | ｼﾑ | 4 | |
| 10 | 01103-10045 | | BOLT | ﾎﾞﾙﾄ | 4 | |
| 11 | 01184-12025 | | BOLT | ﾎﾞﾙﾄ | 1 | |

# FIG.208 BACKREST [VFM2N5]

(M7028250) ﾊﾞｯｸﾚｽﾄ

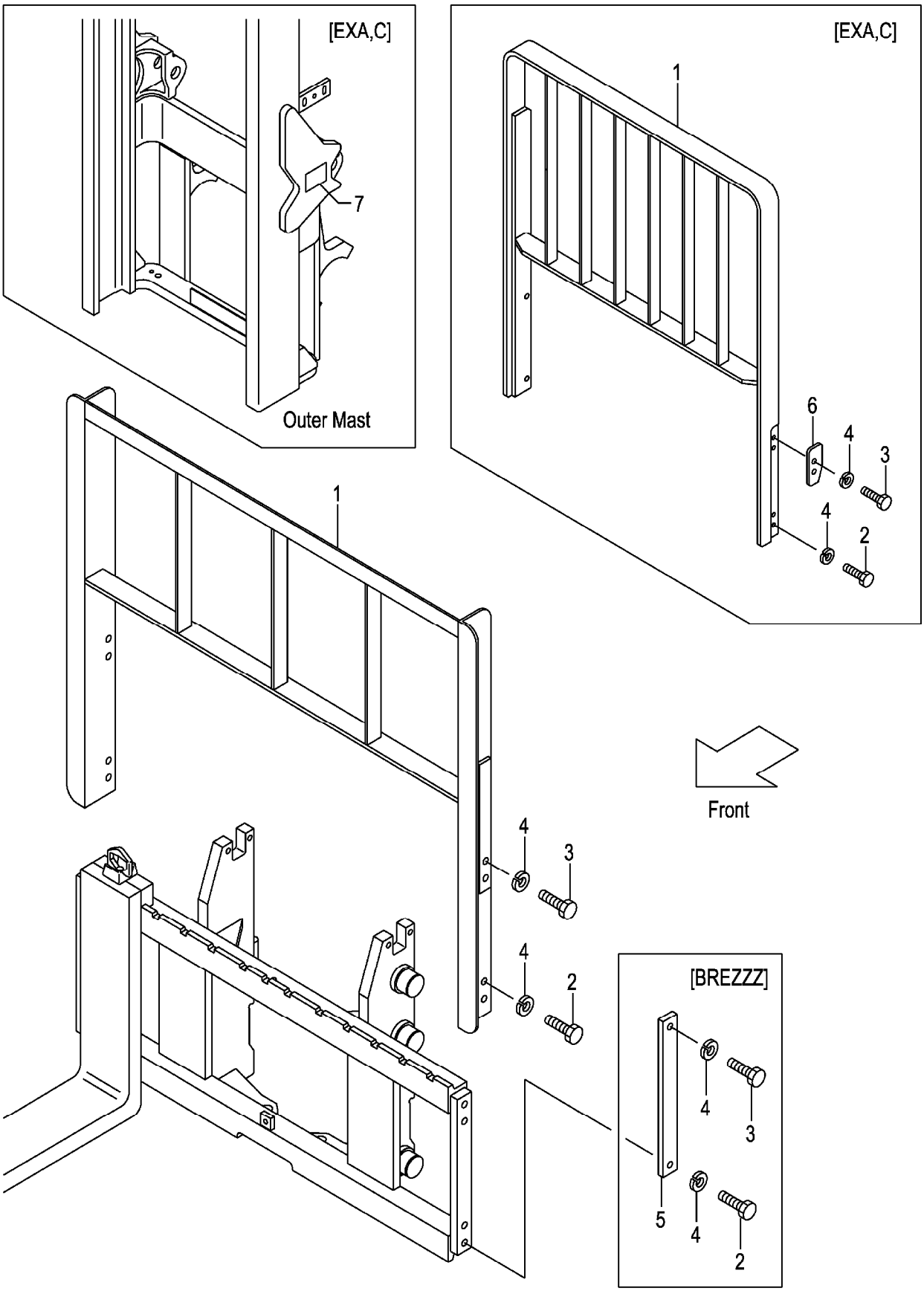

A:VFM2N5(2T)
B:VFM2N5(2.5T)

| Item No | Part No. | Mark | Description | | Req'd | Remarks : Serial No. |
|---|---|---|---|---|---|---|
| 1 | 234A8-22202 | | BACKREST | ﾊﾞｯｸﾚｽﾄ | 1 | |
| - | 239A8-20101 | | BACKREST | ﾊﾞｯｸﾚｽﾄ | 1 | [HBR110] |
| - | 239A8-20111 | | BACKREST | ﾊﾞｯｸﾚｽﾄ | 1 | [HBR120] |
| - | 239A8-20121 | | BACKREST | ﾊﾞｯｸﾚｽﾄ | 1 | [HBR130] |
| - | 239A8-20131 | | BACKREST | ﾊﾞｯｸﾚｽﾄ | 1 | [HBR140] |
| - | 239A8-20141 | | BACKREST | ﾊﾞｯｸﾚｽﾄ | 1 | [HBR150] |
| - | 534A1-64402 | | BACKREST | ﾊﾞｯｸﾚｽﾄ | 1 | [WFX135] |
| - | 534A1-64412 | | BACKREST | ﾊﾞｯｸﾚｽﾄ | 1 | [WFX146] |
| - | 534A2-74001 | | BACKREST | ﾊﾞｯｸﾚｽﾄ | 1 | [EXA][EXC] |
| - | 534A2-74101 | | BACKREST | ﾊﾞｯｸﾚｽﾄ | 1 | [EXA/WFX135][EXC/WFX135] |
| - | 534A2-74201 | | BACKREST | ﾊﾞｯｸﾚｽﾄ | 1 | [EXA/WFX146][EXC/WFX146] |
| 2 | 01100-14025 | | BOLT | ﾎﾞﾙﾄ | 4 | |
| - | 01100-14025 | | BOLT | ﾎﾞﾙﾄ | 4 | [EXA][EXC] |
| - | 01100-14030 | | BOLT | ﾎﾞﾙﾄ | 4 | [HBR] |
| - | 01100-14025 | | BOLT | ﾎﾞﾙﾄ | 2 | [BREZZZ] |
| 3 | 01100-14030 | | BOLT | ﾎﾞﾙﾄ | 4 | |
| - | 01100-14035 | | BOLT | ﾎﾞﾙﾄ | 4 | [EXA][EXC] |
| - | 01100-14030 | | BOLT | ﾎﾞﾙﾄ | 4 | [HBR] |
| - | 01100-14025 | | BOLT | ﾎﾞﾙﾄ | 2 | [BREZZZ] |
| 4 | 02010-00014 | | WASHER | ﾜｯｼｬ | 8 | |
| - | 02010-00014 | | WASHER | ﾜｯｼｬ | 4 | [BREZZZ] |
| 5 | 23659-42161 | | PLATE,SIDE | ﾌﾟﾚｰﾄ | 2 | [BREZZZ] |
| 6 | 534A2-74051 | | PLATE,STOPPER | ﾌﾟﾚｰﾄ | 2 | [EXA][EXC] |
| 7 | 534A2-74301 | | DECAL,CAUTION | ﾃﾞｶﾙ | 1 | [EXA][EXC] |

# FIG.209 MAST [VFM2N5]

(M7020410) マスト

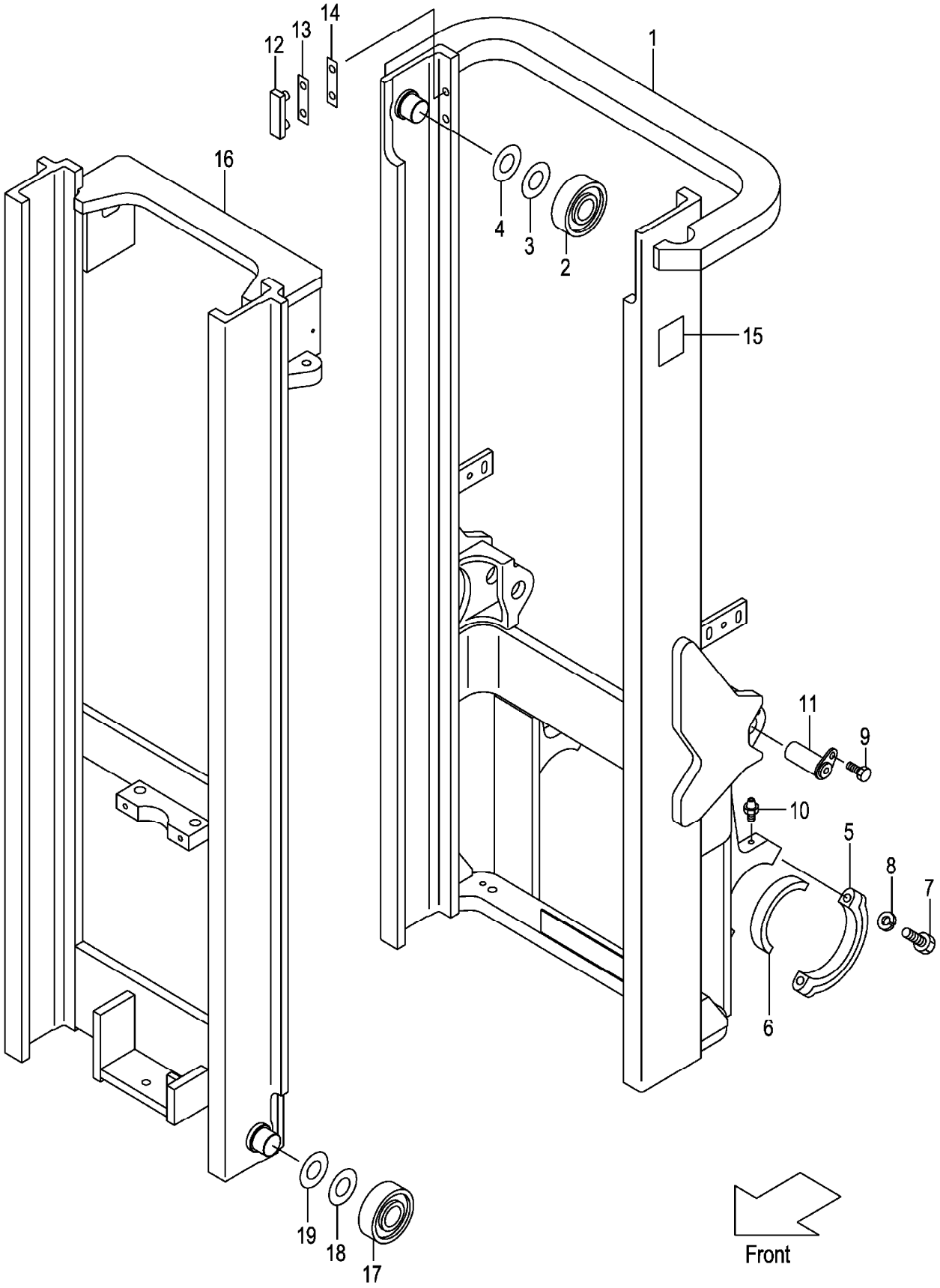

A:VFM2N5(2T)
B:VFM2N5(2.5T)

| Item No | Part No. | Mark | Description | | Req'd | Remarks : Serial No. |
|---|---|---|---|---|---|---|
| 1 | 22N50-40211 | | MAST,OUTER VFM200 | ｱｳﾀﾏｽﾄ | 1 | |
| - | 22N50-40221 | | MAST,OUTER VFM225 | ｱｳﾀﾏｽﾄ | 1 | |
| - | 22N50-40231 | | MAST,OUTER VFM250 | ｱｳﾀﾏｽﾄ | 1 | |
| - | 22N50-40241 | | MAST,OUTER VFM270 | ｱｳﾀﾏｽﾄ | 1 | |
| - | 22N50-40251 | | MAST,OUTER VFM275 | ｱｳﾀﾏｽﾄ | 1 | |
| - | 22N50-40201 | | MAST,OUTER VFM300 | ｱｳﾀﾏｽﾄ | 1 | |
| - | 22N50-40261 | | MAST,OUTER VFM325 | ｱｳﾀﾏｽﾄ | 1 | |
| - | 22N50-40271 | | MAST,OUTER VFM330 | ｱｳﾀﾏｽﾄ | 1 | |
| - | 22N50-40281 | | MAST,OUTER VFM350 | ｱｳﾀﾏｽﾄ | 1 | |
| - | 22N50-40291 | | MAST,OUTER VFM366 | ｱｳﾀﾏｽﾄ | 1 | |
| - | 22N50-40301 | | MAST,OUTER VFM370 | ｱｳﾀﾏｽﾄ | 1 | |
| - | 22N50-40311 | | MAST,OUTER VFM375 | ｱｳﾀﾏｽﾄ | 1 | |
| - | 22N50-40321 | | MAST,OUTER VFM400 | ｱｳﾀﾏｽﾄ | 1 | |
| - | 22N50-40331 | | MAST,OUTER VFM425 | ｱｳﾀﾏｽﾄ | 1 | |
| - | 22N50-40341 | | MAST,OUTER VFM450 | ｱｳﾀﾏｽﾄ | 1 | |
| - | 22N50-40351 | | MAST,OUTER VFM475 | ｱｳﾀﾏｽﾄ | 1 | |
| - | 22N50-40361 | | MAST,OUTER VFM500 | ｱｳﾀﾏｽﾄ | 1 | |
| - | 22N50-40371 | | MAST,OUTER VFM550 | ｱｳﾀﾏｽﾄ | 1 | |
| - | 22N50-40381 | | MAST,OUTER VFM600 | ｱｳﾀﾏｽﾄ | 1 | |
| 2 | 277P8-22051 | | ROLLER,END,119.0 | ﾛｰﾗ | 2 | |
| - | 577P3-74001 | | ROLLER,END,119.0 | ﾛｰﾗ | 2 | [FC][CS35][FCS35][FCS45] [FCS55] |
| 3 | 277P8-22071 | | SHIM,T-0.5 | ｼﾑ | 12 | |
| 4 | 277P8-22081 | | SHIM,T-1.0 | ｼﾑ | 12 | |
| 5 | 277P8-32701 | | CAP | ｷｬｯﾌﾟ | 2 | |
| 6 | 214A8-02201 | | BUSHING | ﾌﾞｯｼﾝｸﾞ | 2 | |
| 7 | 01103-16065 | | BOLT | ﾎﾞﾙﾄ | 4 | |
| 8 | 02011-00016 | | WASHER | ﾜｯｼｬ | 4 | |
| 9 | 216G8-52301 | | BOLT & WASHER | ﾎﾞﾙﾄ & ﾜｯｼｬ | 2 | |
| 10 | 04901-00100 | | FITTING | ﾌｨｯﾃｨﾝｸﾞ | 2 | |
| 11 | 272K8-52201 | | PIN | ﾋﾟﾝ | 2 | |
| 12 | 216G8-33401 | | SLIPPER | ｽﾘｯﾊﾟ | 2 | |
| 13 | 216G8-33361 | | SHIM,T-0.5 | ｼﾑ | 8 | |
| 14 | 216G8-33371 | | SHIM,T-1.0 | ｼﾑ | 4 | |
| 15 | 23678-06002 | | PLATE,NAME | ﾌﾟﾚｰﾄ | 1 | |
| 16 | 22N50-40411 | | MAST,INNER VFM200 | ｲﾝﾅﾏｽﾄ | 1 | |
| - | 22N50-40421 | | MAST,INNER VFM225 | ｲﾝﾅﾏｽﾄ | 1 | |
| - | 22N50-40431 | | MAST,INNER VFM250 | ｲﾝﾅﾏｽﾄ | 1 | |
| - | 22N50-40441 | | MAST,INNER VFM270 | ｲﾝﾅﾏｽﾄ | 1 | |
| - | 22N50-40451 | | MAST,INNER VFM275 | ｲﾝﾅﾏｽﾄ | 1 | |
| - | 22N50-40401 | | MAST,INNER VFM300 | ｲﾝﾅﾏｽﾄ | 1 | |
| - | 22N50-40461 | | MAST,INNER VFM325 | ｲﾝﾅﾏｽﾄ | 1 | |
| - | 22N50-40471 | | MAST,INNER VFM330 | ｲﾝﾅﾏｽﾄ | 1 | |
| - | 22N50-40481 | | MAST,INNER VFM350 | ｲﾝﾅﾏｽﾄ | 1 | |
| - | 22N50-40491 | | MAST,INNER VFM366 | ｲﾝﾅﾏｽﾄ | 1 | |
| - | 22N50-40501 | | MAST,INNER VFM370 | ｲﾝﾅﾏｽﾄ | 1 | |
| - | 22N50-40511 | | MAST,INNER VFM375 | ｲﾝﾅﾏｽﾄ | 1 | |
| - | 22N50-40521 | | MAST,INNER VFM400 | ｲﾝﾅﾏｽﾄ | 1 | |
| - | 22N50-40531 | | MAST,INNER VFM425 | ｲﾝﾅﾏｽﾄ | 1 | |
| - | 22N50-40541 | | MAST,INNER VFM450 | ｲﾝﾅﾏｽﾄ | 1 | |

# FIG.209 MAST [VFM2N5]

(M7020410) マスト

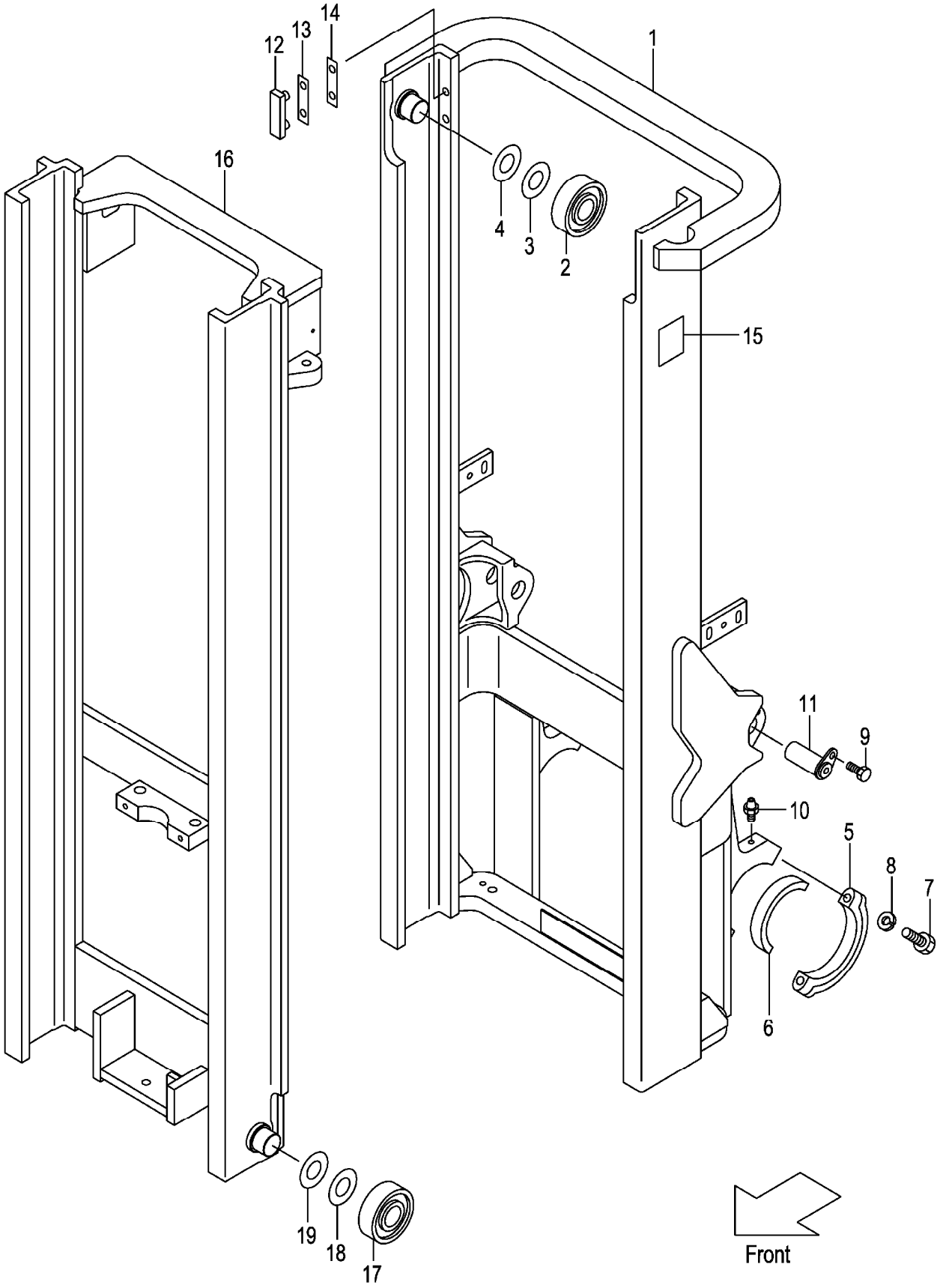

A:VFM2N5(2T)
B:VFM2N5(2.5T)

| Item No | Part No. | Mark | Description | | Req'd | Remarks : Serial No. |
|---|---|---|---|---|---|---|
| - | 22N50-40551 | | MAST,INNER VFM475 | ｲﾝﾅﾏｽﾄ | 1 | |
| - | 22N50-40561 | | MAST,INNER VFM500 | ｲﾝﾅﾏｽﾄ | 1 | |
| - | 22N50-40571 | | MAST,INNER VFM550 | ｲﾝﾅﾏｽﾄ | 1 | |
| - | 22N50-40581 | | MAST,INNER VFM600 | ｲﾝﾅﾏｽﾄ | 1 | |
| 17 | 277P8-22051 | | ROLLER,END,119.0 | ﾛｰﾗ | 2 | |
| - | 577P3-74001 | | ROLLER,END,119.0 | ﾛｰﾗ | 2 | [FC][CS35][FCS35][FCS45] [FCS55] |
| - | 277P8-22061 | | ROLLER,END,119.5 | ﾛｰﾗ | (2) | |
| - | 577P3-74011 | | ROLLER,END,119.5 | ﾛｰﾗ | (2) | [FC][CS35][FCS35][FCS45] [FCS55] |
| 18 | 277P8-22071 | | SHIM,T-0.5 | ｼﾑ | 12 | |
| 19 | 277P8-22081 | | SHIM,T-1.0 | ｼﾑ | 12 | |

# M E M O

# M E M O

# FIG.210 TILT GAUGE [VFM2N5/(TG,PPC,PR,PRC,MPC)]

(M7020420) ﾃｨﾙﾄｹﾞｰｼﾞ

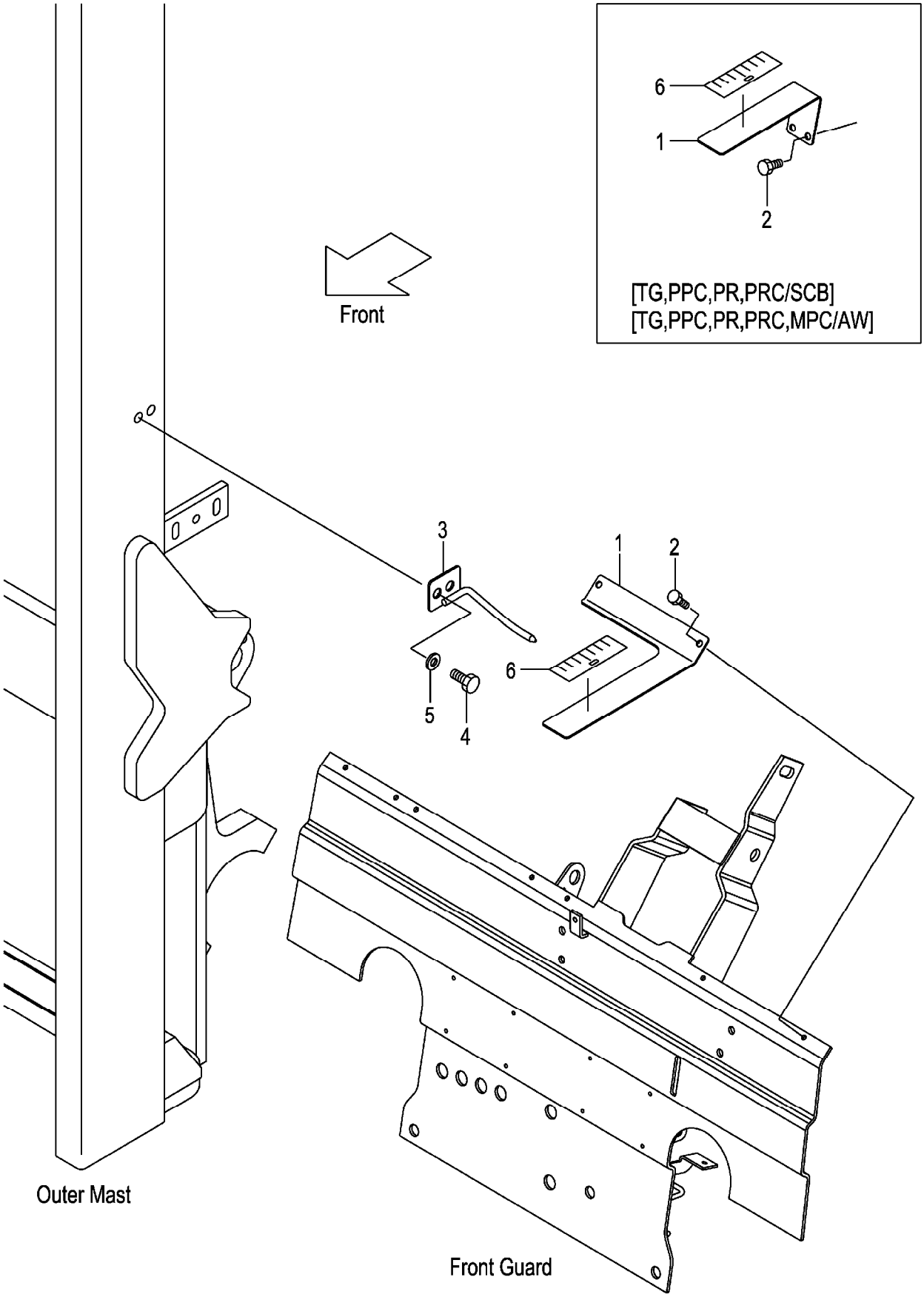

A:VFM2N5(2T)
B:VFM2N5(2.5T)

| Item No | Part No. | Mark | Description | | Req'd | Remarks : Serial No. |
|---|---|---|---|---|---|---|
| 1 | 62A89-21811 | | GAUGE,TILT | ｹﾞｰｼﾞ | 1 | [VFM250-600/ (TG,PRC,PPC,MPC,PR)] |
| - | 62A89-21831 | | GAUGE,TILT | ｹﾞｰｼﾞ | 1 | [VFM250-600/SCB/ (TG,PR,PPC,PRC)] |
| - | 62A89-21831 | | GAUGE,TILT | ｹﾞｰｼﾞ | 1 | [VFM250-600/AW/ (TG,PR,PPC,PRC,MPC)] |
| 2 | 01183-06020 | | BOLT | ﾎﾞﾙﾄ | 2 | [VFM250-600/ (TG,PRC,PPC,MPC,PR)] |
| - | 01183-06020 | | BOLT | ﾎﾞﾙﾄ | 2 | [VFM250-600/SCB/ (TG,PR,PPC,PRC)] |
| - | 01183-06020 | | BOLT | ﾎﾞﾙﾄ | 2 | [VFM250-600/AW/ (TG,PR,PPC,PRC,MPC)] |
| 3 | 62A89-21851 | | INDICATOR | ｲﾝｼﾞｹｰﾀ | 1 | [VFM250-600/ (TG,PRC,PPC,MPC,PR)] |
| - | 62A89-21851 | | INDICATOR | ｲﾝｼﾞｹｰﾀ | 1 | [VFM250-600/SCB/ (TG,PR,PPC,PRC)] |
| - | 62A89-21851 | | INDICATOR | ｲﾝｼﾞｹｰﾀ | 1 | [VFM250-600/AW/ (TG,PR,PPC,PRC,MPC)] |
| 4 | 01184-12025 | | BOLT | ﾎﾞﾙﾄ | 2 | [VFM250-600/ (TG,PRC,PPC,MPC,PR)] |
| - | 01184-12025 | | BOLT | ﾎﾞﾙﾄ | 2 | [VFM250-600/SCB/ (TG,PR,PPC,PRC)] |
| - | 01184-12025 | | BOLT | ﾎﾞﾙﾄ | 2 | [VFM250-600/AW/ (TG,PR,PPC,PRC,MPC)] |
| 5 | 02000-00012 | | WASHER | ﾜｯｼｬ | 2 | [VFM250-600/ (TG,PRC,PPC,MPC,PR)] |
| - | 02000-00012 | | WASHER | ﾜｯｼｬ | 2 | [VFM250-600/SCB/ (TG,PR,PPC,PRC)] |
| - | 02000-00012 | | WASHER | ﾜｯｼｬ | 2 | [VFM250-600/AW/ (TG,PR,PPC,PRC,MPC)] |
| 6 | 62459-23371 | | SEAL,GAUGE | ｼｰﾙ | 1 | [VFM250-600/ (TG,PRC,PPC,MPC,PR)] |
| - | 62459-23371 | | SEAL,GAUGE | ｼｰﾙ | 1 | [VFM250-600/SCB/ (TG,PR,PPC,PRC)] |
| - | 62459-23371 | | SEAL,GAUGE | ｼｰﾙ | 1 | [VFM250-600/AW/ (TG,PR,PPC,PRC,MPC)] |

# FIG.211 LIFT CYLINDER (FRONT) [VFM2N5]

(M7020510) リフトシリンダ(フロント)

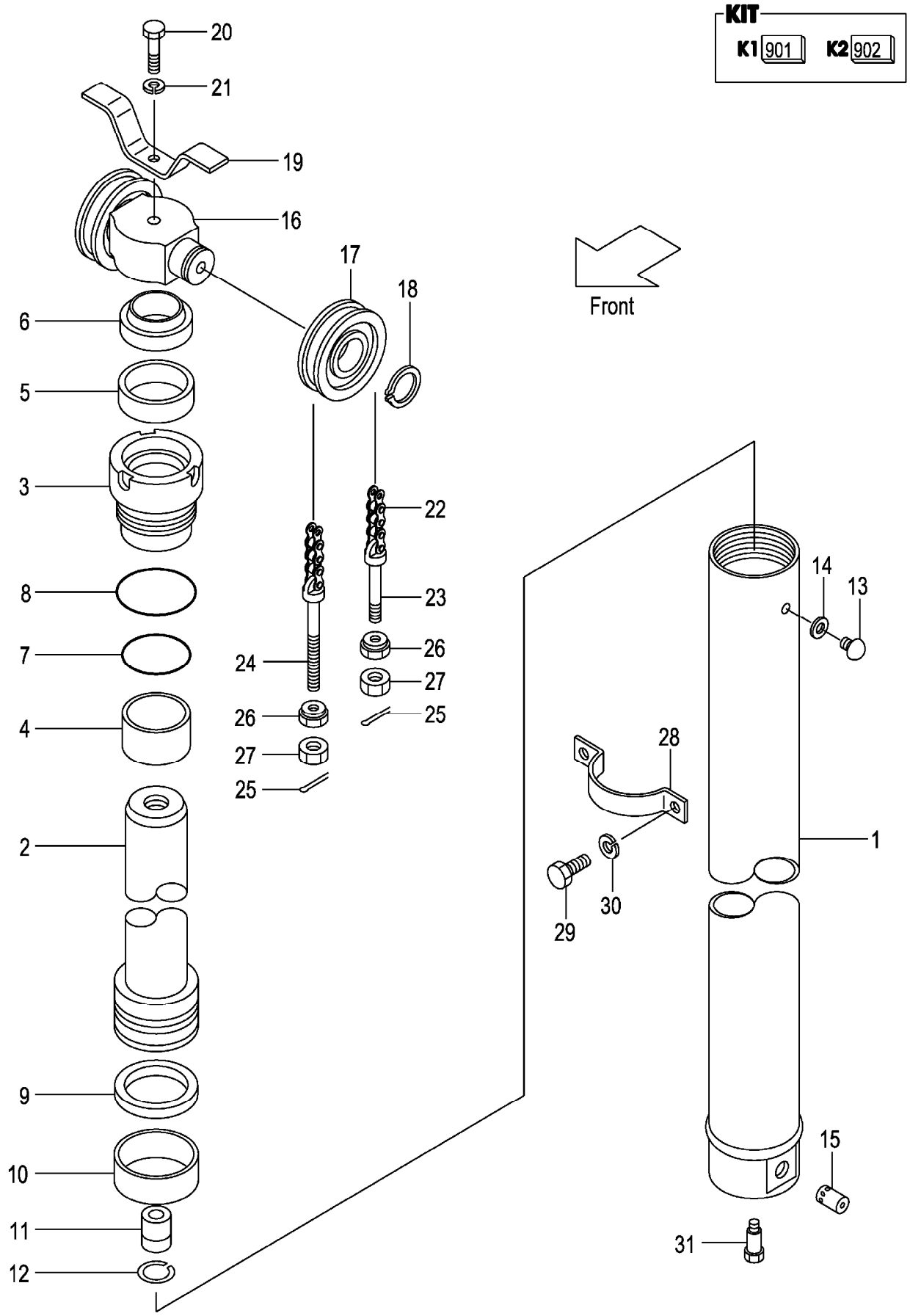

A:VFM2N5(2T)
B:VFM2N5(2.5T)

| Item No | Part No. | Mark | Description | | Req'd | Remarks : Serial No. |
|---|---|---|---|---|---|---|
| A1 | 22N50-50511 | | CYL-ASSY,LIFT VFM200 | ﾘﾌﾄｼﾘﾝﾀﾞｱｯｾﾝ | 1 | INC.1-15 |
| - | 22N50-50521 | | CYL-ASSY,LIFT VFM225 | ﾘﾌﾄｼﾘﾝﾀﾞｱｯｾﾝ | 1 | INC.1-15 |
| - | 22N50-50531 | | CYL-ASSY,LIFT VFM250 | ﾘﾌﾄｼﾘﾝﾀﾞｱｯｾﾝ | 1 | INC.1-15 |
| - | 212T0-50511 | | CYL-ASSY,LIFT VFM270 | ﾘﾌﾄｼﾘﾝﾀﾞｱｯｾﾝ | 1 | INC.1-15 |
| - | 212T0-50521 | | CYL-ASSY,LIFT VFM275 | ﾘﾌﾄｼﾘﾝﾀﾞｱｯｾﾝ | 1 | INC.1-15 |
| - | 212T0-50501 | | CYL-ASSY,LIFT VFM300 | ﾘﾌﾄｼﾘﾝﾀﾞｱｯｾﾝ | 1 | INC.1-15 |
| - | 212T0-50531 | | CYL-ASSY,LIFT VFM325 | ﾘﾌﾄｼﾘﾝﾀﾞｱｯｾﾝ | 1 | INC.1-15 |
| - | 212T0-50541 | | CYL-ASSY,LIFT VFM330 | ﾘﾌﾄｼﾘﾝﾀﾞｱｯｾﾝ | 1 | INC.1-15 |
| - | 212T0-50551 | | CYL-ASSY,LIFT VFM350 | ﾘﾌﾄｼﾘﾝﾀﾞｱｯｾﾝ | 1 | INC.1-15 |
| - | 212T0-50561 | | CYL-ASSY,LIFT VFM366 | ﾘﾌﾄｼﾘﾝﾀﾞｱｯｾﾝ | 1 | INC.1-15 |
| - | 212T0-80561 | | CYL-ASSY,LIFT VFM370 | ﾘﾌﾄｼﾘﾝﾀﾞｱｯｾﾝ | 1 | INC.1-15 |
| - | 212T0-50571 | | CYL-ASSY,LIFT VFM375 | ﾘﾌﾄｼﾘﾝﾀﾞｱｯｾﾝ | 1 | INC.1-15 |
| - | 212T0-50581 | | CYL-ASSY,LIFT VFM400 | ﾘﾌﾄｼﾘﾝﾀﾞｱｯｾﾝ | 1 | INC.1-15 |
| - | 212T0-50591 | | CYL-ASSY,LIFT VFM425 | ﾘﾌﾄｼﾘﾝﾀﾞｱｯｾﾝ | 1 | INC.1-15 |
| - | 212T0-50601 | | CYL-ASSY,LIFT VFM450 | ﾘﾌﾄｼﾘﾝﾀﾞｱｯｾﾝ | 1 | INC.1-15 |
| - | 212T0-50611 | | CYL-ASSY,LIFT VFM475 | ﾘﾌﾄｼﾘﾝﾀﾞｱｯｾﾝ | 1 | INC.1-15 |
| - | 212T0-50621 | | CYL-ASSY,LIFT VFM500 | ﾘﾌﾄｼﾘﾝﾀﾞｱｯｾﾝ | 1 | INC.1-15 |
| - | 212T0-50631 | | CYL-ASSY,LIFT VFM550 | ﾘﾌﾄｼﾘﾝﾀﾞｱｯｾﾝ | 1 | INC.1-15 |
| - | 212T0-50641 | | CYL-ASSY,LIFT VFM600 | ﾘﾌﾄｼﾘﾝﾀﾞｱｯｾﾝ | 1 | INC.1-15 |
| 901 | B-B675B-00003 | K1 | KIT,HEAD | ﾍｯﾄﾞｷｯﾄ | 1 | INC.3,4 |
| 902 | B-B675A-00006 | K2 | KIT,REPAIR | ﾘﾍﾟｱｷｯﾄ | 1 | INC.5-10,14 |
| 1 | B-B6717-94101 | | BODY,CYL VFM200 | ﾎﾞﾃﾞｨ | 1 | |
| - | B-B6717-94201 | | BODY,CYL VFM225 | ﾎﾞﾃﾞｨ | 1 | |
| - | B-B6717-94301 | | BODY,CYL VFM250 | ﾎﾞﾃﾞｨ | 1 | |
| - | B-B6717-92601 | | BODY,CYL VFM270 | ﾎﾞﾃﾞｨ | 1 | |
| - | B-B6717-92701 | | BODY,CYL VFM275 | ﾎﾞﾃﾞｨ | 1 | |
| - | B-B6717-92801 | | BODY,CYL VFM300 | ﾎﾞﾃﾞｨ | 1 | |
| - | B-B6717-92901 | | BODY,CYL VFM325 | ﾎﾞﾃﾞｨ | 1 | |
| - | B-B6717-93001 | | BODY,CYL VFM330 | ﾎﾞﾃﾞｨ | 1 | |
| - | B-B6717-93101 | | BODY,CYL VFM350 | ﾎﾞﾃﾞｨ | 1 | |
| - | B-B6717-93201 | | BODY,CYL VFM366 | ﾎﾞﾃﾞｨ | 1 | |
| - | B-B6717-88201 | | BODY,CYL VFM370 | ﾎﾞﾃﾞｨ | 1 | |
| - | B-B6717-93301 | | BODY,CYL VFM375 | ﾎﾞﾃﾞｨ | 1 | |
| - | B-B6717-93401 | | BODY,CYL VFM400 | ﾎﾞﾃﾞｨ | 1 | |
| - | B-B6717-93501 | | BODY,CYL VFM425 | ﾎﾞﾃﾞｨ | 1 | |
| - | B-B6717-93601 | | BODY,CYL VFM450 | ﾎﾞﾃﾞｨ | 1 | |
| - | B-B6717-93701 | | BODY,CYL VFM475 | ﾎﾞﾃﾞｨ | 1 | |
| - | B-B6717-93801 | | BODY,CYL VFM500 | ﾎﾞﾃﾞｨ | 1 | |
| - | B-B6717-93901 | | BODY,CYL VFM550 | ﾎﾞﾃﾞｨ | 1 | |
| - | B-B6717-94001 | | BODY,CYL VFM600 | ﾎﾞﾃﾞｨ | 1 | |
| 2 | B-B6717-94102 | | ROD VFM200 | ﾛｯﾄﾞ | 1 | |
| - | B-B6717-94202 | | ROD VFM225 | ﾛｯﾄﾞ | 1 | |
| - | B-B6717-94302 | | ROD VFM250 | ﾛｯﾄﾞ | 1 | |
| - | B-B6717-92602 | | ROD VFM270 | ﾛｯﾄﾞ | 1 | |
| - | B-B6717-92702 | | ROD VFM275 | ﾛｯﾄﾞ | 1 | |
| - | B-B6717-92802 | | ROD VFM300 | ﾛｯﾄﾞ | 1 | |
| - | B-B6717-92902 | | ROD VFM325 | ﾛｯﾄﾞ | 1 | |
| - | B-B6717-93002 | | ROD VFM330 | ﾛｯﾄﾞ | 1 | |
| - | B-B6717-93102 | | ROD VFM350 | ﾛｯﾄﾞ | 1 | |
| - | B-B6717-93202 | | ROD VFM366 | ﾛｯﾄﾞ | 1 | |

# FIG.211 LIFT CYLINDER (FRONT) [VFM2N5]

(M7020510) リフトシリンダ(フロント)

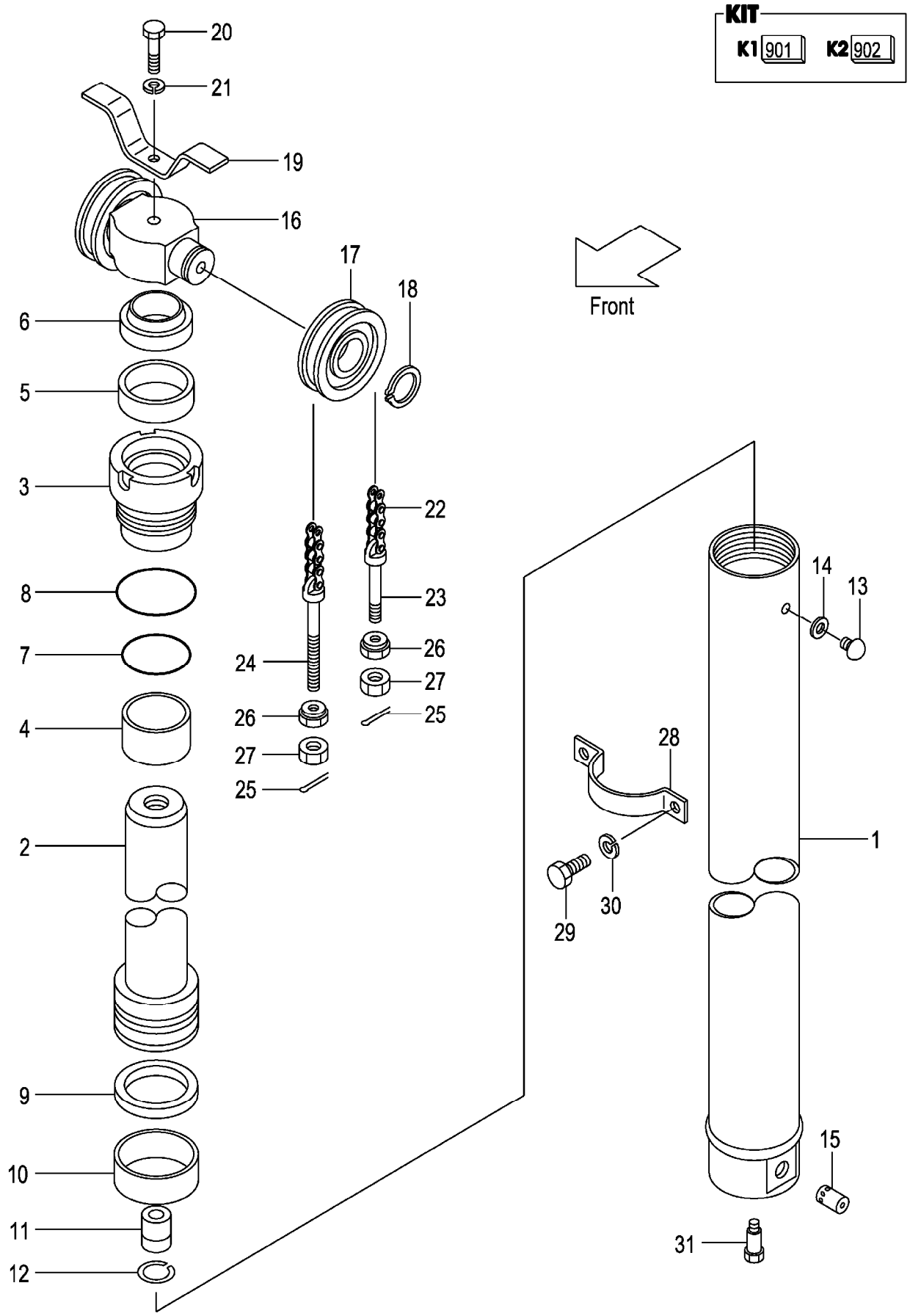

A:VFM2N5(2T)
B:VFM2N5(2.5T)

| Item No | Part No. | Mark | Description | | Req'd | Remarks : Serial No. |
|---|---|---|---|---|---|---|
| - | B-B6717-88202 | | ROD VFM370 | ﾛｯﾄﾞ | 1 | |
| - | B-B6717-93302 | | ROD VFM375 | ﾛｯﾄﾞ | 1 | |
| - | B-B6717-93402 | | ROD VFM400 | ﾛｯﾄﾞ | 1 | |
| - | B-B6717-93502 | | ROD VFM425 | ﾛｯﾄﾞ | 1 | |
| - | B-B6717-93602 | | ROD VFM450 | ﾛｯﾄﾞ | 1 | |
| - | B-B6717-93702 | | ROD VFM475 | ﾛｯﾄﾞ | 1 | |
| - | B-B6717-93802 | | ROD VFM500 | ﾛｯﾄﾞ | 1 | |
| - | B-B6717-93902 | | ROD VFM550 | ﾛｯﾄﾞ | 1 | |
| - | B-B6717-94002 | | ROD VFM600 | ﾛｯﾄﾞ | 1 | |
| 3 | B-B6121-75007 | * | HEAD | ﾍｯﾄﾞ | 1 | |
| 4 | B-30131-55009 | * | BUSHING | ﾌﾞｯｼﾝｸﾞ | 1 | |
| 5 | B-30961-55013 | * | U-RING | Uﾘﾝｸﾞ | 1 | |
| 6 | B-30191-55050 | * | RING,WIPER | ﾘﾝｸﾞ | 1 | |
| 7 | B-95123-07000 | * | O-RING | Oﾘﾝｸﾞ | 1 | |
| 8 | B-95151-07500 | * | O-RING | Oﾘﾝｸﾞ | 1 | |
| 9 | B-B6983-75007 | * | RING,SEAL | ﾘﾝｸﾞ | 1 | |
| 10 | B-B6181-75007 | * | RING,SLIDE | ﾘﾝｸﾞ | 1 | |
| 11 | B-C4300-22001 | | VALVE,CHECK | ﾊﾞﾙﾌﾞ | 1 | |
| 12 | B-94721-22101 | | RING,SNAP | ｽﾅｯﾌﾟﾘﾝｸﾞ | 1 | |
| 13 | B-B6521-90004 | | PLUG | ﾌﾟﾗｸﾞ | 1 | |
| 14 | B-B6711-00001 | * | GASKET | ｶﾞｽｹｯﾄ | 1 | |
| 15 | B-26570-30115 | | VALVE | ﾊﾞﾙﾌﾞ | 1 | |
| 16 | 212T0-82001 | | HEAD,PISTON | ﾍｯﾄﾞ | 1 | |
| 17 | 234A8-43501 | | SHEEVE | ｼｰﾌﾞ | 2 | |
| - | 22208-40031 | | SHEEVE | ｼｰﾌﾞ | 2 | [FC][FCS35][FCS45][FCS55] |
| 18 | 02100-00040 | | RING,SNAP | ｽﾅｯﾌﾟﾘﾝｸﾞ | 2 | |
| 19 | 214A0-82681 | | STOPPER,CHAIN | ｽﾄｯﾊﾟ | 1 | |
| 20 | 01100-16070 | | BOLT | ﾎﾞﾙﾄ | 1 | |
| - | 01100-16075 | | BOLT | ﾎﾞﾙﾄ | 1 | [FC][FCS35][FCS45][FCS55] |
| 21 | 02010-00016 | | WASHER | ﾜｯｼｬ | 1 | |
| 22 | 22679-45611 | | CHAIN,LEAF VFM200 | ﾁｪｰﾝ | 2 | |
| - | 22679-45671 | | CHAIN,LEAF VFM225 | ﾁｪｰﾝ | 2 | |
| - | 22679-45711 | | CHAIN,LEAF VFM250 | ﾁｪｰﾝ | 2 | |
| - | 22679-45771 | | CHAIN,LEAF VFM270 | ﾁｪｰﾝ | 2 | |
| - | 22679-45791 | | CHAIN,LEAF VFM275 | ﾁｪｰﾝ | 2 | |
| - | 22679-45811 | | CHAIN,LEAF VFM300 | ﾁｪｰﾝ | 2 | |
| - | 22679-45891 | | CHAIN,LEAF VFM325 | ﾁｪｰﾝ | 2 | |
| - | 22679-45891 | | CHAIN,LEAF VFM330 | ﾁｪｰﾝ | 2 | |
| - | 22679-45951 | | CHAIN,LEAF VFM350 | ﾁｪｰﾝ | 2 | |
| - | 22679-45991 | | CHAIN,LEAF VFM366 | ﾁｪｰﾝ | 2 | |
| - | 22679-46011 | | CHAIN,LEAF VFM370 | ﾁｪｰﾝ | 2 | |
| - | 22679-46011 | | CHAIN,LEAF VFM375 | ﾁｪｰﾝ | 2 | |
| - | 22679-46111 | | CHAIN,LEAF VFM400 | ﾁｪｰﾝ | 2 | |
| - | 22679-46171 | | CHAIN,LEAF VFM425 | ﾁｪｰﾝ | 2 | |
| - | 22679-46231 | | CHAIN,LEAF VFM450 | ﾁｪｰﾝ | 2 | |
| - | 22679-46311 | | CHAIN,LEAF VFM475 | ﾁｪｰﾝ | 2 | |
| - | 22679-46371 | | CHAIN,LEAF VFM500 | ﾁｪｰﾝ | 2 | |
| - | 22679-46531 | | CHAIN,LEAF VFM550 | ﾁｪｰﾝ | 2 | |
| - | 22679-46651 | | CHAIN,LEAF VFM600 | ﾁｪｰﾝ | 2 | |
| - | 09001-10035 | | CHAIN,ROLLER VFM200 | ﾁｪｰﾝ | 2 | [FC][FCS35][FCS45][FCS55] |

# FIG.211 LIFT CYLINDER (FRONT) [VFM2N5]

(M7020510) リフトシリンダ(フロント)

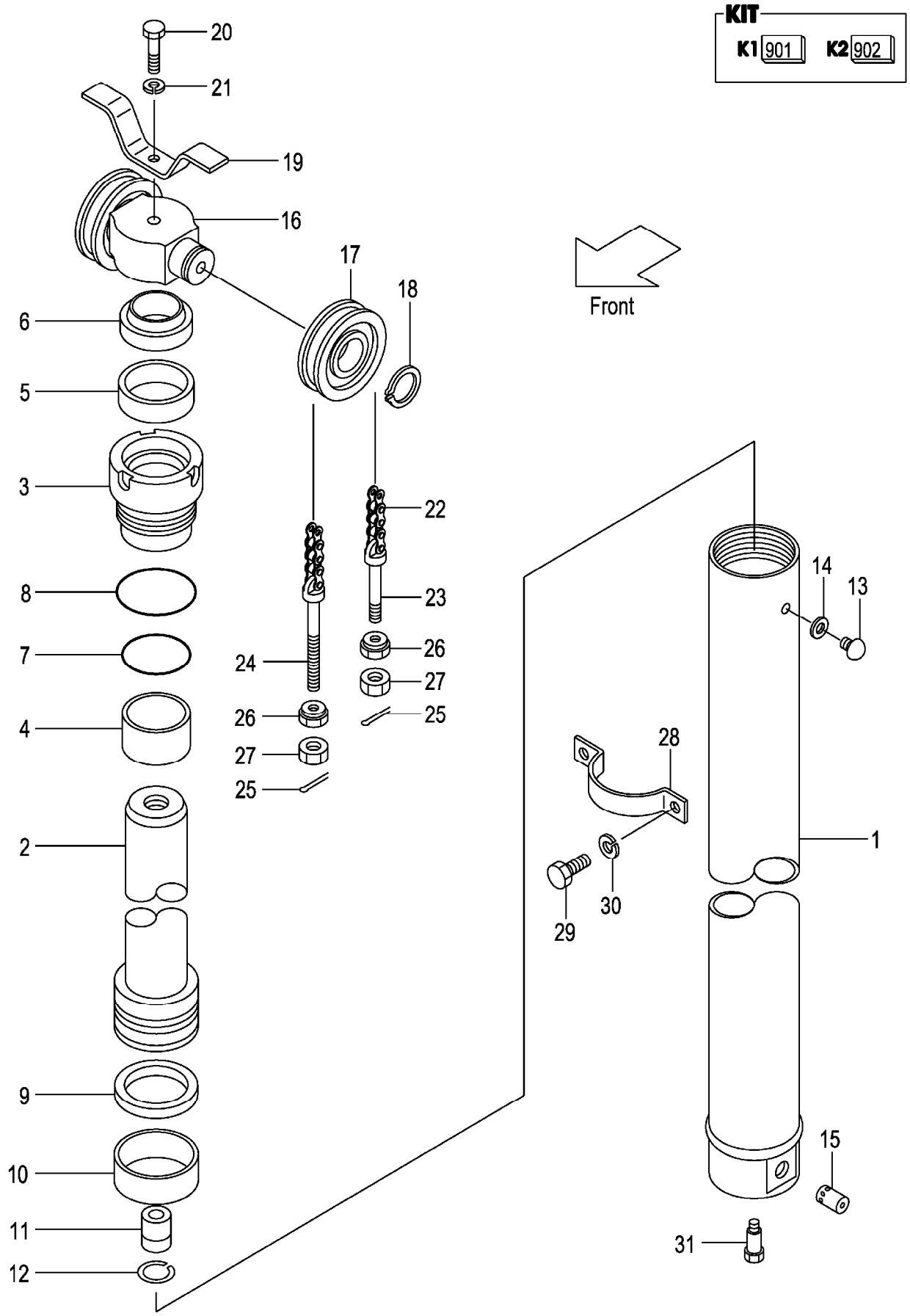

A:VFM2N5(2T)
B:VFM2N5(2.5T)

| Item No | Part No. | Mark | Description | | Req'd | Remarks : Serial No. |
|---|---|---|---|---|---|---|
| - | 09001-10039 | | CHAIN,ROLLER VFM225 | ﾁｪｰﾝ | 2 | [FC][FCS35][FCS45][FCS55] |
| - | 09001-10041 | | CHAIN,ROLLER VFM250 | ﾁｪｰﾝ | 2 | [FC][FCS35][FCS45][FCS55] |
| - | 09001-10045 | | CHAIN,ROLLER VFM270 | ﾁｪｰﾝ | 2 | [FC][FCS35][FCS45][FCS55] |
| - | 09001-10045 | | CHAIN,ROLLER VFM275 | ﾁｪｰﾝ | 2 | [FC][FCS35][FCS45][FCS55] |
| - | 09001-10047 | | CHAIN,ROLLER VFM300 | ﾁｪｰﾝ | 2 | [FC][FCS35][FCS45][FCS55] |
| - | 09001-10051 | | CHAIN,ROLLER VFM320 | ﾁｪｰﾝ | 2 | [FC][FCS35][FCS45][FCS55] |
| - | 09001-10051 | | CHAIN,ROLLER VFM330 | ﾁｪｰﾝ | 2 | [FC][FCS35][FCS45][FCS55] |
| - | 09001-10055 | | CHAIN,ROLLER VFM350 | ﾁｪｰﾝ | 2 | [FC][FCS35][FCS45][FCS55] |
| - | 09001-10057 | | CHAIN,ROLLER VFM366 | ﾁｪｰﾝ | 2 | [FC][FCS35][FCS45][FCS55] |
| - | 09001-10059 | | CHAIN,ROLLER VFM370 | ﾁｪｰﾝ | 2 | [FC][FCS35][FCS45][FCS55] |
| - | 09001-10059 | | CHAIN,ROLLER VFM375 | ﾁｪｰﾝ | 2 | [FC][FCS35][FCS45][FCS55] |
| - | 09001-10065 | | CHAIN,ROLLER VFM400 | ﾁｪｰﾝ | 2 | [FC][FCS35][FCS45][FCS55] |
| - | 09001-10069 | | CHAIN,ROLLER VFM425 | ﾁｪｰﾝ | 2 | [FC][FCS35][FCS45][FCS55] |
| - | 09001-10073 | | CHAIN,ROLLER VFM450 | ﾁｪｰﾝ | 2 | [FC][FCS35][FCS45][FCS55] |
| - | 09001-10077 | | CHAIN,ROLLER VFM475 | ﾁｪｰﾝ | 2 | [FC][FCS35][FCS45][FCS55] |
| - | 09001-10081 | | CHAIN,ROLLER VFM500 | ﾁｪｰﾝ | 2 | [FC][FCS35][FCS45][FCS55] |
| - | 09001-10089 | | CHAIN,ROLLER VFM550 | ﾁｪｰﾝ | 2 | [FC][FCS35][FCS45][FCS55] |
| - | 09001-10097 | | CHAIN,ROLLER VFM600 | ﾁｪｰﾝ | 2 | [FC][FCS35][FCS45][FCS55] |
| 23 | 23500-82001 | | PIN,ANCHOR | ﾋﾟﾝ | 2 | |
| - | 231A0-82001 | | PIN,ANCHOR | ﾋﾟﾝ | 2 | [FC][FCS35][FCS45][FCS55] |
| 24 | 52672-72231 | | PIN,ANCHOR | ﾋﾟﾝ | 2 | |
| - | 22218-42111 | | PIN,ANCHOR | ﾋﾟﾝ | 2 | [FC][FCS35][FCS45][FCS55] |
| 25 | 02200-03030 | | PIN,COTTER | ﾋﾟﾝ | 4 | |
| 26 | 22218-40191 | | NUT | ﾅｯﾄ | 4 | |
| 27 | 01402-00018 | | NUT | ﾅｯﾄ | 4 | |
| - | 01400-00018 | | NUT | ﾅｯﾄ | 4 | [FC][FCS35][FCS45][FCS55] |
| 28 | 212T0-82101 | | SUPPORT,CYLINDER | ｻﾎﾟｰﾄ | 1 | |
| 29 | 01103-10018 | | BOLT | ﾎﾞﾙﾄ | 2 | |
| 30 | 02011-00010 | | WASHER | ﾜｯｼｬ | 2 | |
| 31 | 214A0-82831 | | BOLT | ﾎﾞﾙﾄ | 1 | |

# FIG.212 LIFT CYLINDER (REAR) [VFM2N5]

(M7020520) リフトシリンダ(リヤー)

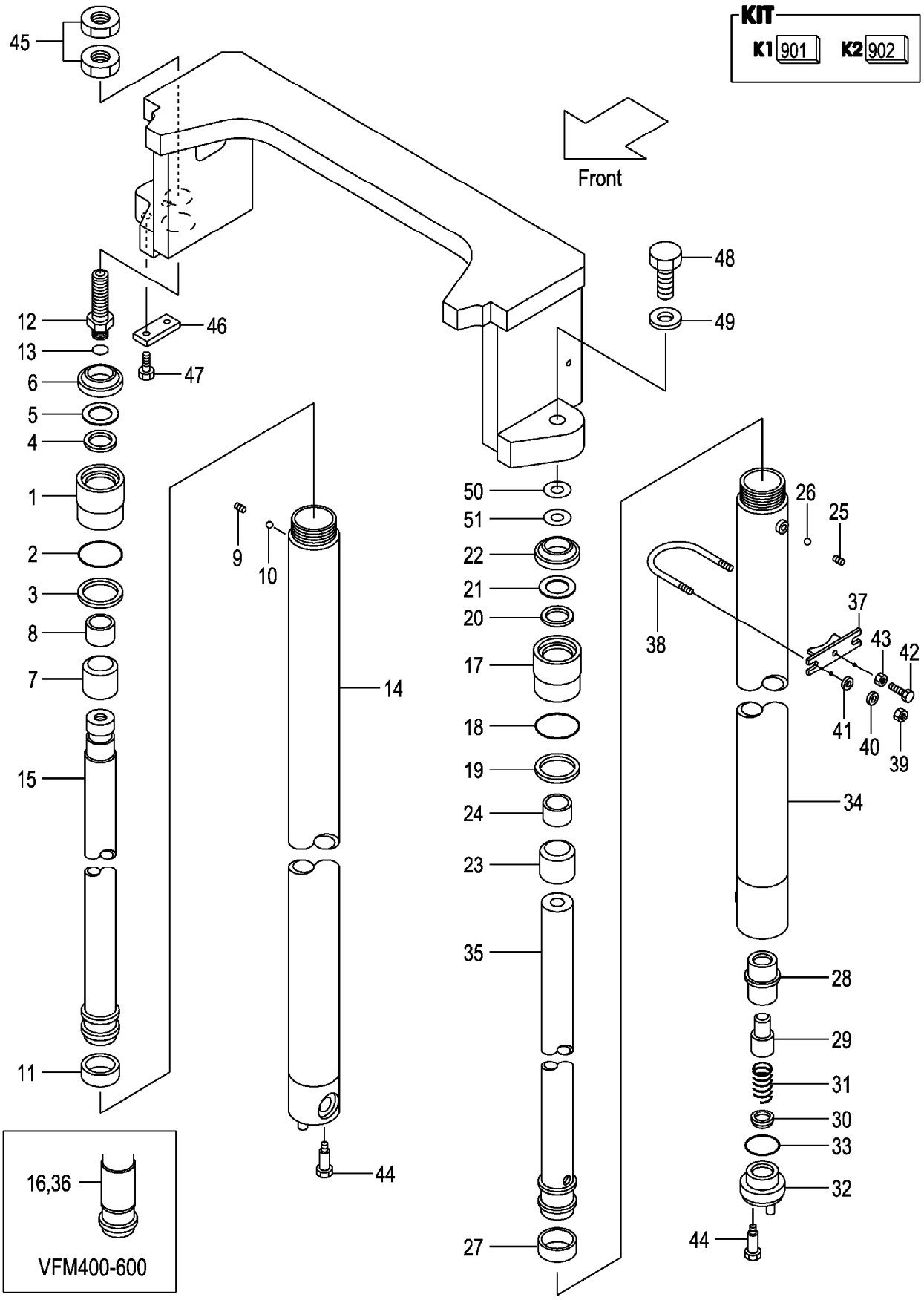

A:VFM2N5(2T)
B:VFM2N5(2.5T)

| Item No | Part No. | Mark | Description | | Req'd | Remarks : Serial No. |
|---|---|---|---|---|---|---|
| A1 | 234A0-50211 | | CYL-ASSY,LIFT,RH VFM200 | リフトシリンダアッセン | 1 | INC.1-15 |
| - | 234A0-50221 | | CYL-ASSY,LIFT,RH VFM225 | リフトシリンダアッセン | 1 | INC.1-15 |
| - | 234A0-51231 | | CYL-ASSY,LIFT,RH VFM250 | リフトシリンダアッセン | 1 | INC.1-15 |
| - | 234A0-50241 | | CYL-ASSY,LIFT,RH VFM270 | リフトシリンダアッセン | 1 | INC.1-15 |
| - | 234A0-50251 | | CYL-ASSY,LIFT,RH VFM275 | リフトシリンダアッセン | 1 | INC.1-15 |
| - | 234A0-50201 | | CYL-ASSY,LIFT,RH VFM300 | リフトシリンダアッセン | 1 | INC.1-15 |
| - | 234A0-50261 | | CYL-ASSY,LIFT,RH VFM325 | リフトシリンダアッセン | 1 | INC.1-15 |
| - | 234A0-50271 | | CYL-ASSY,LIFT,RH VFM330 | リフトシリンダアッセン | 1 | INC.1-15 |
| - | 234A0-50281 | | CYL-ASSY,LIFT,RH VFM350 | リフトシリンダアッセン | 1 | INC.1-15 |
| - | 234A0-50291 | | CYL-ASSY,LIFT,RH VFM366 | リフトシリンダアッセン | 1 | INC.1-15 |
| - | 234A0-50301 | | CYL-ASSY,LIFT,RH VFM370 | リフトシリンダアッセン | 1 | INC.1-15 |
| - | 234A0-50311 | | CYL-ASSY,LIFT,RH VFM375 | リフトシリンダアッセン | 1 | INC.1-15 |
| - | 234A0-50321 | | CYL-ASSY,LIFT,RH VFM400 | リフトシリンダアッセン | 1 | INC.1-16 |
| - | 234A0-50331 | | CYL-ASSY,LIFT,RH VFM425 | リフトシリンダアッセン | 1 | INC.1-16 |
| - | 234A0-50341 | | CYL-ASSY,LIFT,RH VFM450 | リフトシリンダアッセン | 1 | INC.1-16 |
| - | 234A0-50351 | | CYL-ASSY,LIFT,RH VFM475 | リフトシリンダアッセン | 1 | INC.1-16 |
| - | 234A0-50361 | | CYL-ASSY,LIFT,RH VFM500 | リフトシリンダアッセン | 1 | INC.1-16 |
| - | 234A0-50371 | | CYL-ASSY,LIFT,RH VFM550 | リフトシリンダアッセン | 1 | INC.1-16 |
| - | 234A0-50381 | | CYL-ASSY,LIFT,RH VFM600 | リフトシリンダアッセン | 1 | INC.1-16 |
| 901 | 214A0-59821 | K1 | KIT,OVERHAUL | オーバホールキット | 1 | INC.2-6,11 |
| 1 | 234A0-52501 | | CAP,CYL | キャップ | 1 | |
| 2 | 210F8-42631 | * | O-RING | Oリング | 1 | |
| 3 | 214A0-53681 | * | RING,BACK-UP | リング | 1 | |
| 4 | 23650-52851 | * | PACKING | パッキング | 1 | |
| 5 | 23650-52861 | * | RING,BACK-UP | リング | 1 | |
| 6 | 27410-53111 | * | SEAL,DUST | シール | 1 | |
| 7 | 234A0-52511 | | SLEEVE | スリーブ | 1 | |
| 8 | 23650-52841 | | BUSHING | ブッシング | 1 | |
| 9 | 234A0-52611 | | PLUG | プラグ | 1 | |
| 10 | 03190-00006 | | BALL | ボール | 1 | |
| 11 | 22580-53321 | | WEARING | ウェアリング | 1 | |

# FIG.212 LIFT CYLINDER (REAR) [VFM2N5]

(M7020520) リフトシリンダ(リヤー)

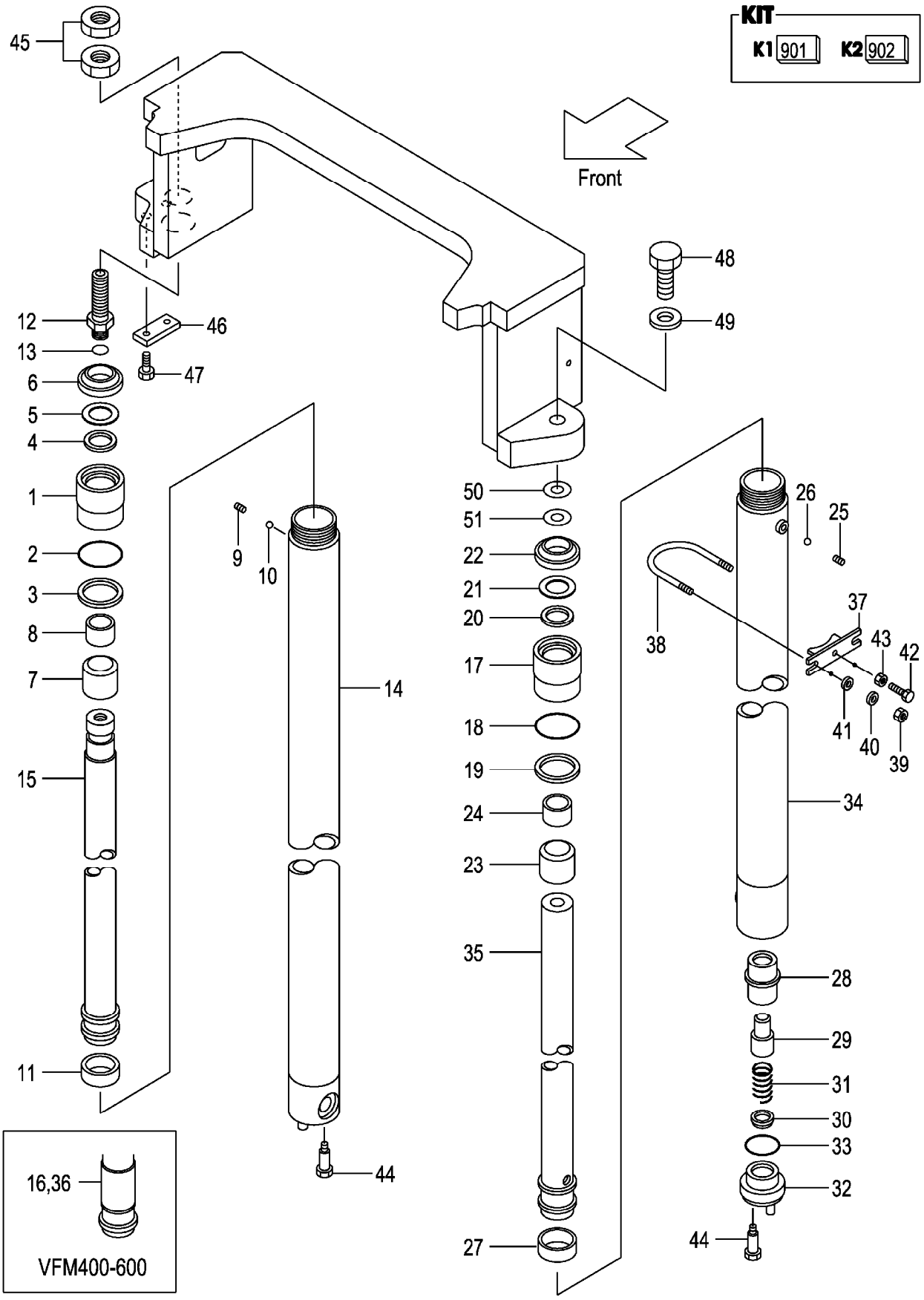

A:VFM2N5(2T)
B:VFM2N5(2.5T)

| Item No | Part No. | Mark | Description | | Req'd | Remarks : Serial No. |
|---|---|---|---|---|---|---|
| 12 | 214A0-53721 | | NIPPLE | ﾆｯﾌﾟﾙ | 1 | |
| 13 | 03320-00180 | | O-RING | Oﾘﾝｸﾞ | 1 | |
| 14 | 234A0-50711 | | BODY,CYL,RH VFM200 | ﾎﾞﾃﾞｨ | 1 | |
| - | 234A0-50721 | | BODY,CYL,RH VFM225 | ﾎﾞﾃﾞｨ | 1 | |
| - | 234A0-50731 | | BODY,CYL,RH VFM250 | ﾎﾞﾃﾞｨ | 1 | |
| - | 234A0-50741 | | BODY,CYL,RH VFM270 | ﾎﾞﾃﾞｨ | 1 | |
| - | 234A0-50751 | | BODY,CYL,RH VFM275 | ﾎﾞﾃﾞｨ | 1 | |
| - | 234A0-50701 | | BODY,CYL,RH VFM300 | ﾎﾞﾃﾞｨ | 1 | |
| - | 234A0-50761 | | BODY,CYL,RH VFM325 | ﾎﾞﾃﾞｨ | 1 | |
| - | 234A0-50771 | | BODY,CYL,RH VFM330 | ﾎﾞﾃﾞｨ | 1 | |
| - | 234A0-50781 | | BODY,CYL,RH VFM350 | ﾎﾞﾃﾞｨ | 1 | |
| - | 234A0-50791 | | BODY,CYL,RH VFM366 | ﾎﾞﾃﾞｨ | 1 | |
| - | 234A0-50801 | | BODY,CYL,RH VFM370 | ﾎﾞﾃﾞｨ | 1 | |
| - | 234A0-50811 | | BODY,CYL,RH VFM375 | ﾎﾞﾃﾞｨ | 1 | |
| - | 234A0-50821 | | BODY,CYL,RH VFM400 | ﾎﾞﾃﾞｨ | 1 | |
| - | 234A0-50831 | | BODY,CYL,RH VFM425 | ﾎﾞﾃﾞｨ | 1 | |
| - | 234A0-50841 | | BODY,CYL,RH VFM450 | ﾎﾞﾃﾞｨ | 1 | |
| - | 234A0-50851 | | BODY,CYL,RH VFM475 | ﾎﾞﾃﾞｨ | 1 | |
| - | 234A0-50861 | | BODY,CYL,RH VFM500 | ﾎﾞﾃﾞｨ | 1 | |
| - | 234A0-50871 | | BODY,CYL,RH VFM550 | ﾎﾞﾃﾞｨ | 1 | |
| - | 234A0-50881 | | BODY,CYL,RH VFM600 | ﾎﾞﾃﾞｨ | 1 | |
| 15 | 214A0-51711 | | ROD,PISTON,RH VFM200 | ﾛｯﾄﾞ | 1 | |
| - | 214A0-51721 | | ROD,PISTON,RH VFM225 | ﾛｯﾄﾞ | 1 | |
| - | 214A0-51731 | | ROD,PISTON,RH VFM250 | ﾛｯﾄﾞ | 1 | |
| - | 214A0-51741 | | ROD,PISTON,RH VFM270 | ﾛｯﾄﾞ | 1 | |
| - | 214A0-51751 | | ROD,PISTON,RH VFM275 | ﾛｯﾄﾞ | 1 | |
| - | 214A0-51701 | | ROD,PISTON,RH VFM300 | ﾛｯﾄﾞ | 1 | |
| - | 214A0-51761 | | ROD,PISTON,RH VFM325 | ﾛｯﾄﾞ | 1 | |
| - | 214A0-51771 | | ROD,PISTON,RH VFM330 | ﾛｯﾄﾞ | 1 | |
| - | 214A0-51781 | | ROD,PISTON,RH VFM350 | ﾛｯﾄﾞ | 1 | |
| - | 214A0-51791 | | ROD,PISTON,RH VFM366 | ﾛｯﾄﾞ | 1 | |
| - | 214A0-51801 | | ROD,PISTON,RH VFM370 | ﾛｯﾄﾞ | 1 | |
| - | 214A0-51811 | | ROD,PISTON,RH VFM375 | ﾛｯﾄﾞ | 1 | |
| - | 214A0-51821 | | ROD,PISTON,RH VFM400 | ﾛｯﾄﾞ | 1 | |
| - | 214A0-51831 | | ROD,PISTON,RH VFM425 | ﾛｯﾄﾞ | 1 | |
| - | 214A0-51841 | | ROD,PISTON,RH VFM450 | ﾛｯﾄﾞ | 1 | |
| - | 214A0-51851 | | ROD,PISTON,RH VFM475 | ﾛｯﾄﾞ | 1 | |
| - | 214A0-51861 | | ROD,PISTON,RH VFM500 | ﾛｯﾄﾞ | 1 | |
| - | 214A0-51871 | | ROD,PISTON,RH VFM550 | ﾛｯﾄﾞ | 1 | |
| - | 214A0-51881 | | ROD,PISTON,RH VFM600 | ﾛｯﾄﾞ | 1 | |
| 16 | 214A0-53901 | | SPACER | ｽﾍﾟｰｻ | 1 | (VFM400-500) |
| - | 214A0-53901 | | SPACER | ｽﾍﾟｰｻ | 2 | (VFM550-600) |
| A2 | 234A0-50011 | | CYL-ASSY,LIFT,LH VFM200 | ﾘﾌﾄｼﾘﾝﾀﾞｱｯｾﾝ | 1 | INC.17-35 |
| - | 234A0-50021 | | CYL-ASSY,LIFT,LH VFM225 | ﾘﾌﾄｼﾘﾝﾀﾞｱｯｾﾝ | 1 | INC.17-35 |
| - | 234A0-50031 | | CYL-ASSY,LIFT,LH VFM250 | ﾘﾌﾄｼﾘﾝﾀﾞｱｯｾﾝ | 1 | INC.17-35 |
| - | 234A0-50041 | | CYL-ASSY,LIFT,LH VFM270 | ﾘﾌﾄｼﾘﾝﾀﾞｱｯｾﾝ | 1 | INC.17-35 |

# FIG.212 LIFT CYLINDER (REAR) [VFM2N5]

(M7020520) リフトシリンダ(リヤー)

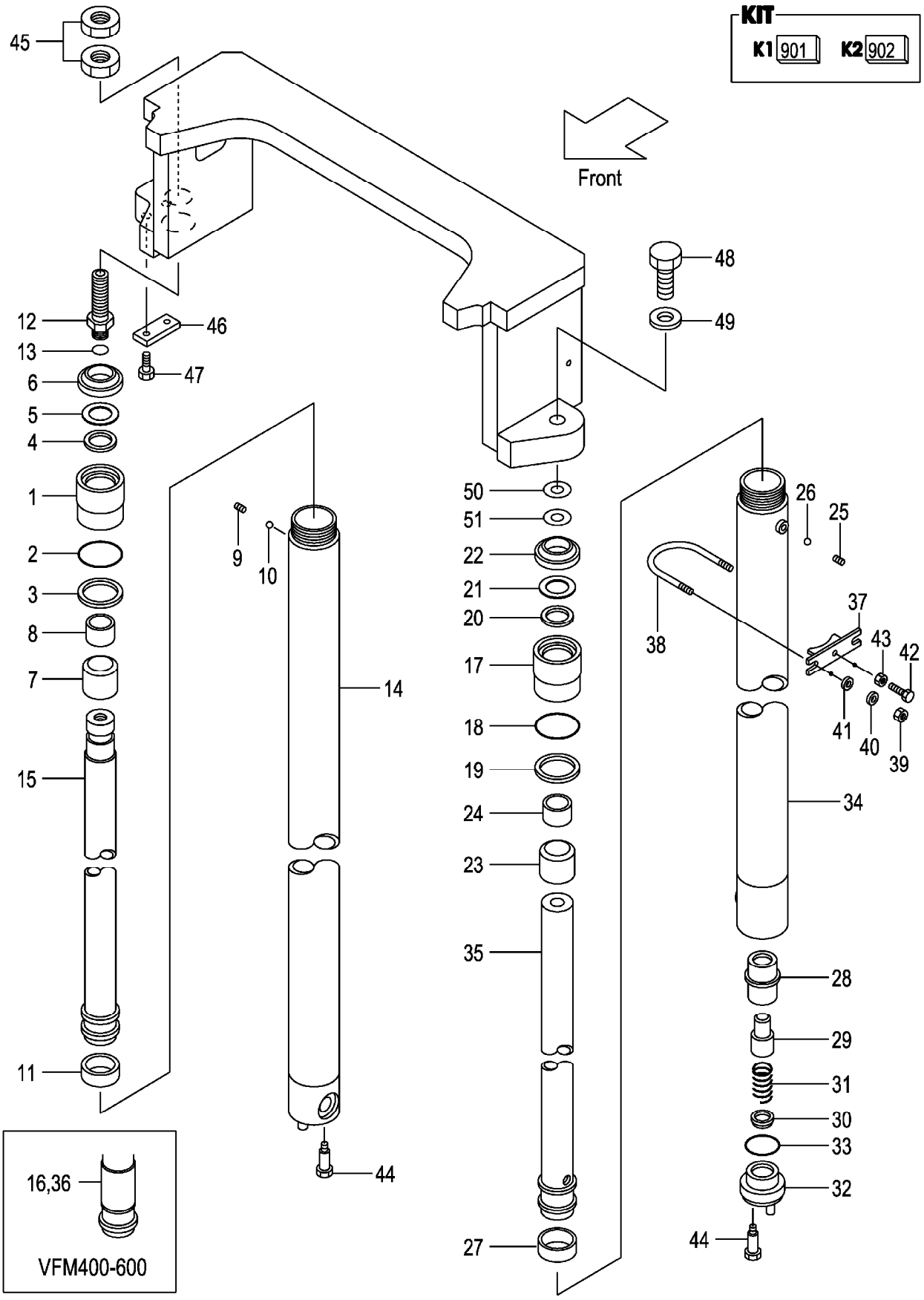

A:VFM2N5(2T)
B:VFM2N5(2.5T)

| Item No | Part No. | Mark | Description | | Req'd | Remarks : Serial No. |
|---|---|---|---|---|---|---|
| - | 234A0-50051 | | CYL-ASSY,LIFT,LH VFM275 | ﾘﾌﾄｼﾘﾝﾀﾞｱｯｾﾝ | 1 | INC.17-35 |
| - | 234A0-50001 | | CYL-ASSY,LIFT,LH VFM300 | ﾘﾌﾄｼﾘﾝﾀﾞｱｯｾﾝ | 1 | INC.17-35 |
| - | 234A0-50061 | | CYL-ASSY,LIFT,LH VFM325 | ﾘﾌﾄｼﾘﾝﾀﾞｱｯｾﾝ | 1 | INC.17-35 |
| - | 234A0-50071 | | CYL-ASSY,LIFT,LH VFM330 | ﾘﾌﾄｼﾘﾝﾀﾞｱｯｾﾝ | 1 | INC.17-35 |
| - | 234A0-50081 | | CYL-ASSY,LIFT,LH VFM350 | ﾘﾌﾄｼﾘﾝﾀﾞｱｯｾﾝ | 1 | INC.17-35 |
| - | 234A0-50091 | | CYL-ASSY,LIFT,LH VFM366 | ﾘﾌﾄｼﾘﾝﾀﾞｱｯｾﾝ | 1 | INC.17-35 |
| - | 234A0-50101 | | CYL-ASSY,LIFT,LH VFM370 | ﾘﾌﾄｼﾘﾝﾀﾞｱｯｾﾝ | 1 | INC.17-35 |
| - | 234A0-50111 | | CYL-ASSY,LIFT,LH VFM375 | ﾘﾌﾄｼﾘﾝﾀﾞｱｯｾﾝ | 1 | INC.17-35 |
| - | 234A0-50121 | | CYL-ASSY,LIFT,LH VFM400 | ﾘﾌﾄｼﾘﾝﾀﾞｱｯｾﾝ | 1 | INC.17-36 |
| - | 234A0-50131 | | CYL-ASSY,LIFT,LH VFM425 | ﾘﾌﾄｼﾘﾝﾀﾞｱｯｾﾝ | 1 | INC.17-36 |
| - | 234A0-50141 | | CYL-ASSY,LIFT,LH VFM450 | ﾘﾌﾄｼﾘﾝﾀﾞｱｯｾﾝ | 1 | INC.17-36 |
| - | 234A0-50151 | | CYL-ASSY,LIFT,LH VFM475 | ﾘﾌﾄｼﾘﾝﾀﾞｱｯｾﾝ | 1 | INC.17-36 |
| - | 234A0-50161 | | CYL-ASSY,LIFT,LH VFM500 | ﾘﾌﾄｼﾘﾝﾀﾞｱｯｾﾝ | 1 | INC.17-36 |
| - | 234A0-50171 | | CYL-ASSY,LIFT,LH VFM550 | ﾘﾌﾄｼﾘﾝﾀﾞｱｯｾﾝ | 1 | INC.17-36 |
| - | 234A0-50181 | | CYL-ASSY,LIFT,LH VFM600 | ﾘﾌﾄｼﾘﾝﾀﾞｱｯｾﾝ | 1 | INC.17-36 |
| 902 | 214A0-59821 | K2 | KIT,OVERHAUL | ｵｰﾊﾞﾎｰﾙｷｯﾄ | 1 | INC.18-22,27,33 |
| 17 | 234A0-52501 | | CAP,CYL | ｷｬｯﾌﾟ | 1 | |
| 18 | 210F8-42631 | * | O-RING | Oﾘﾝｸﾞ | 1 | |
| 19 | 214A0-53681 | * | RING,BACK-UP | ﾘﾝｸﾞ | 1 | |
| 20 | 23650-52851 | * | PACKING | ﾊﾟｯｷﾝｸﾞ | 1 | |
| 21 | 23650-52861 | * | RING,BACK-UP | ﾘﾝｸﾞ | 1 | |
| 22 | 27410-53111 | * | SEAL,DUST | ｼｰﾙ | 1 | |
| 23 | 234A0-52511 | | SLEEVE | ｽﾘｰﾌﾞ | 1 | |
| 24 | 23650-52841 | | BUSHING | ﾌﾞｯｼﾝｸﾞ | 1 | |
| 25 | 234A0-52611 | | PLUG | ﾌﾟﾗｸﾞ | 1 | |
| 26 | 03190-00006 | | BALL | ﾎﾞｰﾙ | 1 | |
| 27 | 22580-53321 | * | WEARING | ｳｪｱﾘﾝｸﾞ | 1 | |
| 28 | 53658-43021 | | SLEEVE | ｽﾘｰﾌﾞ | 1 | |
| 29 | 53658-43011 | | PISTON | ﾋﾟｽﾄﾝ | 1 | |
| 30 | 53658-43001 | | CHECK | ﾁｪｯｸ | 1 | |
| 31 | 53658-43031 | | SPRING | ｽﾌﾟﾘﾝｸﾞ | 1 | |
| 32 | 53658-43041 | | PLUG | ﾌﾟﾗｸﾞ | 1 | |
| 33 | 03320-00340 | * | O-RING | Oﾘﾝｸﾞ | 1 | |
| 34 | 234A0-50511 | | BODY,CYL,LH VFM200 | ﾎﾞﾃﾞｨ | 1 | |
| - | 234A0-50521 | | BODY,CYL,LH VFM225 | ﾎﾞﾃﾞｨ | 1 | |

# FIG.212 LIFT CYLINDER (REAR) [VFM2N5]

(M7020520) リフトシリンダ(リヤー)

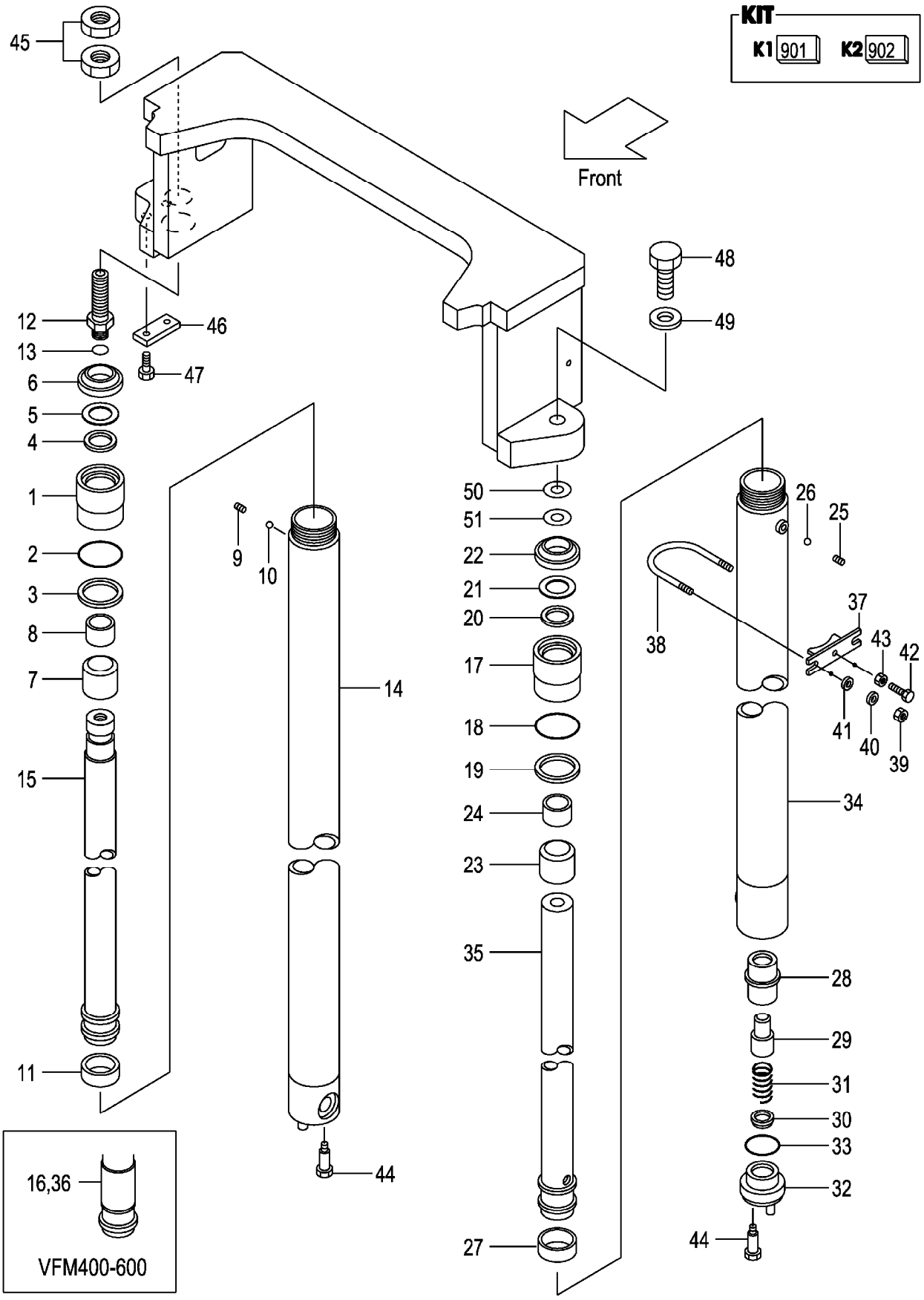

A:VFM2N5(2T)
B:VFM2N5(2.5T)

| Item No | Part No. | Mark | Description | | Req'd | Remarks : Serial No. |
|---|---|---|---|---|---|---|
| - | 234A0-50531 | | BODY,CYL,LH VFM250 | ﾎﾞﾃﾞｨ | 1 | |
| - | 234A0-50541 | | BODY,CYL,LH VFM270 | ﾎﾞﾃﾞｨ | 1 | |
| - | 234A0-50551 | | BODY,CYL,LH VFM275 | ﾎﾞﾃﾞｨ | 1 | |
| - | 234A0-50501 | | BODY,CYL,LH VFM300 | ﾎﾞﾃﾞｨ | 1 | |
| - | 234A0-50561 | | BODY,CYL,LH VFM325 | ﾎﾞﾃﾞｨ | 1 | |
| - | 234A0-50571 | | BODY,CYL,LH VFM330 | ﾎﾞﾃﾞｨ | 1 | |
| - | 234A0-50581 | | BODY,CYL,LH VFM350 | ﾎﾞﾃﾞｨ | 1 | |
| - | 234A0-50591 | | BODY,CYL,LH VFM366 | ﾎﾞﾃﾞｨ | 1 | |
| - | 234A0-50601 | | BODY,CYL,LH VFM370 | ﾎﾞﾃﾞｨ | 1 | |
| - | 234A0-50611 | | BODY,CYL,LH VFM375 | ﾎﾞﾃﾞｨ | 1 | |
| - | 234A0-50621 | | BODY,CYL,LH VFM400 | ﾎﾞﾃﾞｨ | 1 | |
| - | 234A0-50631 | | BODY,CYL,LH VFM425 | ﾎﾞﾃﾞｨ | 1 | |
| - | 234A0-50641 | | BODY,CYL,LH VFM450 | ﾎﾞﾃﾞｨ | 1 | |
| - | 234A0-50651 | | BODY,CYL,LH VFM475 | ﾎﾞﾃﾞｨ | 1 | |
| - | 234A0-50661 | | BODY,CYL,LH VFM500 | ﾎﾞﾃﾞｨ | 1 | |
| - | 234A0-50671 | | BODY,CYL,LH VFM550 | ﾎﾞﾃﾞｨ | 1 | |
| - | 234A0-50681 | | BODY,CYL,LH VFM600 | ﾎﾞﾃﾞｨ | 1 | |
| 35 | 229F0-51211 | | ROD,PISTON,LH VFM200 | ﾛｯﾄﾞ | 1 | |
| - | 229F0-51221 | | ROD,PISTON,LH VFM225 | ﾛｯﾄﾞ | 1 | |
| - | 229F0-51231 | | ROD,PISTON,LH VFM250 | ﾛｯﾄﾞ | 1 | |
| - | 229F0-51241 | | ROD,PISTON,LH VFM270 | ﾛｯﾄﾞ | 1 | |
| - | 229F0-51251 | | ROD,PISTON,LH VFM275 | ﾛｯﾄﾞ | 1 | |
| - | 229F0-51201 | | ROD,PISTON,LH VFM300 | ﾛｯﾄﾞ | 1 | |
| - | 229F0-51261 | | ROD,PISTON,LH VFM325 | ﾛｯﾄﾞ | 1 | |
| - | 229F0-51271 | | ROD,PISTON,LH VFM330 | ﾛｯﾄﾞ | 1 | |
| - | 229F0-51281 | | ROD,PISTON,LH VFM350 | ﾛｯﾄﾞ | 1 | |
| - | 229F0-51291 | | ROD,PISTON,LH VFM366 | ﾛｯﾄﾞ | 1 | |
| - | 229F0-51301 | | ROD,PISTON,LH VFM370 | ﾛｯﾄﾞ | 1 | |
| - | 229F0-51311 | | ROD,PISTON,LH VFM375 | ﾛｯﾄﾞ | 1 | |
| - | 229F0-51321 | | ROD,PISTON,LH VFM400 | ﾛｯﾄﾞ | 1 | |
| - | 229F0-51331 | | ROD,PISTON,LH VFM425 | ﾛｯﾄﾞ | 1 | |
| - | 229F0-51341 | | ROD,PISTON,LH VFM450 | ﾛｯﾄﾞ | 1 | |
| - | 229F0-51351 | | ROD,PISTON,LH VFM475 | ﾛｯﾄﾞ | 1 | |
| - | 229F0-51361 | | ROD,PISTON,LH VFM500 | ﾛｯﾄﾞ | 1 | |
| - | 229F0-51371 | | ROD,PISTON,LH VFM550 | ﾛｯﾄﾞ | 1 | |
| - | 229F0-51381 | | ROD,PISTON,LH VFM600 | ﾛｯﾄﾞ | 1 | |
| 36 | 214A0-53901 | | SPACER | ｽﾍﾟｰｻ | 1 | (VFM400-500) |
| - | 214A0-53901 | | SPACER | ｽﾍﾟｰｻ | 2 | (VFM550-600) |
| 37 | 22N58-43011 | | SUPPORT | ｻﾎﾟｰﾄ | 2 | (VFM200-375) |
| - | 22N58-43011 | | SUPPORT | ｻﾎﾟｰﾄ | 4 | (VFM400-600) |
| 38 | 234A8-42551 | | U-BOLT | Uﾎﾞﾙﾄ | 2 | (VFM200-375) |
| - | 234A8-42551 | | U-BOLT | Uﾎﾞﾙﾄ | 4 | (VFM400-600) |
| 39 | 234A8-42561 | | NUT | ﾅｯﾄ | 4 | (VFM200-375) |
| - | 234A8-42561 | | NUT | ﾅｯﾄ | 8 | (VFM400-600) |
| 40 | 02010-20010 | | WASHER | ﾜｯｼｬ | 4 | (VFM200-375) |
| - | 02010-20010 | | WASHER | ﾜｯｼｬ | 8 | (VFM400-600) |
| 41 | 02000-20010 | | WASHER | ﾜｯｼｬ | 4 | (VFM200-375) |
| - | 02000-20010 | | WASHER | ﾜｯｼｬ | 8 | (VFM400-600) |
| 42 | 232A8-42201 | | BOLT | ﾎﾞﾙﾄ | 2 | (VFM200-375) |
| - | 232A8-42201 | | BOLT | ﾎﾞﾙﾄ | 4 | (VFM400-600) |

# FIG.212 LIFT CYLINDER (REAR) [VFM2N5]

(M7020520) リフトシリンダ(リヤー)

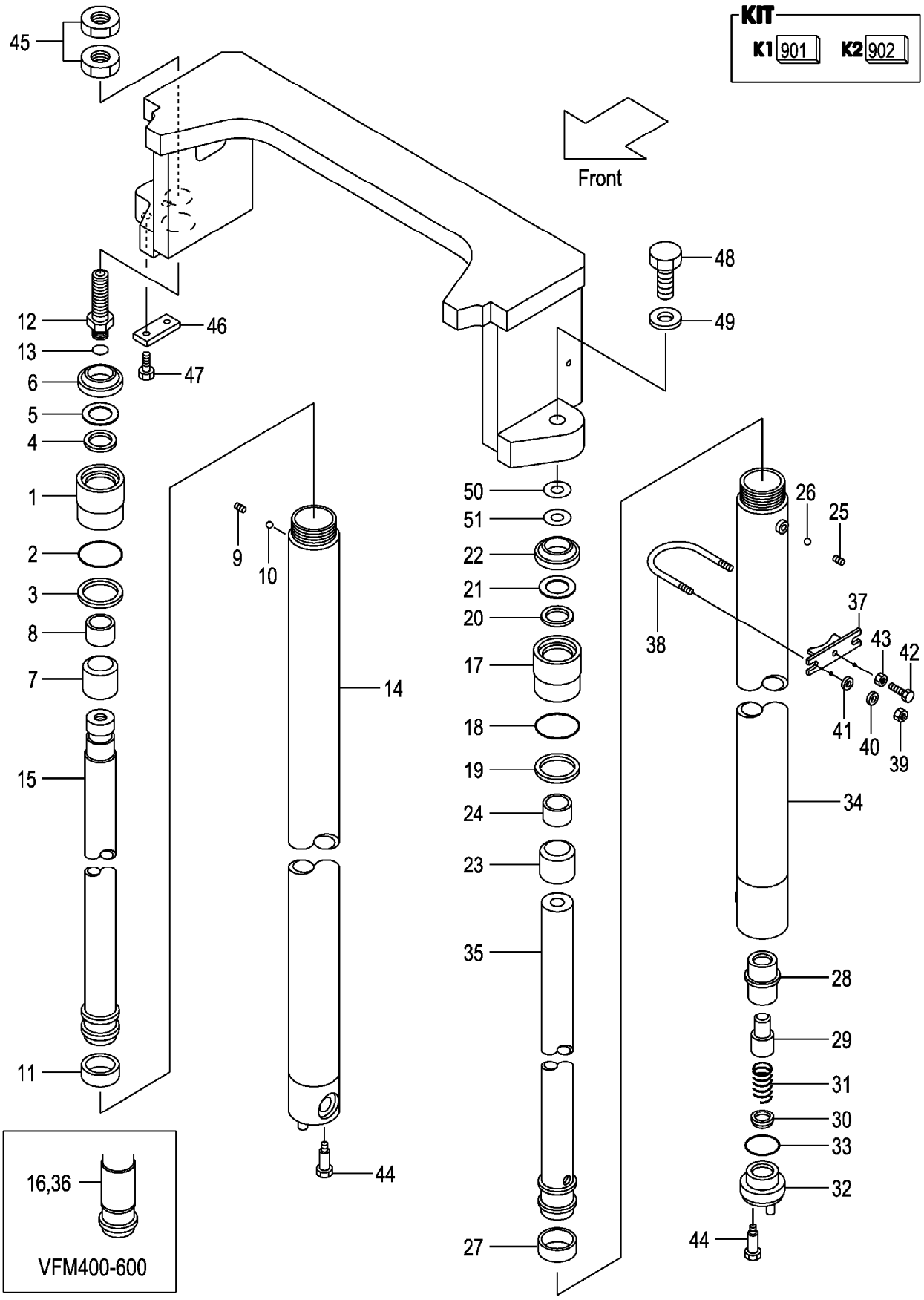

A:VFM2N5(2T)
B:VFM2N5(2.5T)

| Item No | Part No. | Mark | Description | | Req'd | Remarks : Serial No. |
|---|---|---|---|---|---|---|
| 43 | 234A8-42571 | | NUT | ﾅｯﾄ | 2 | (VFM200-375) |
| - | 234A8-42571 | | NUT | ﾅｯﾄ | 4 | (VFM400-600) |
| 44 | 214A8-42661 | | BOLT | ﾎﾞﾙﾄ | 2 | |
| 45 | 24320-52001 | | NUT | ﾅｯﾄ | 2 | |
| 46 | 282M8-32501 | | PLATE,KEY | ﾌﾟﾚｰﾄ | 1 | |
| 47 | 01184-10020 | | BOLT & WASHER | ﾎﾞﾙﾄ & ﾜｯｼｬ | 2 | |
| 48 | 01103-14040 | | BOLT | ﾎﾞﾙﾄ | 1 | |
| 49 | 02011-00014 | | WASHER | ﾜｯｼｬ | 1 | |
| 50 | 23917-42191 | | SHIM,T-1.0 | ｼﾑ | 5 | |
| 51 | 22679-43831 | | SHIM,T-0.2 | ｼﾑ | 5 | |

# FIG.213 MAST PIPING [VFM2N5]

(M7020530) マストパイピング

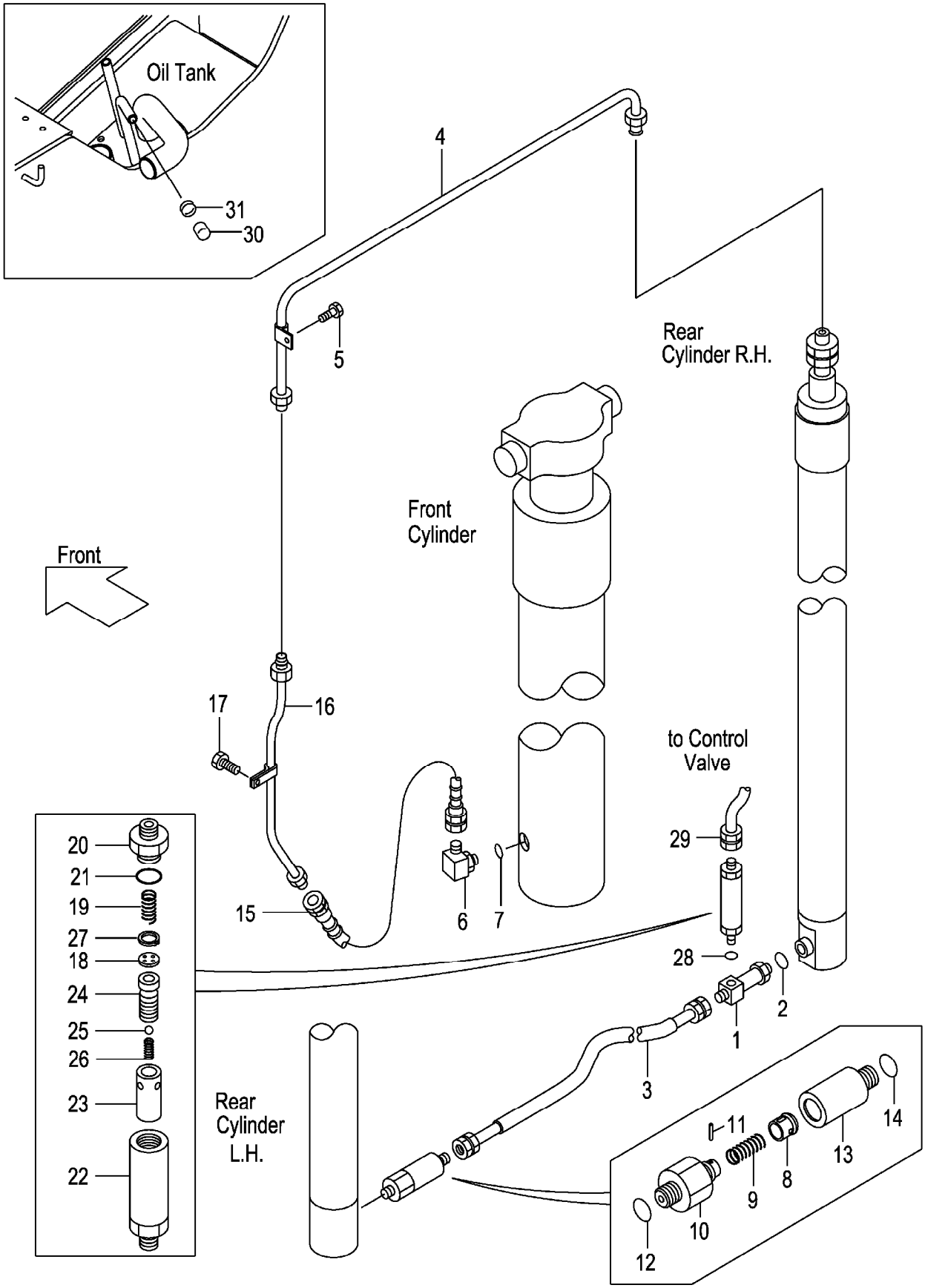

A:VFM2N5(2T)
B:VFM2N5(2.5T)

| Item No | Part No. | Mark | Description | | Req'd | Remarks : Serial No. |
|---|---|---|---|---|---|---|
| A1 | 234A8-41101 | | THREE-WAY-ASSY | ｽﾘｰｳｪｲｱｯｾﾝ | 1 | INC.1,2 |
| 1 | NO PART NO. | # | THREE-WAY | ｽﾘｰｳｪｲ | 1 | |
| 2 | 03320-00140 | | O-RING | Oﾘﾝｸﾞ | 1 | |
| 3 | 277T0-62071 | | HOSE | ﾎｰｽ | 1 | |
| 4 | 232A0-62001 | | PIPE | ﾊﾟｲﾌﾟ | 1 | |
| 5 | 01183-06016 | | BOLT | ﾎﾞﾙﾄ | 1 | |
| A2 | 04150-20404 | | ELBOW-ASSY | ｴﾙﾎﾞｱｯｾﾝ | 1 | INC.6,7 |
| 6 | NO PART NO. | # | ELBOW | ｴﾙﾎﾞ | 1 | |
| 7 | 03320-00180 | | O-RING | Oﾘﾝｸﾞ | 1 | |
| A3 | 234A0-62051 | | VALVE-ASSY,CUT | ｶｯﾄﾊﾞﾙﾌﾞｱｯｾﾝ | 1 | INC.8-14 |
| A4 | 234A8-40701 | | VALVE-SUB-ASSY | ﾊﾞﾙﾌﾞｻﾌﾞｱｯｾﾝ | 1 | INC.8-12 |
| 8 | 234A8-42602 | | PISTON | ﾋﾟｽﾄﾝ | 1 | |
| 9 | 234A8-42611 | | SPRING | ｽﾌﾟﾘﾝｸﾞ | 1 | |
| 10 | 234A8-42622 | | NIPPLE | ﾆｯﾌﾟﾙ | 1 | |
| 11 | 02270-01014 | | PIN | ﾋﾟﾝ | 1 | |
| 12 | 03320-00140 | | O-RING | Oﾘﾝｸﾞ | 1 | |
| 13 | 234A0-62111 | | ADAPTER | ｱﾀﾞﾌﾟﾀ | 1 | |
| 14 | 03320-00140 | | O-RING | Oﾘﾝｸﾞ | 1 | |
| 15 | 214A0-62151 | | HOSE | ﾎｰｽ | 1 | |
| 16 | 277P0-60301 | | PIPE VFM200 | ﾊﾟｲﾌﾟ | 1 | |
| - | 277P0-60311 | | PIPE VFM225 | ﾊﾟｲﾌﾟ | 1 | |
| - | 277P0-60321 | | PIPE VFM250 | ﾊﾟｲﾌﾟ | 1 | |
| - | 277P0-60331 | | PIPE VFM270 | ﾊﾟｲﾌﾟ | 1 | |
| - | 277P0-60341 | | PIPE VFM275 | ﾊﾟｲﾌﾟ | 1 | |
| - | 277P0-60351 | | PIPE VFM300 | ﾊﾟｲﾌﾟ | 1 | |
| - | 277P0-60361 | | PIPE VFM325 | ﾊﾟｲﾌﾟ | 1 | |
| - | 277P0-60371 | | PIPE VFM330 | ﾊﾟｲﾌﾟ | 1 | |
| - | 277P0-60381 | | PIPE VFM350 | ﾊﾟｲﾌﾟ | 1 | |
| - | 277P0-60391 | | PIPE VFM366 | ﾊﾟｲﾌﾟ | 1 | |
| - | 277P0-60401 | | PIPE VFM370 | ﾊﾟｲﾌﾟ | 1 | |
| - | 277P0-60411 | | PIPE VFM375 | ﾊﾟｲﾌﾟ | 1 | |
| - | 277P0-60421 | | PIPE VFM400 | ﾊﾟｲﾌﾟ | 1 | |
| - | 277P0-60431 | | PIPE VFM425 | ﾊﾟｲﾌﾟ | 1 | |
| - | 277P0-60441 | | PIPE VFM450 | ﾊﾟｲﾌﾟ | 1 | |
| - | 277P0-60451 | | PIPE VFM475 | ﾊﾟｲﾌﾟ | 1 | |
| - | 277P0-60461 | | PIPE VFM500 | ﾊﾟｲﾌﾟ | 1 | |
| - | 277P0-60471 | | PIPE VFM550 | ﾊﾟｲﾌﾟ | 1 | |
| - | 277P0-60481 | | PIPE VFM600 | ﾊﾟｲﾌﾟ | 1 | |
| 17 | 01183-06016 | | BOLT | ﾎﾞﾙﾄ | 1 | |
| A5 | 234A8-41001 | | REGULATOR-ASSY,FLOW | ﾌﾛｰﾚｷﾞｭﾚｰﾀｱｯｾﾝ | 1 | INC.18-27 |
| 18 | NO PART NO. | # | PLATE | ﾌﾟﾚｰﾄ | 1 | |
| 19 | 27979-43101 | | SPRING | ｽﾌﾟﾘﾝｸﾞ | 1 | |
| 20 | NO PART NO. | # | NIPPLE | ﾆｯﾌﾟﾙ | 1 | |
| 21 | 03300-00280 | | O-RING | Oﾘﾝｸﾞ | 1 | |
| 22 | NO PART NO. | # | CASE | ｹｰｽ | 1 | |
| 23 | NO PART NO. | # | SLEEVE | ｽﾘｰﾌﾞ | 1 | |
| 24 | NO PART NO. | # | PISTON | ﾋﾟｽﾄﾝ | 1 | |
| 25 | 24459-42951 | | BALL,NYLON | ﾎﾞｰﾙ | 1 | |
| 26 | 214A8-44151 | | SPRING | ｽﾌﾟﾘﾝｸﾞ | 1 | |
| 27 | 02110-00018 | | RING,SNAP | ｽﾅｯﾌﾟﾘﾝｸﾞ | 1 | |

# FIG.213 MAST PIPING [VFM2N5]

(M7020530) マストパイピング

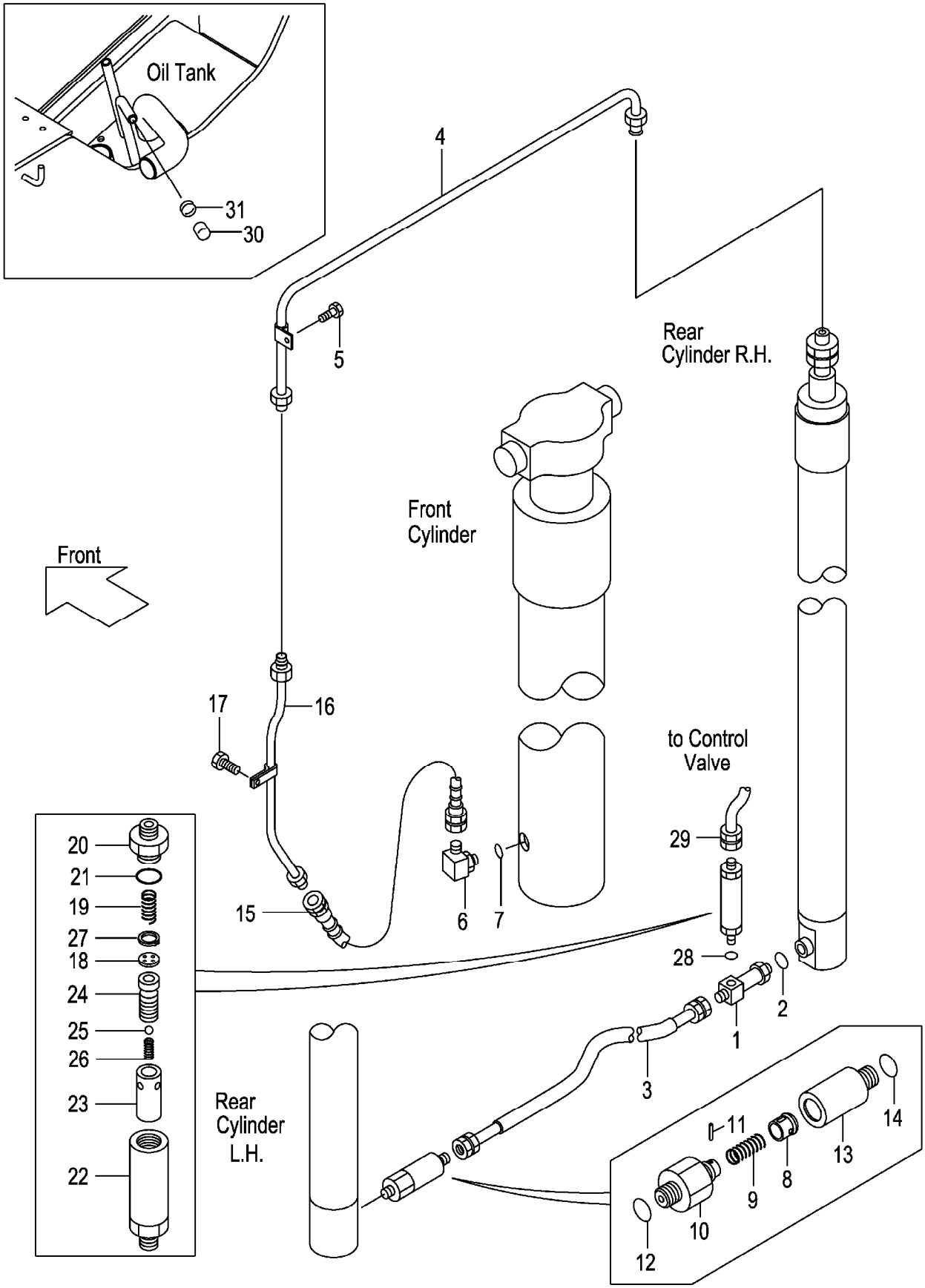

A:VFM2N5(2T)
B:VFM2N5(2.5T)

| Item No | Part No. | Mark | Description | | Req'd | Remarks : Serial No. |
|---|---|---|---|---|---|---|
| 28 | 03320-00180 | | O-RING | Oﾘﾝｸﾞ | 1 | |
| 29 | 234A8-02101 | | HOSE | ﾎｰｽ | 1 | |
| 30 | 55593-62551 | | CAP | ｷｬｯﾌﾟ | 1 | |
| 31 | 04914-00019 | | CLIP | ｸﾘｯﾌﾟ | 1 | |

# M E M O

# M E M O

# FIG.214 FORK [VFHM2N5]

(M7028160) フォーク

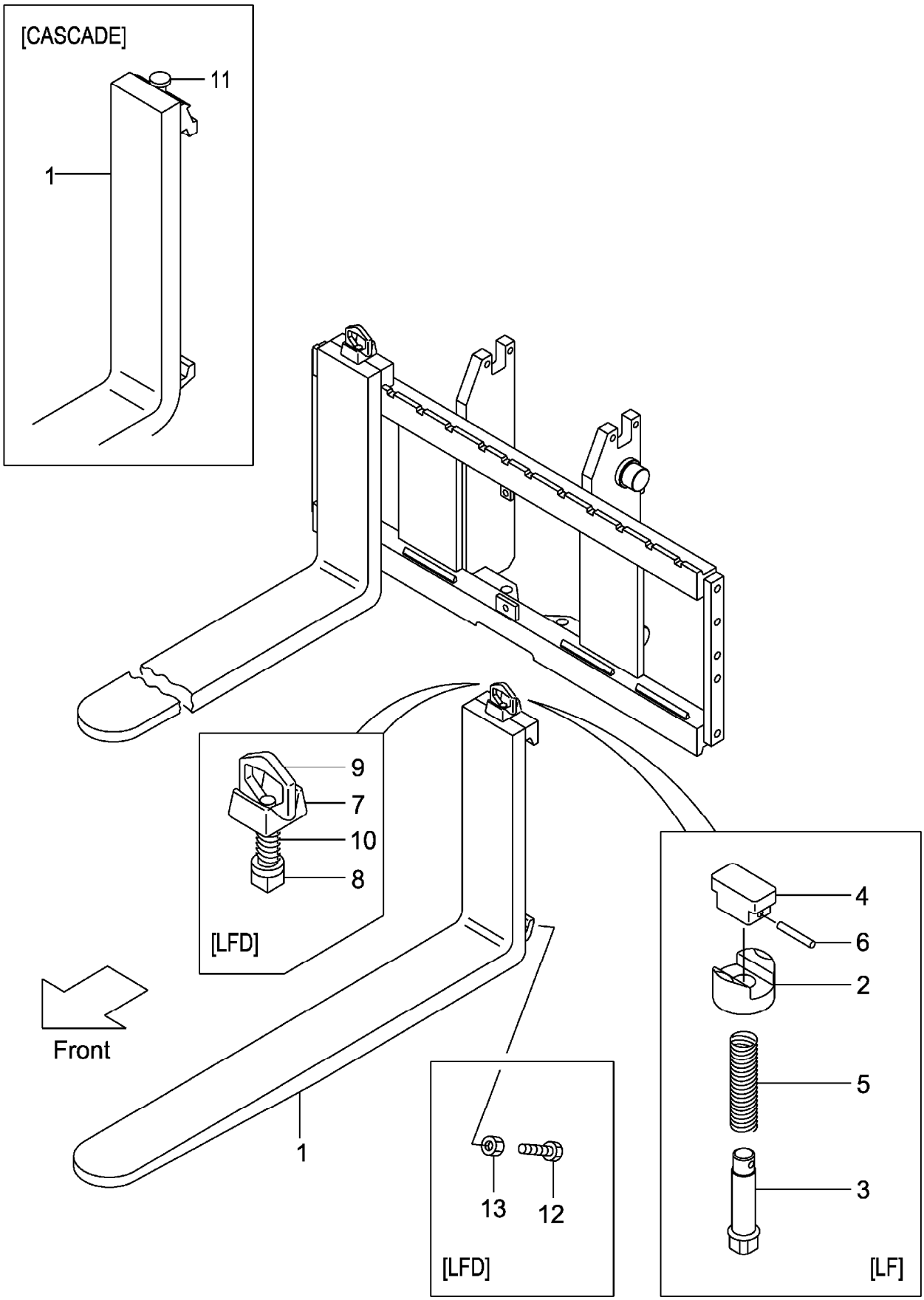

A:VFHM2N5(2T)
B:VFHM2N5(2.5T)

| Item No | Part No. | Mark | Description | Req'd | Remarks : Serial No. |
|---|---|---|---|---|---|
| 1 | 231A8-10101 | | FORK フォーク | 2 | A<br>(L=920) INC.2-6 |
| - | 214A8-10512 | | FORK フォーク | 2 | B<br>(L=1070) INC.2-6 |
| - | 231A8-10171 | | FORK フォーク | 2 | A<br>[LF090] INC.2-6 |
| - | 231F8-10571 | | FORK フォーク | 2 | B<br>[LF090] INC.2-6 |
| - | 231A8-10101 | | FORK フォーク | 2 | A<br>[LF092] INC.2-6 |
| - | 231F8-10501 | | FORK フォーク | 2 | B<br>[LF092] INC.2-6 |
| - | 214A8-10582 | | FORK フォーク | 2 | [LF100] INC.2-6 |
| - | 214A8-10512 | | FORK フォーク | 2 | [EX][LF107] INC.2-6 |
| - | 214A8-10592 | | FORK フォーク | 2 | [LF110] INC.2-6 |
| - | 214A8-10602 | | FORK フォーク | 2 | [LF120] INC.2-6 |
| - | 214A8-10522 | | FORK フォーク | 2 | [LF122] INC.2-6 |
| - | 214A8-10612 | | FORK フォーク | 2 | [LF130] INC.2-6 |
| - | 214A8-10532 | | FORK フォーク | 2 | [LF137] INC.2-6 |
| - | 214A8-10622 | | FORK フォーク | 2 | [LF140] INC.2-6 |
| - | 214A8-10632 | | FORK フォーク | 2 | [LF150] INC.2-6 |
| - | 214A8-10542 | | FORK フォーク | 2 | [LF152] INC.2-6 |
| - | 214A8-10642 | | FORK フォーク | 2 | [LF160] INC.2-6 |
| - | 214A8-10552 | | FORK フォーク | 2 | [LF167] INC.2-6 |
| - | 214A8-10653 | | FORK フォーク | 2 | [LF170] INC.2-6 |
| - | 214A8-10663 | | FORK フォーク | 2 | [LF180] INC.2-6 |
| - | 214A8-10563 | | FORK フォーク | 2 | [LF182] INC.2-6 |
| - | 214A8-10673 | | FORK フォーク | 2 | [LF190] INC.2-6 |
| - | 214A8-10683 | | FORK フォーク | 2 | [LF200] INC.2-6 |
| - | 234A8-10571 | | FORK フォーク | 2 | [LFD090] INC.7-10 |
| - | 234A8-10501 | | FORK フォーク | 2 | [LFD092] INC.7-10 |
| - | 234A8-10581 | | FORK フォーク | 2 | [LFD100] INC.7-10 |
| - | 234A8-10511 | | FORK フォーク | 2 | [LFD107] INC.7-10 |
| - | 234A8-10591 | | FORK フォーク | 2 | [LFD110] INC.7-10 |
| - | 234A8-10601 | | FORK フォーク | 2 | [LFD120] INC.7-10 |
| - | 234A8-10521 | | FORK フォーク | 2 | [LFD122] INC.7-10 |
| - | 234A8-10611 | | FORK フォーク | 2 | [LFD130] INC.7-10 |
| - | 234A8-10531 | | FORK フォーク | 2 | [LFD137] INC.7-10 |
| - | 234A8-10621 | | FORK フォーク | 2 | [LFD140] INC.7-10 |
| - | 234A8-10631 | | FORK フォーク | 2 | [LFD150] INC.7-10 |
| - | 234A8-10541 | | FORK フォーク | 2 | [LFD152] INC.7-10 |
| - | 234A8-10641 | | FORK フォーク | 2 | [LFD160] INC.7-10 |
| - | 234A8-10551 | | FORK フォーク | 2 | [LFD167] INC.7-10 |
| - | 234A8-10652 | | FORK フォーク | 2 | [LFD170] INC.7-10 |
| - | 234A8-10662 | | FORK フォーク | 2 | [LFD180] INC.7-10 |
| - | 234A8-10562 | | FORK フォーク | 2 | [LFD182] INC.7-10 |
| - | 234A8-10672 | | FORK フォーク | 2 | [LFD190] INC.7-10 |
| - | 234A8-10682 | | FORK フォーク | 2 | [LFD200] INC.7-10 |
| - | 22N58-10501 | | FORK フォーク | 2 | [LF092/CASCADE] INC.11 |
| - | 22N58-10511 | | FORK フォーク | 2 | [LF107/CASCADE] INC.11 |

# FIG.214 FORK [VFHM2N5]

(M7028160) フォーク

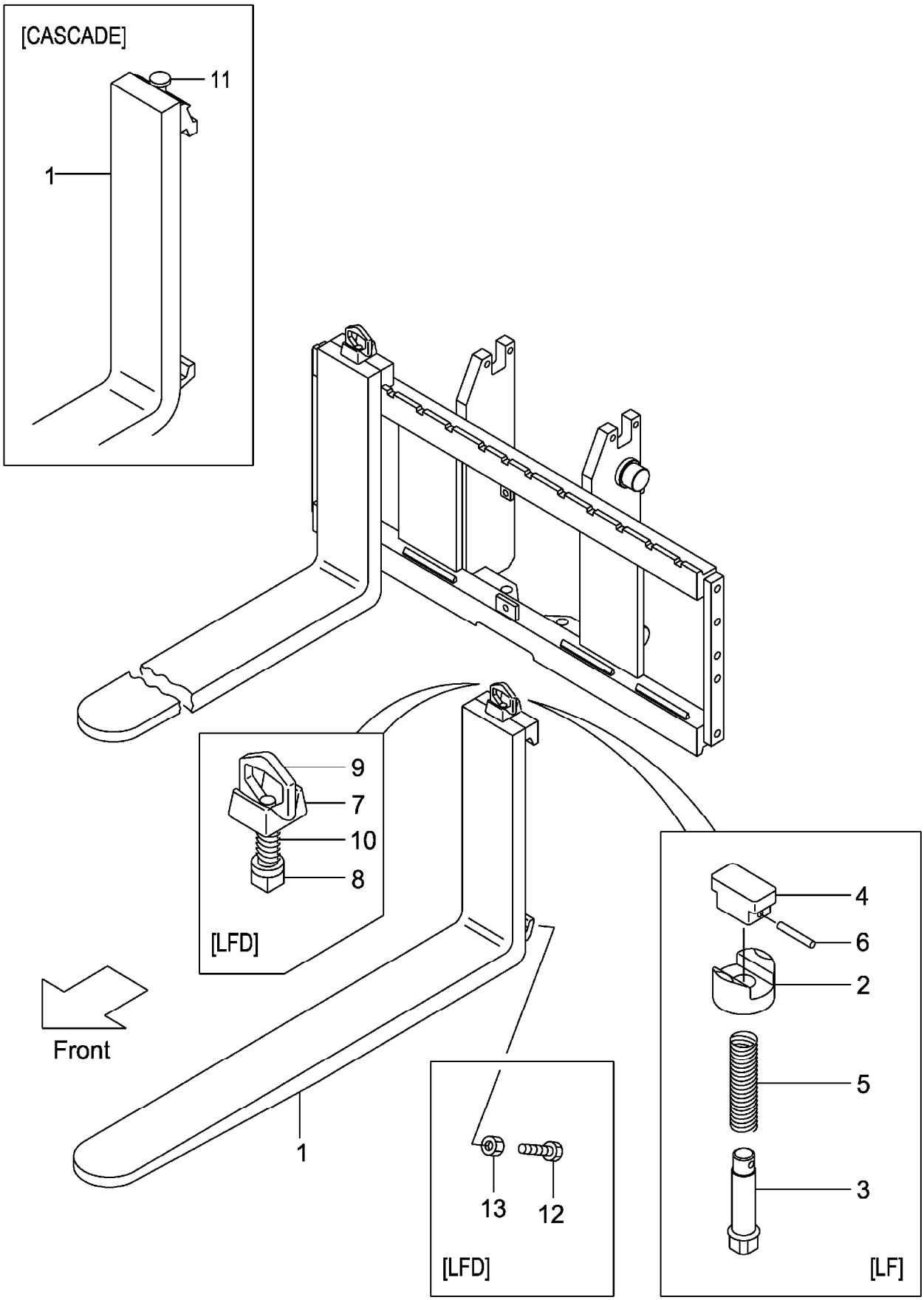

A:VFHM2N5(2T)
B:VFHM2N5(2.5T)

| Item No | Part No. | Mark | Description | | Req'd | Remarks : Serial No. |
|---|---|---|---|---|---|---|
| - | 22N58-10521 | | FORK | ﾌｫｰｸ | 2 | [LF122/CASCADE] INC.11 |
| 2 | 216G8-12921 | | HOLDER | ﾎﾙﾀﾞ | 2 | [LF] |
| 3 | 231A8-12001 | | PIN | ﾋﾟﾝ | 2 | [LF] |
| 4 | 231A8-12011 | | KNOB | ﾉﾌﾞ | 2 | [LF] |
| 5 | 231A8-12021 | | SPRING | ｽﾌﾟﾘﾝｸﾞ | 2 | [LF] |
| 6 | 231A8-12031 | | PIN,SPRING | ﾋﾟﾝ | 2 | [LF] |
| A1 | 214A8-11001 | | STOPPER-ASSY,FORK | ﾌｫｰｸｽﾄｯﾊﾟｱｯｾﾝ | 2 | [LFD] INC.7-10 |
| 7 | 214A8-12001 | | HEAD | ﾍｯﾄﾞ | 2 | [LFD] |
| 8 | 214A8-12011 | | STOPPER | ｽﾄｯﾊﾟ | 2 | [LFD] |
| 9 | 214A8-12021 | | HANDLE | ﾊﾝﾄﾞﾙ | 2 | [LFD] |
| 10 | 214A8-12031 | | SPRING | ｽﾌﾟﾘﾝｸﾞ | 2 | [LFD] |
| 11 | W-K2PK-M | | KIT,PIN,STOPPER | ｽｯﾄﾊﾟﾋﾟﾝｷｯﾄ | 2 | [CASCADE] |
| 12 | 216G8-12101 | | BOLT | ﾎﾞﾙﾄ | 4 | [LFD] |
| 13 | 01402-00010 | | NUT | ﾅｯﾄ | 4 | [LFD] |

# M E M O

# M E M O

## FIG.215 LIFT BRACKET [VFHM2N5]

(M7020910) ﾘﾌﾄﾌﾞﾗｹｯﾄ

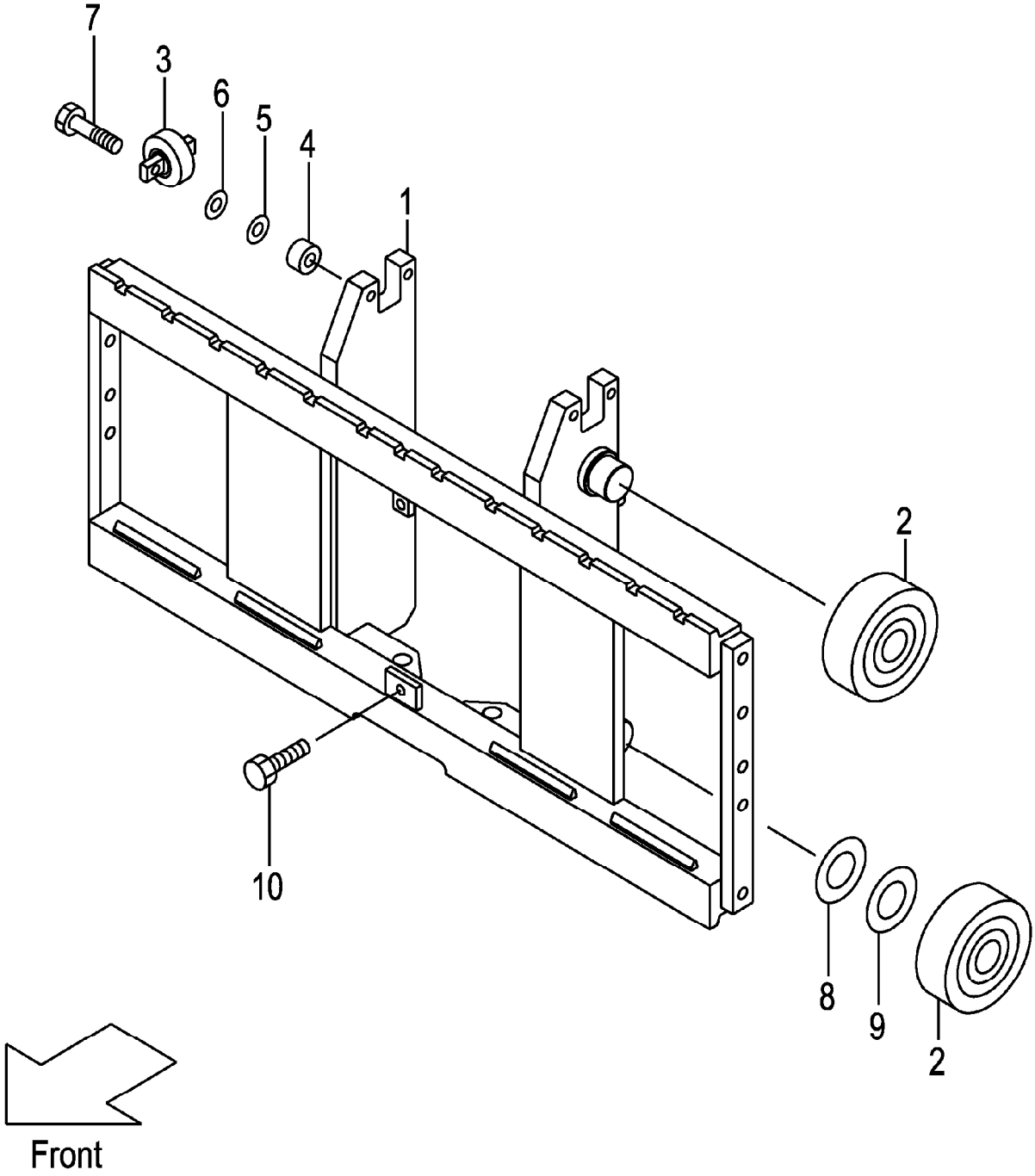

A:VFHM2N5(2T)
B:VFHM2N5(2.5T)

| Item No | Part No. | Mark | Description | | Req'd | Remarks : Serial No. |
|---|---|---|---|---|---|---|
| 1 | 22N50-90101 | | BRACKET,LIFT | ﾌﾞﾗｹｯﾄ | 1 | |
| - | 52N51-61301 | | BRACKET,LIFT | ﾌﾞﾗｹｯﾄ | 1 | [WFY110][WFY114][WFY127] [WFY135][WFY138] |
| - | 52N51-61311 | | BRACKET,LIFT(L) | ﾌﾞﾗｹｯﾄ | 1 | [WFY135][WFY138][WFY145] [WFY146][WFY154][WFY180] |
| 2 | 277P8-22051 | | ROLLER,END,119.0 | ﾛｰﾗ | 4 | |
| - | 577P3-74001 | | ROLLER,END,119.0 | ﾛｰﾗ | 4 | [FC][CS35][FCS35][FCS45] [FCS55] |
| - | 277P8-22061 | | ROLLER,END,119.5 | ﾛｰﾗ | (4) | |
| - | 577P3-74011 | | ROLLER,END,119.5 | ﾛｰﾗ | (4) | [FC][CS35][FCS35][FCS45] [FCS55] |
| 3 | 22N58-32701 | | ROLLER,SIDE | ﾛｰﾗ | 2 | |
| - | 52N53-74001 | | ROLLER,SIDE | ﾛｰﾗ | 2 | [FC][CS35][FCS35][FCS45] [FCS55] |
| 4 | 22N58-32711 | | SPACER | ｽﾍﾟｰｻ | 4 | |
| 5 | 22018-30261 | | SHIM | ｼﾑ | 4 | |
| 6 | 22018-30121 | | SHIM | ｼﾑ | 4 | |
| 7 | 01103-10045 | | BOLT | ﾎﾞﾙﾄ | 4 | |
| 8 | 277P8-22071 | | SHIM,T-0.5 | ｼﾑ | 5 | |
| 9 | 277P8-22081 | | SHIM,T-1.0 | ｼﾑ | 5 | |
| 10 | 01184-12025 | | BOLT & WASHER | ﾎﾞﾙﾄ & ﾜｯｼｬ | 1 | |
| 11 | 214A0-93001 | + | CHART,CAPACITY | ﾁｬｰﾄ | 1 | A [VFHM360-500] |
| - | 214A0-93011 | + | CHART,CAPACITY | ﾁｬｰﾄ | 1 | A [VFHM540-750] |
| - | 214A0-93201 | + | CHART,CAPACITY | ﾁｬｰﾄ | 1 | B [VFHM360-500] |
| - | 214A0-93211 | + | CHART,CAPACITY | ﾁｬｰﾄ | 1 | B [VFHM540-750] |
| - | 214A0-93031 | + | CHART,CAPACITY | ﾁｬｰﾄ | 1 | A [VFHM360-500/EXA] |
| - | 214A0-93041 | + | CHART,CAPACITY | ﾁｬｰﾄ | 1 | A [VFHM540-750/EXA] |
| - | 214A0-93231 | + | CHART,CAPACITY | ﾁｬｰﾄ | 1 | B [VFHM360-500/EXA] |
| - | 214A0-93241 | + | CHART,CAPACITY | ﾁｬｰﾄ | 1 | B [VFHM540-750/EXA] |
| - | 514A3-82301 | + | CHART,CAPACITY | ﾁｬｰﾄ | 1 | [EXB][EXC][EXE][EXN] |
| - | 514A3-82321 | + | CHART,CAPACITY | ﾁｬｰﾄ | 1 | [EXD] |
| - | 524T3-84031 | + | CHART,CAPACITY | ﾁｬｰﾄ | 1 | [EXR] |
| - | 63110-18921 | + | CHART,CAPACITY | ﾁｬｰﾄ | 1 | [EXB/CNP] |
| - | 514A3-82341 | + | CHART,CAPACITY | ﾁｬｰﾄ | 1 | [EXB/FNP][EXE/FNP][EXEEC/FNP] |
| - | 514A3-82331 | + | CHART,CAPACITY | ﾁｬｰﾄ | 1 | [EXB/SNP][EXE/SNP][EXEEC/SNP] |
| - | 514A3-82361 | + | CHART,CAPACITY | ﾁｬｰﾄ | 1 | [EXEEC/DNP][EXNEC/DNP] |
| - | 514A3-82381 | + | CHART,CAPACITY | ﾁｬｰﾄ | 1 | [EXEEC/GNP] |
| - | 514A3-82371 | + | CHART,CAPACITY | ﾁｬｰﾄ | 1 | [EXEEC/INP] |
| - | 514A3-82351 | + | CHART,CAPACITY | ﾁｬｰﾄ | 1 | [EXEEC/ONP] |
| - | 514A3-82391 | + | CHART,CAPACITY | ﾁｬｰﾄ | 1 | [EXEEC/PNP] |
| - | 529F3-82101 | + | CHART,CAPACITY | ﾁｬｰﾄ | 1 | [EXNEC/FINP] |
| - | 529F3-82111 | + | CHART,CAPACITY | ﾁｬｰﾄ | 1 | [EXNEC/SENP] |

## FIG.215 LIFT BRACKET [VFHM2N5]

(M7020910) ﾘﾌﾄﾌﾞﾗｹｯﾄ

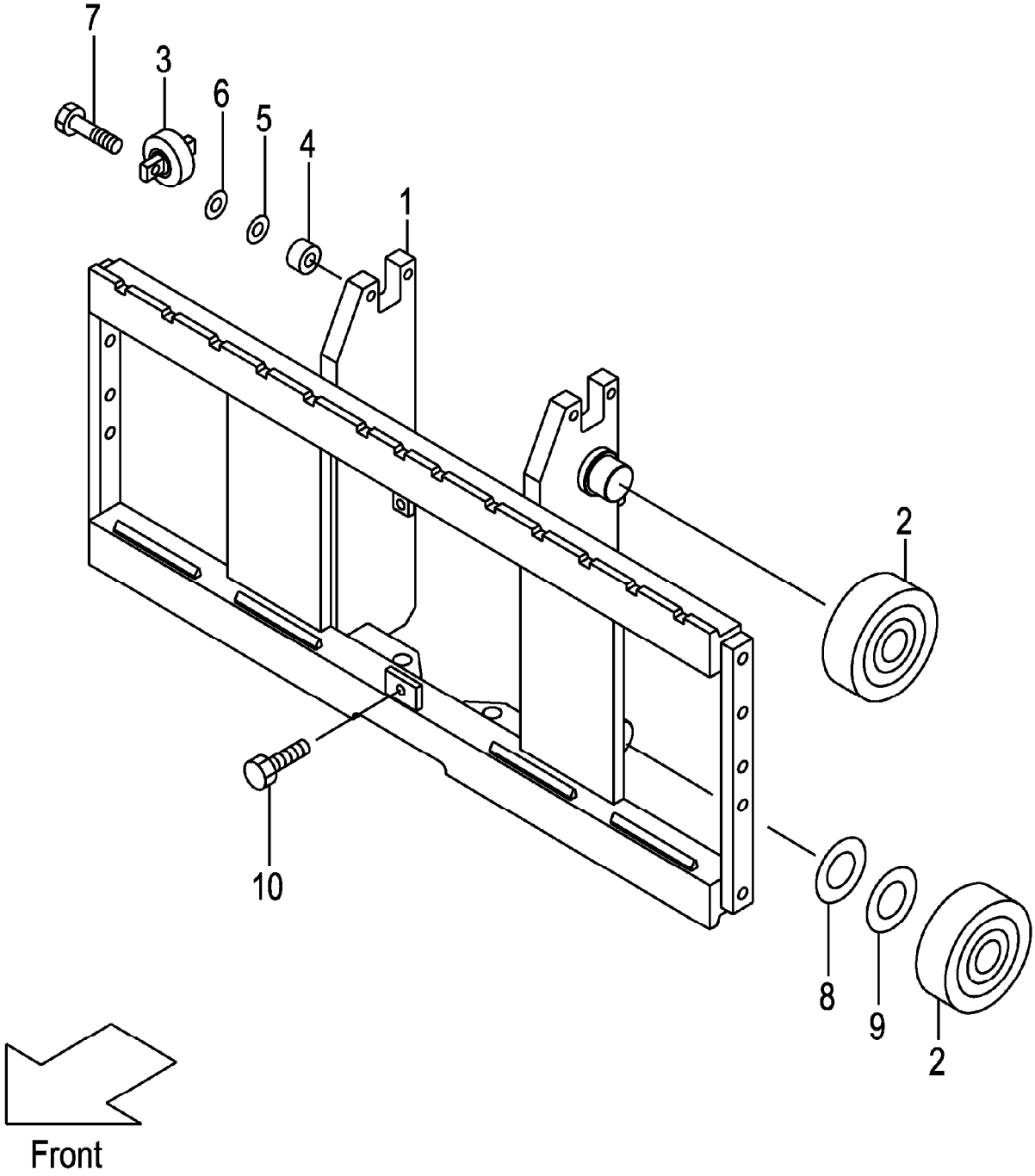

A:VFHM2N5(2T)
B:VFHM2N5(2.5T)

| Item No | Part No. | Mark | Description | Req'd | Remarks : Serial No. |
|---|---|---|---|---|---|
| 12 | 02432-01008 | + | RIVET リベット | 4 | |

# M E M O

# M E M O

# FIG.216 BACKREST [VFHM2N5]

(M7028270) ﾊﾞｯｸﾚｽﾄ

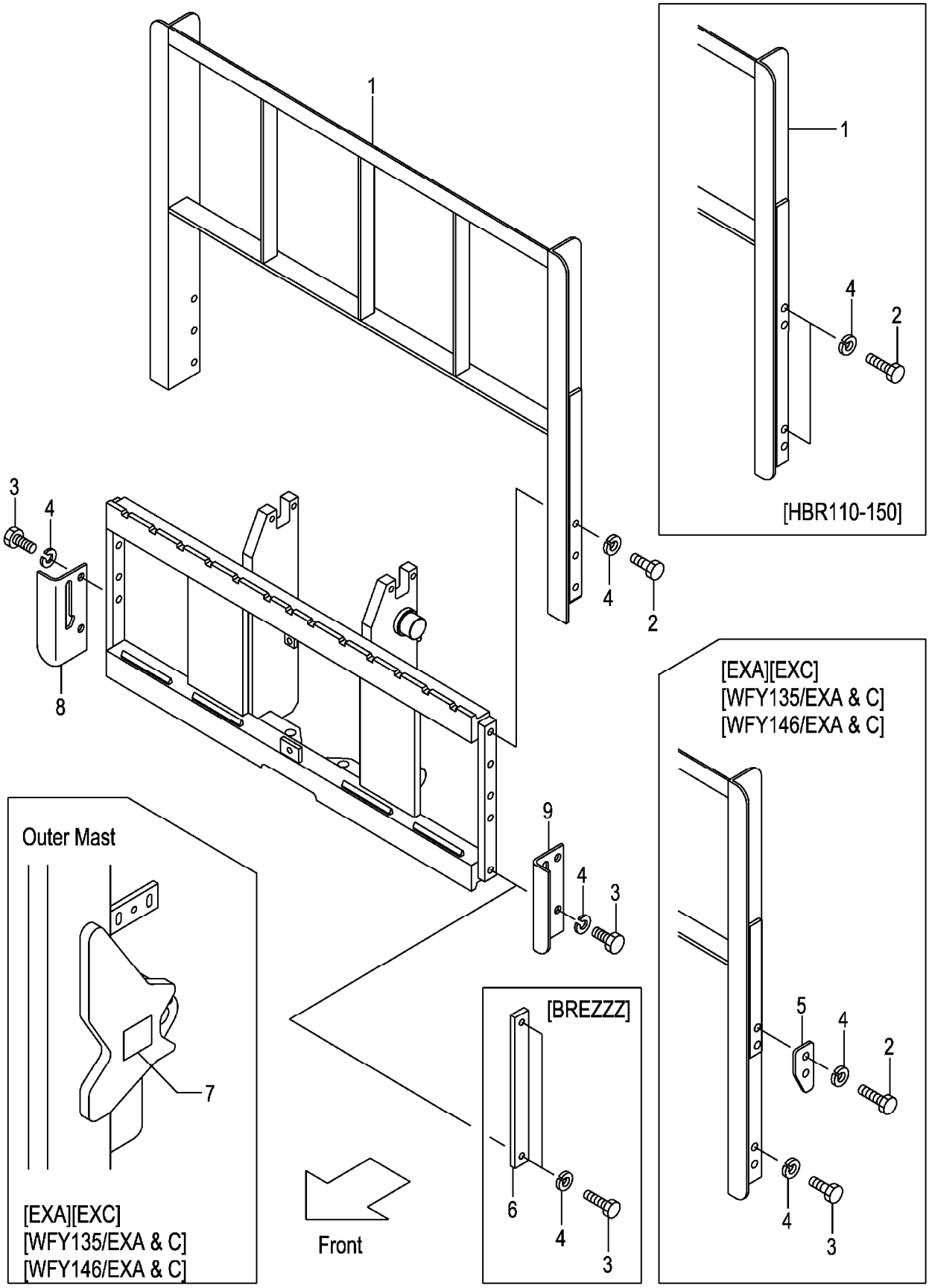

A:VFHM2N5(2T)
B:VFHM2N5(2.5T)

| Item No | Part No. | Mark | Description | | Req'd | Remarks : Serial No. |
|---|---|---|---|---|---|---|
| 1 | 22N58-22001 | | BACKREST | ﾊﾞｯｸﾚｽﾄ | 1 | (WITHOUT BREZZZ) |
| - | 534A2-74001 | | BACKREST | ﾊﾞｯｸﾚｽﾄ | 1 | [EXA][EXC] |
| - | 239A8-20101 | | BACKREST | ﾊﾞｯｸﾚｽﾄ | 1 | [HBR110] |
| - | 239A8-20111 | | BACKREST | ﾊﾞｯｸﾚｽﾄ | 1 | [HBR120] |
| - | 239A8-20121 | | BACKREST | ﾊﾞｯｸﾚｽﾄ | 1 | [HBR130] |
| - | 239A8-20131 | | BACKREST | ﾊﾞｯｸﾚｽﾄ | 1 | [HBR140] |
| - | 239A8-20141 | | BACKREST | ﾊﾞｯｸﾚｽﾄ | 1 | [HBR150] |
| - | 534A1-64402 | | BACKREST | ﾊﾞｯｸﾚｽﾄ | 1 | [WFY135] |
| - | 534A1-64412 | | BACKREST | ﾊﾞｯｸﾚｽﾄ | 1 | [WFY146] |
| - | 534A2-74101 | | BACKREST | ﾊﾞｯｸﾚｽﾄ | 1 | [WFY135/EXA][WFY135/EXC] |
| - | 534A2-74201 | | BACKREST | ﾊﾞｯｸﾚｽﾄ | 1 | [WFY146/EXA][WFY146/EXC] |
| 2 | 01100-14030 | | BOLT | ﾎﾞﾙﾄ | 6 | (WITHOUT BREZZZ) |
| - | 01100-14035 | | BOLT | ﾎﾞﾙﾄ | 4 | [EXA&C][WFY135/EXA&C] [WFY146/EXA&C] |
| - | 01100-14030 | | BOLT | ﾎﾞﾙﾄ | 8 | [HBR110-150] |
| - | 01100-14030 | | BOLT | ﾎﾞﾙﾄ | 4 | [WFY135][WFY146] |
| 3 | 01100-14025 | | BOLT | ﾎﾞﾙﾄ | 4 | (WITHOUT HBR110-150) |
| 4 | 02010-00014 | | WASHER | ﾜｯｼｬ | 10 | |
| - | 02010-00014 | | WASHER | ﾜｯｼｬ | 8 | [EXA&C][WFY135&146] [HBR110-150] [WFY135&146/EXA&C] |
| - | 02010-00014 | | WASHER | ﾜｯｼｬ | 4 | [BREZZZ] |
| 5 | 534A2-74051 | | PLATE,STOPPER | ﾌﾟﾚｰﾄ | 2 | [EXA&C][WFY135/EXA&C] [WFY146/EXA&C] |
| 6 | 23659-42161 | | PLATE,SIDE | ﾌﾟﾚｰﾄ | 2 | [BREZZZ] |
| 7 | 534A2-74301 | | DECAL,CAUTION | ﾃﾞｶﾙ | 1 | [EXA&C][WFY135/EXA&C] [WFY146/EXA&C] |
| 8 | 22N58-22111 | | PLATE,UNDER,RH | ﾌﾟﾚｰﾄ | 1 | |
| 9 | 22N58-22121 | | PLATE,UNDER,LH | ﾌﾟﾚｰﾄ | 1 | |

# FIG.217 MAST [VFHM2N5]

(M7020710) マスト

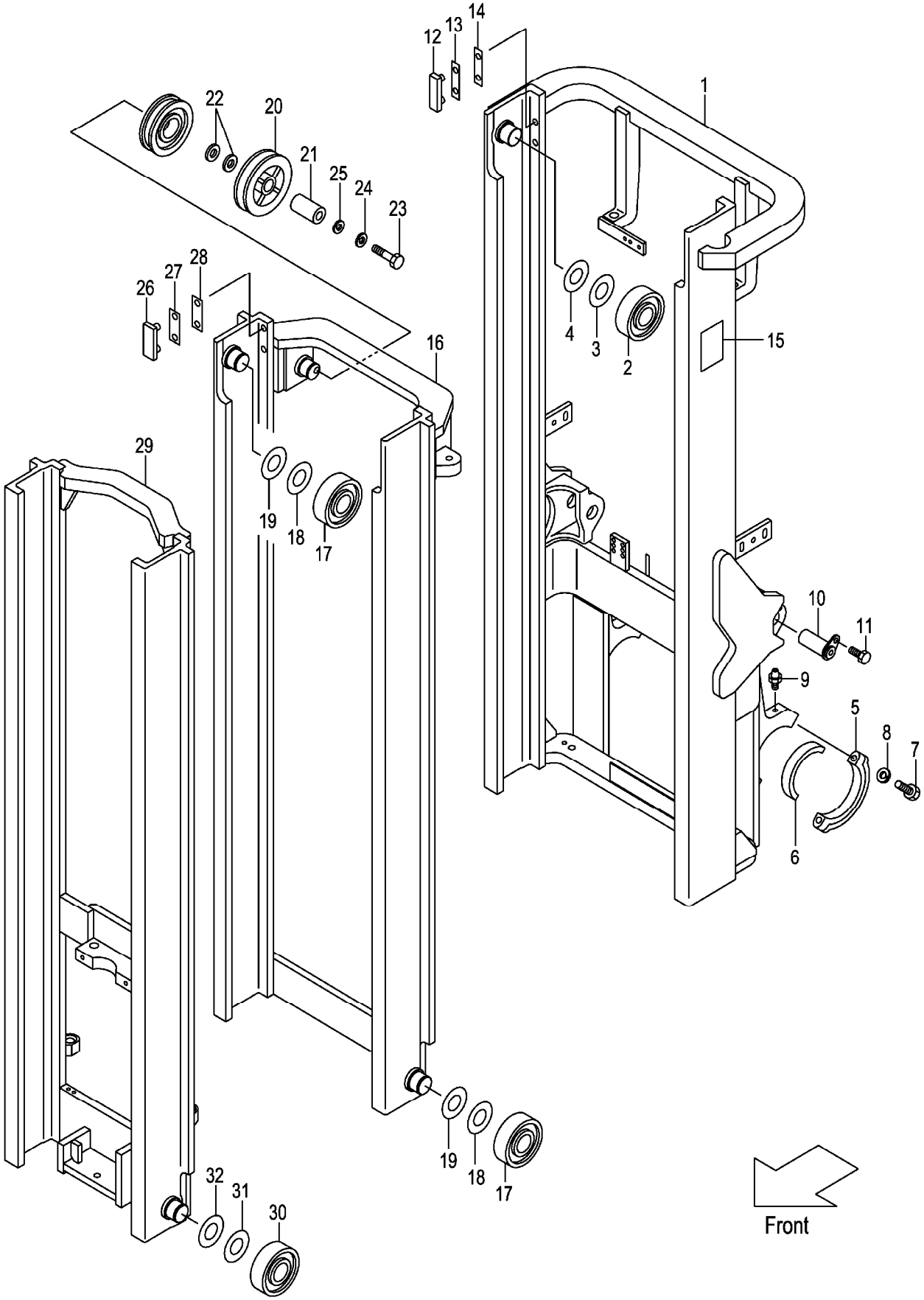

A:VFHM2N5(2T)
B:VFHM2N5(2.5T)

| Item No | Part No. | Mark | Description | | Req'd | Remarks : Serial No. |
|---|---|---|---|---|---|---|
| 1 | 22N50-70211 | | MAST,OUTER VFHM360 | ｱｳﾀﾏｽﾄ | 1 | |
| - | 22N50-70221 | | MAST,OUTER VFHM400 | ｱｳﾀﾏｽﾄ | 1 | |
| - | 22N50-70201 | | MAST,OUTER VFHM435 | ｱｳﾀﾏｽﾄ | 1 | |
| - | 22N50-70231 | | MAST,OUTER VFHM480 | ｱｳﾀﾏｽﾄ | 1 | |
| - | 22N50-70241 | | MAST,OUTER VFHM500 | ｱｳﾀﾏｽﾄ | 1 | |
| - | 22N50-70251 | | MAST,OUTER VFHM540 | ｱｳﾀﾏｽﾄ | 1 | |
| - | 22N50-70261 | | MAST,OUTER VFHM550 | ｱｳﾀﾏｽﾄ | 1 | |
| - | 22N50-70271 | | MAST,OUTER VFHM600 | ｱｳﾀﾏｽﾄ | 1 | |
| - | 22N50-70281 | | MAST,OUTER VFHM650 | ｱｳﾀﾏｽﾄ | 1 | |
| - | 22N50-70291 | | MAST,OUTER VFHM700 | ｱｳﾀﾏｽﾄ | 1 | |
| - | 22N50-70301 | | MAST,OUTER VFHM750 | ｱｳﾀﾏｽﾄ | 1 | |
| 2 | 277P8-22051 | | ROLLER,END,119.0 | ﾛｰﾗ | 2 | |
| - | 577P3-74001 | | ROLLER,END,119.0 | ﾛｰﾗ | 2 | [FC][CS35][FCS35][FCS45] [FCS55] |
| 3 | 277P8-22071 | | SHIM,T-0.5 | ｼﾑ | 12 | |
| 4 | 277P8-22081 | | SHIM,T-1.0 | ｼﾑ | 12 | |
| 5 | 277P8-32701 | | CAP | ｷｬｯﾌﾟ | 2 | |
| 6 | 214A8-02201 | | BUSHING | ﾌﾞｯｼﾝｸﾞ | 2 | |
| 7 | 01103-16065 | | BOLT | ﾎﾞﾙﾄ | 4 | |
| 8 | 02011-00016 | | WASHER | ﾜｯｼｬ | 4 | |
| 9 | 04901-00100 | | FITTING | ﾌｨｯﾃｨﾝｸﾞ | 2 | |
| 10 | 272K8-52201 | | PIN | ﾋﾟﾝ | 2 | |
| 11 | 216G8-52301 | | BOLT | ﾎﾞﾙﾄ | 2 | |
| 12 | 216G8-33401 | | SLIPPER | ｽﾘｯﾊﾟ | 2 | |
| 13 | 216G8-33361 | | SHIM,T-0.5 | ｼﾑ | 8 | |
| 14 | 216G8-33371 | | SHIM,T-1.0 | ｼﾑ | 4 | |
| 15 | 23678-06002 | | PLATE,NAME | ﾌﾟﾚｰﾄ | 1 | |
| 16 | 22N50-70411 | | MAST,MIDDLE VFHM360 | ﾐﾄﾞﾙﾏｽﾄ | 1 | |
| - | 22N50-70421 | | MAST,MIDDLE VFHM400 | ﾐﾄﾞﾙﾏｽﾄ | 1 | |
| - | 22N50-70401 | | MAST,MIDDLE VFHM435 | ﾐﾄﾞﾙﾏｽﾄ | 1 | |
| - | 22N50-70431 | | MAST,MIDDLE VFHM480 | ﾐﾄﾞﾙﾏｽﾄ | 1 | |
| - | 22N50-70441 | | MAST,MIDDLE VFHM500 | ﾐﾄﾞﾙﾏｽﾄ | 1 | |
| - | 22N50-70451 | | MAST,MIDDLE VFHM540 | ﾐﾄﾞﾙﾏｽﾄ | 1 | |
| - | 22N50-70461 | | MAST,MIDDLE VFHM550 | ﾐﾄﾞﾙﾏｽﾄ | 1 | |
| - | 22N50-70471 | | MAST,MIDDLE VFHM600 | ﾐﾄﾞﾙﾏｽﾄ | 1 | |
| - | 22N50-70481 | | MAST,MIDDLE VFHM650 | ﾐﾄﾞﾙﾏｽﾄ | 1 | |
| - | 22N50-70491 | | MAST,MIDDLE VFHM700 | ﾐﾄﾞﾙﾏｽﾄ | 1 | |
| - | 22N50-70501 | | MAST,MIDDLE VFHM750 | ﾐﾄﾞﾙﾏｽﾄ | 1 | |
| 17 | 277P8-22051 | | ROLLER,END,119.0 | ﾛｰﾗ | 4 | |
| - | 577P3-74001 | | ROLLER,END,119.0 | ﾛｰﾗ | 4 | [FC][CS35][FCS35][FCS45] [FCS55] |
| - | 277P8-22061 | | ROLLER,END,119.5 | ﾛｰﾗ | (2) | |
| - | 577P3-74011 | | ROLLER,END,119.5 | ﾛｰﾗ | (2) | [FC][CS35][FCS35][FCS45] [FCS55] |
| 18 | 277P8-22071 | | SHIM,T-0.5 | ｼﾑ | 15 | |
| 19 | 277P8-22081 | | SHIM,T-1.0 | ｼﾑ | 15 | |
| 20 | 63130-15301 | | PULLEY | ﾌﾟｰﾘ | 1 | |
| 21 | 214A0-72701 | | COLLAR | ｶﾗｰ | 1 | |
| 22 | 62050-12331 | | SPACER | ｽﾍﾟｰｻ | 2 | |
| 23 | 01100-16060 | | BOLT | ﾎﾞﾙﾄ | 1 | |

# FIG.217 MAST [VFHM2N5]

(M7020710) マスト

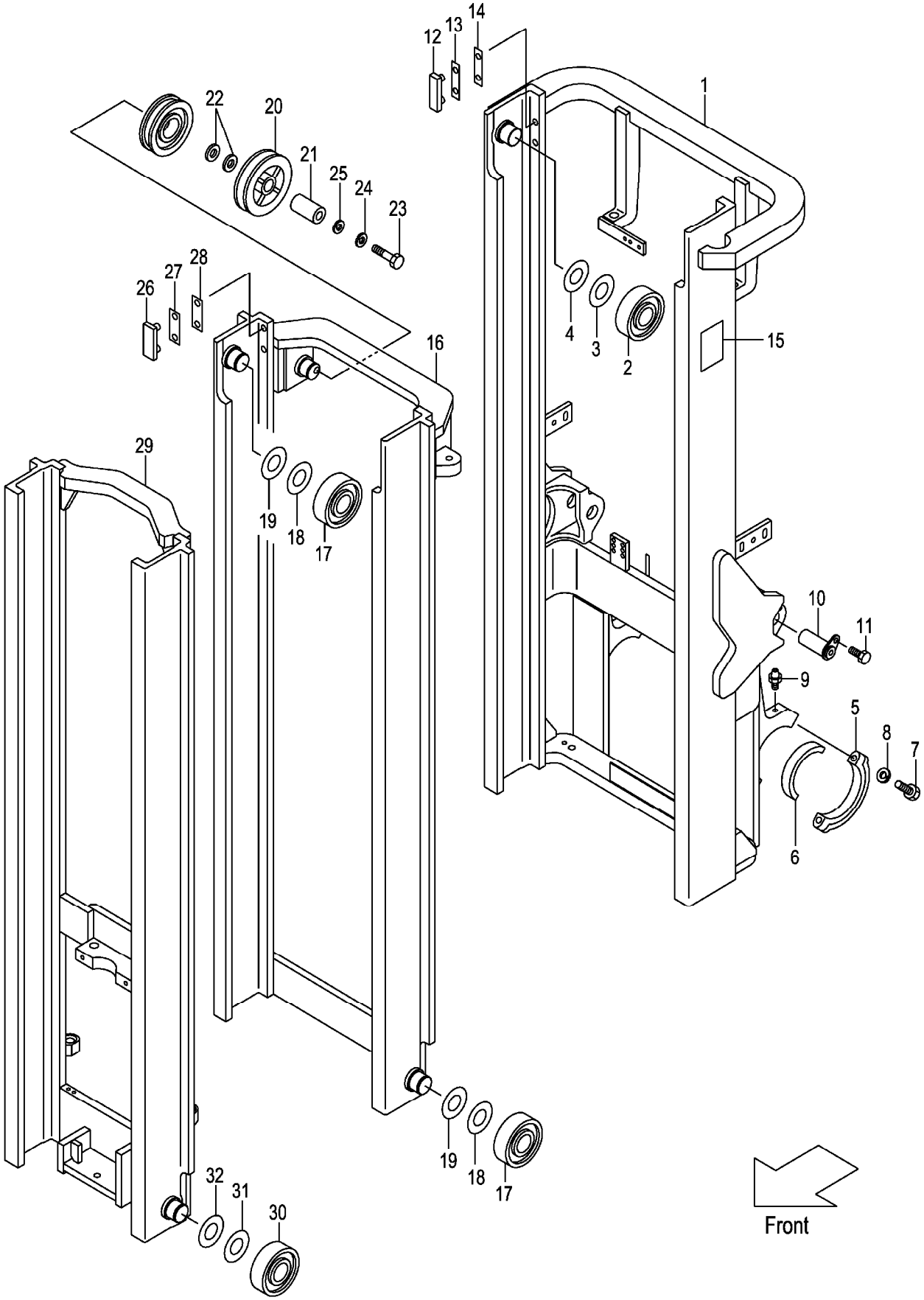

A:VFHM2N5(2T)
B:VFHM2N5(2.5T)

| Item No | Part No. | Mark | Description | | Req'd | Remarks : Serial No. |
|---|---|---|---|---|---|---|
| 24 | 02010-00016 | | WASHER | ﾜｯｼｬ | 1 | |
| 25 | 02000-00016 | | WASHER | ﾜｯｼｬ | 1 | |
| 26 | 216G8-33351 | | SLIPPER | ｽﾘｯﾊﾟ | 2 | |
| 27 | 216G8-33361 | | SHIM,T-0.5 | ｼﾑ | 4 | |
| 28 | 216G8-33371 | | SHIM,T-1.0 | ｼﾑ | 8 | |
| 29 | 22N50-70611 | | MAST,INNER VFHM360 | ｲﾝﾅﾏｽﾄ | 1 | |
| - | 22N50-70621 | | MAST,INNER VFHM400 | ｲﾝﾅﾏｽﾄ | 1 | |
| - | 22N50-70601 | | MAST,INNER VFHM435 | ｲﾝﾅﾏｽﾄ | 1 | |
| - | 22N50-70631 | | MAST,INNER VFHM480 | ｲﾝﾅﾏｽﾄ | 1 | |
| - | 22N50-70641 | | MAST,INNER VFHM500 | ｲﾝﾅﾏｽﾄ | 1 | |
| - | 22N50-70651 | | MAST,INNER VFHM540 | ｲﾝﾅﾏｽﾄ | 1 | |
| - | 22N50-70661 | | MAST,INNER VFHM550 | ｲﾝﾅﾏｽﾄ | 1 | |
| - | 22N50-70671 | | MAST,INNER VFHM600 | ｲﾝﾅﾏｽﾄ | 1 | |
| - | 22N50-70681 | | MAST,INNER VFHM650 | ｲﾝﾅﾏｽﾄ | 1 | |
| - | 22N50-70691 | | MAST,INNER VFHM700 | ｲﾝﾅﾏｽﾄ | 1 | |
| - | 22N50-70701 | | MAST,INNER VFHM750 | ｲﾝﾅﾏｽﾄ | 1 | |
| 30 | 277P8-22051 | | ROLLER,END,119.0 | ﾛｰﾗ | 2 | |
| - | 577P3-74001 | | ROLLER,END,119.0 | ﾛｰﾗ | 2 | [FC][CS35][FCS35][FCS45] [FCS55] |
| - | 277P8-22061 | | ROLLER,END,119.5 | ﾛｰﾗ | (2) | |
| - | 577P3-74011 | | ROLLER,END,119.5 | ﾛｰﾗ | (2) | [FC][CS35][FCS35][FCS45] [FCS55] |
| 31 | 277P8-22071 | | SHIM,T-0.5 | ｼﾑ | 12 | |
| 32 | 277P8-22081 | | SHIM,T-1.0 | ｼﾑ | 12 | |

# M E M O

# M E M O

# FIG.218 TILT GAUGE [VFHM2N5/(TG,PPC,PR,PRC,MPC)]

(M7020720) ﾃｨﾙﾄｹﾞｰｼﾞ

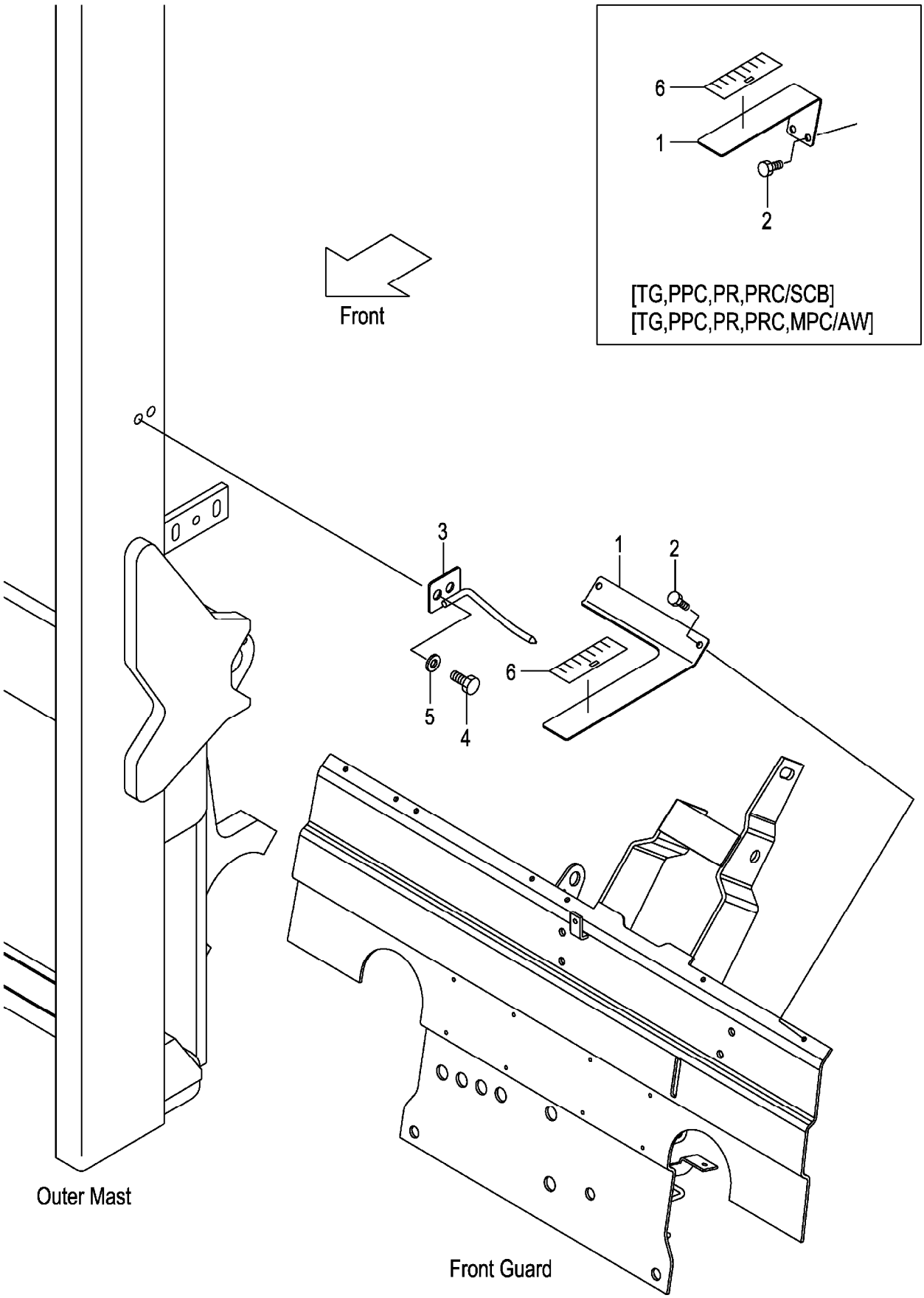

A:VFHM2N5(2T)
B:VFHM2N5(2.5T)

| Item No | Part No. | Mark | Description | | Req'd | Remarks : Serial No. |
|---|---|---|---|---|---|---|
| 1 | 62A89-21811 | | GAUGE,TILT | ｹﾞｰｼﾞ | 1 | [TG][PRC][PPC][MPC][PR] |
| - | 62A89-21831 | | GAUGE,TILT | ｹﾞｰｼﾞ | 1 | [SCB/(TG,PR,PPC,PRC,MPC)] |
| - | 62A89-21831 | | GAUGE,TILT | ｹﾞｰｼﾞ | 1 | [AW/(TG,PR,PPC,PRC,MPC)] |
| 2 | 01183-06020 | | BOLT | ﾎﾞﾙﾄ | 2 | [TG][PRC][PPC][MPC][PR] |
| - | 01183-06020 | | BOLT | ﾎﾞﾙﾄ | 2 | [SCB/(TG,PR,PPC,PRC,MPC)] |
| - | 01183-06020 | | BOLT | ﾎﾞﾙﾄ | 2 | [AW/(TG,PR,PPC,PRC,MPC)] |
| 3 | 62A89-21851 | | INDICATOR | ｲﾝｼﾞｹｰﾀ | 1 | [TG][PRC][PPC][MPC][PR] |
| - | 62A89-21851 | | INDICATOR | ｲﾝｼﾞｹｰﾀ | 1 | [SCB/(TG,PR,PPC,PRC,MPC)] |
| - | 62A89-21851 | | INDICATOR | ｲﾝｼﾞｹｰﾀ | 1 | [AW/(TG,PR,PPC,PRC,MPC)] |
| 4 | 01184-12025 | | BOLT | ﾎﾞﾙﾄ | 2 | [TG][PRC][PPC][MPC][PR] |
| - | 01184-12025 | | BOLT | ﾎﾞﾙﾄ | 2 | [SCB/(TG,PR,PPC,PRC,MPC)] |
| - | 01184-12025 | | BOLT | ﾎﾞﾙﾄ | 2 | [AW/(TG,PR,PPC,PRC,MPC)] |
| 5 | 02000-00012 | | WASHER | ﾜｯｼｬ | 2 | [TG][PRC][PPC][MPC][PR] |
| - | 02000-00012 | | WASHER | ﾜｯｼｬ | 2 | [SCB/(TG,PR,PPC,PRC,MPC)] |
| - | 02000-00012 | | WASHER | ﾜｯｼｬ | 2 | [AW/(TG,PR,PPC,PRC,MPC)] |
| 6 | 62459-23371 | | SEAL,GAUGE | ｼｰﾙ | 1 | [TG][PRC][PPC][MPC][PR] |
| - | 62459-23371 | | SEAL,GAUGE | ｼｰﾙ | 1 | [SCB/(TG,PR,PPC,PRC,MPC)] |
| - | 62459-23371 | | SEAL,GAUGE | ｼｰﾙ | 1 | [AW/(TG,PR,PPC,PRC,MPC)] |

# FIG.219 LIFT CYLINDER (FRONT) [VFHM2N5]

(M7020810) リフトシリンダ(フロント)

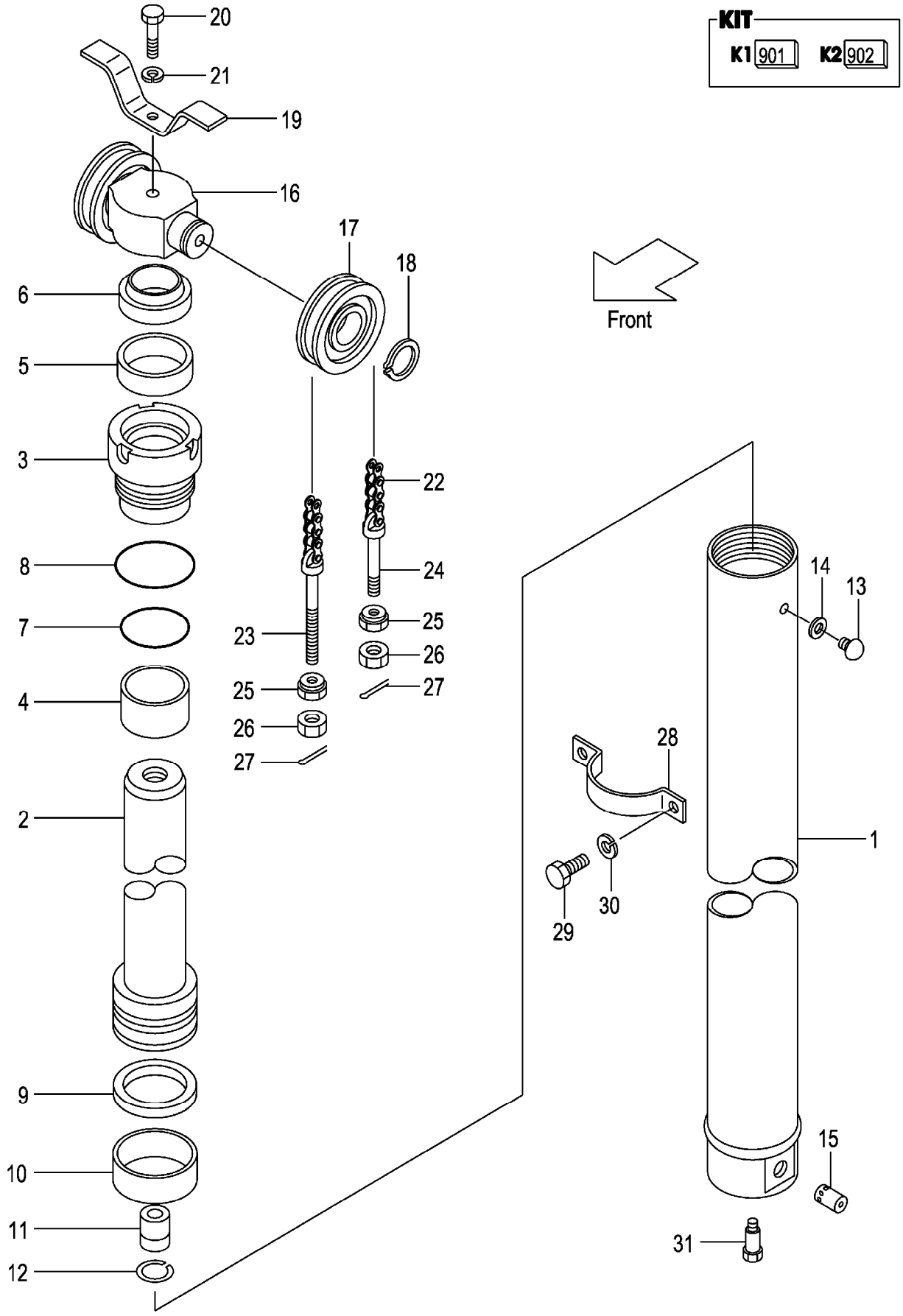

A:VFHM2N5(2T)
B:VFHM2N5(2.5T)

| Item No | Part No. | Mark | Description | | Req'd | Remarks : Serial No. |
|---|---|---|---|---|---|---|
| A1 | 212T0-80511 | | CYL-ASSY,LIFT VFHM360 | ﾘﾌﾄｼﾘﾝﾀﾞｱｯｾﾝ | 1 | INC.1-15 |
| - | 212T0-80521 | | CYL-ASSY,LIFT VFHM400 | ﾘﾌﾄｼﾘﾝﾀﾞｱｯｾﾝ | 1 | INC.1-15 |
| - | 212T0-80531 | | CYL-ASSY,LIFT VFHM435 | ﾘﾌﾄｼﾘﾝﾀﾞｱｯｾﾝ | 1 | INC.1-15 |
| - | 212T0-80501 | | CYL-ASSY,LIFT VFHM480 | ﾘﾌﾄｼﾘﾝﾀﾞｱｯｾﾝ | 1 | INC.1-15 |
| - | 212T0-80541 | | CYL-ASSY,LIFT VFHM500 | ﾘﾌﾄｼﾘﾝﾀﾞｱｯｾﾝ | 1 | INC.1-15 |
| - | 212T0-80551 | | CYL-ASSY,LIFT VFHM540 | ﾘﾌﾄｼﾘﾝﾀﾞｱｯｾﾝ | 1 | INC.1-15 |
| - | 212T0-80561 | | CYL-ASSY,LIFT VFHM550 | ﾘﾌﾄｼﾘﾝﾀﾞｱｯｾﾝ | 1 | INC.1-15 |
| - | 212T0-80571 | | CYL-ASSY,LIFT VFHM600 | ﾘﾌﾄｼﾘﾝﾀﾞｱｯｾﾝ | 1 | INC.1-15 |
| - | 212T0-80581 | | CYL-ASSY,LIFT VFHM650 | ﾘﾌﾄｼﾘﾝﾀﾞｱｯｾﾝ | 1 | INC.1-15 |
| - | 212T0-80591 | | CYL-ASSY,LIFT VFHM700 | ﾘﾌﾄｼﾘﾝﾀﾞｱｯｾﾝ | 1 | INC.1-15 |
| - | 212T0-80601 | | CYL-ASSY,LIFT VFHM750 | ﾘﾌﾄｼﾘﾝﾀﾞｱｯｾﾝ | 1 | INC.1-15 |
| 901 | B-B675B-00003 | K1 | KIT,HEAD,CYL | ｼﾘﾝﾀﾞﾍｯﾄﾞｷｯﾄ | 1 | INC.3,4 |
| 902 | B-B675A-00006 | K2 | KIT,REPAIR | ﾘﾍﾟｱｷｯﾄ | 1 | INC.5-10,14 |
| 1 | B-B6717-87601 | | BODY,CYL VFHM360 | ﾎﾞﾃﾞｨ | 1 | |
| - | B-B6717-87701 | | BODY,CYL VFHM400 | ﾎﾞﾃﾞｨ | 1 | |
| - | B-B6717-87801 | | BODY,CYL VFHM435 | ﾎﾞﾃﾞｨ | 1 | |
| - | B-B6717-87901 | | BODY,CYL VFHM480 | ﾎﾞﾃﾞｨ | 1 | |
| - | B-B6717-88001 | | BODY,CYL VFHM500 | ﾎﾞﾃﾞｨ | 1 | |
| - | B-B6717-88101 | | BODY,CYL VFHM540 | ﾎﾞﾃﾞｨ | 1 | |
| - | B-B6717-88201 | | BODY,CYL VFHM550 | ﾎﾞﾃﾞｨ | 1 | |
| - | B-B6717-88301 | | BODY,CYL VFHM600 | ﾎﾞﾃﾞｨ | 1 | |
| - | B-B6717-88401 | | BODY,CYL VFHM650 | ﾎﾞﾃﾞｨ | 1 | |
| - | B-B6717-88501 | | BODY,CYL VFHM700 | ﾎﾞﾃﾞｨ | 1 | |
| - | B-B6717-88601 | | BODY,CYL VFHM750 | ﾎﾞﾃﾞｨ | 1 | |
| 2 | B-B6717-87602 | | ROD VFHM360 | ﾛｯﾄﾞ | 1 | |
| - | B-B6717-87702 | | ROD VFHM400 | ﾛｯﾄﾞ | 1 | |
| - | B-B6717-87802 | | ROD VFHM435 | ﾛｯﾄﾞ | 1 | |
| - | B-B6717-87902 | | ROD VFHM480 | ﾛｯﾄﾞ | 1 | |
| - | B-B6717-88002 | | ROD VFHM500 | ﾛｯﾄﾞ | 1 | |
| - | B-B6717-88102 | | ROD VFHM540 | ﾛｯﾄﾞ | 1 | |
| - | B-B6717-88202 | | ROD VFHM550 | ﾛｯﾄﾞ | 1 | |
| - | B-B6717-88302 | | ROD VFHM600 | ﾛｯﾄﾞ | 1 | |
| - | B-B6717-88402 | | ROD VFHM650 | ﾛｯﾄﾞ | 1 | |
| - | B-B6717-88502 | | ROD VFHM700 | ﾛｯﾄﾞ | 1 | |
| - | B-B6717-88602 | | ROD VFHM750 | ﾛｯﾄﾞ | 1 | |
| 3 | B-B6121-75007 | * | HEAD | ﾍｯﾄﾞ | 1 | |
| 4 | B-30131-55009 | * | BUSHING | ﾌﾞｯｼﾝｸﾞ | 1 | |
| 5 | B-30961-55013 | * | U-RING | Uﾘﾝｸﾞ | 1 | |
| 6 | B-30191-55050 | * | RING,WIPER | ﾘﾝｸﾞ | 1 | |
| 7 | B-95123-07000 | * | O-RING | Oﾘﾝｸﾞ | 1 | |
| 8 | B-95151-07500 | * | O-RING | Oﾘﾝｸﾞ | 1 | |
| 9 | B-B6983-75007 | * | RING,SEAL | ﾘﾝｸﾞ | 1 | |
| 10 | B-B6181-75007 | * | RING,SLIDE | ﾘﾝｸﾞ | 1 | |
| 11 | B-C4300-22001 | | VALVE,CHECK | ﾊﾞﾙﾌﾞ | 1 | |
| 12 | B-94721-22101 | | RING,SNAP | ｽﾅｯﾌﾟﾘﾝｸﾞ | 1 | |
| 13 | B-B6521-90004 | | PLUG | ﾌﾟﾗｸﾞ | 1 | |
| 14 | B-B6711-00001 | * | GASKET | ｶﾞｽｹｯﾄ | 1 | |
| 15 | B-26570-30115 | | VALVE | ﾊﾞﾙﾌﾞ | 1 | |
| 16 | 212T0-82001 | | HEAD,PISTON | ﾍｯﾄﾞ | 1 | |
| 17 | 234A8-43501 | | SHEAVE | ｼｰﾌﾞ | 2 | |

# FIG.219 LIFT CYLINDER (FRONT) [VFHM2N5]

(M7020810) リフトシリンダ(フロント)

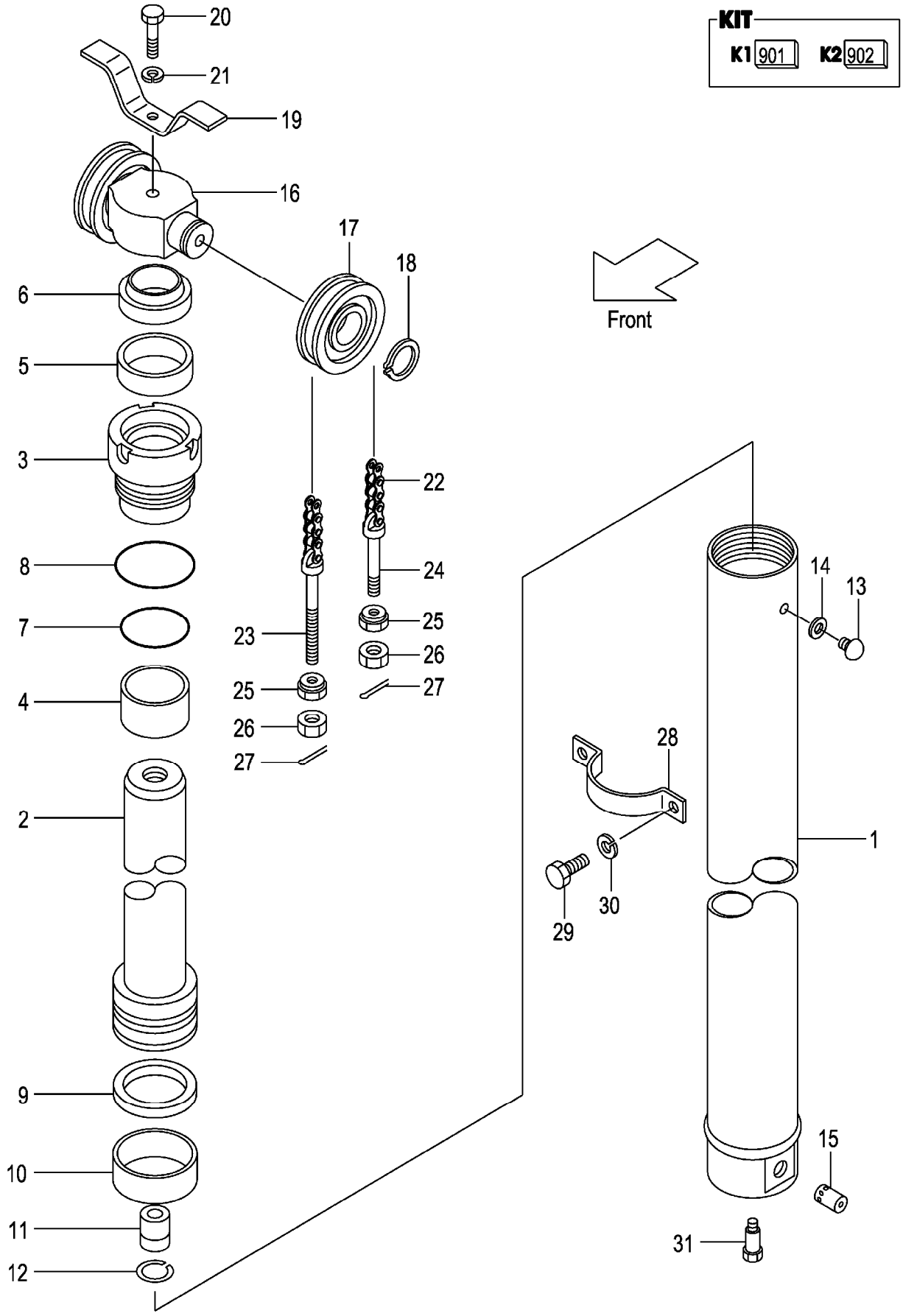

A:VFHM2N5(2T)
B:VFHM2N5(2.5T)

| Item No | Part No. | Mark | Description | | Req'd | Remarks : Serial No. |
|---|---|---|---|---|---|---|
| - | 22208-40031 | | SHEAVE | ｼｰﾌﾞ | 2 | [FC][FCS35][FCS45][FCS55] |
| 18 | 02100-00040 | | RING,SNAP | ｽﾅｯﾌﾟﾘﾝｸﾞ | 2 | |
| 19 | 214A0-82681 | | STOPPER | ｽﾄｯﾊﾟ | 1 | |
| 20 | 01100-16070 | | BOLT | ﾎﾞﾙﾄ | 1 | |
| 21 | 02010-00016 | | WASHER | ﾜｯｼｬ | 1 | |
| 22 | 22679-45651 | | CHAIN,LEAF VFHM360 | ﾁｪｰﾝ | 2 | |
| - | 22679-45731 | | CHAIN,LEAF VFHM400 | ﾁｪｰﾝ | 2 | |
| - | 22679-45791 | | CHAIN,LEAF VFHM435 | ﾁｪｰﾝ | 2 | |
| - | 22679-45871 | | CHAIN,LEAF VFHM480 | ﾁｪｰﾝ | 2 | |
| - | 22679-45911 | | CHAIN,LEAF VFHM500 | ﾁｪｰﾝ | 2 | |
| - | 22679-45991 | | CHAIN,LEAF VFHM540 | ﾁｪｰﾝ | 2 | |
| - | 22679-46011 | | CHAIN,LEAF VFHM550 | ﾁｪｰﾝ | 2 | |
| - | 22679-46111 | | CHAIN,LEAF VFHM600 | ﾁｪｰﾝ | 2 | |
| - | 22679-46211 | | CHAIN,LEAF VFHM650 | ﾁｪｰﾝ | 2 | |
| - | 22679-46331 | | CHAIN,LEAF VFHM700 | ﾁｪｰﾝ | 2 | |
| - | 22679-46411 | | CHAIN,LEAF VFHM750 | ﾁｪｰﾝ | 2 | |
| - | 09001-10037 | | CHAIN,ROLLER VFHM360 | ﾁｪｰﾝ | 2 | [FC][FCS35][FCS45][FCS55] |
| - | 09001-10041 | | CHAIN,ROLLER VFHM400 | ﾁｪｰﾝ | 2 | [FC][FCS35][FCS45][FCS55] |
| - | 09001-10045 | | CHAIN,ROLLER VFHM435 | ﾁｪｰﾝ | 2 | [FC][FCS35][FCS45][FCS55] |
| - | 09001-10051 | | CHAIN,ROLLER VFHM480 | ﾁｪｰﾝ | 2 | [FC][FCS35][FCS45][FCS55] |
| - | 09001-10053 | | CHAIN,ROLLER VFHM500 | ﾁｪｰﾝ | 2 | [FC][FCS35][FCS45][FCS55] |
| - | 09001-10057 | | CHAIN,ROLLER VFHM540 | ﾁｪｰﾝ | 2 | [FC][FCS35][FCS45][FCS55] |
| - | 09001-10059 | | CHAIN,ROLLER VFHM550 | ﾁｪｰﾝ | 2 | [FC][FCS35][FCS45][FCS55] |
| - | 09001-10065 | | CHAIN,ROLLER VFHM600 | ﾁｪｰﾝ | 2 | [FC][FCS35][FCS45][FCS55] |
| - | 09001-10071 | | CHAIN,ROLLER VFHM650 | ﾁｪｰﾝ | 2 | [FC][FCS35][FCS45][FCS55] |
| - | 09001-10077 | | CHAIN,ROLLER VFHM700 | ﾁｪｰﾝ | 2 | [FC][FCS35][FCS45][FCS55] |
| - | 09001-10083 | | CHAIN,ROLLER VFHM750 | ﾁｪｰﾝ | 2 | [FC][FCS35][FCS45][FCS55] |
| 23 | 52672-72231 | | PIN,ANCHOR | ﾋﾟﾝ | 2 | |
| - | 22218-42111 | | PIN,ANCHOR | ﾋﾟﾝ | 2 | [FC][FCS35][FCS45][FCS55] |
| 24 | 23500-82001 | | PIN,ANCHOR | ﾋﾟﾝ | 2 | |
| - | 231A0-82001 | | PIN,ANCHOR | ﾋﾟﾝ | 2 | [FC][FCS35][FCS45][FCS55] |
| 25 | 22218-40191 | | NUT | ﾅｯﾄ | 4 | |
| 26 | 01400-00018 | | NUT | ﾅｯﾄ | 4 | |
| 27 | 02200-03030 | | PIN,COTTER | ﾋﾟﾝ | 4 | |
| 28 | 212T0-82101 | | SUPPORT | ｻﾎﾟｰﾄ | 1 | |
| 29 | 01103-10018 | | BOLT | ﾎﾞﾙﾄ | 2 | |
| 30 | 02011-00010 | | WASHER | ﾜｯｼｬ | 2 | |
| 31 | 214A0-82831 | | BOLT | ﾎﾞﾙﾄ | 1 | |

# M E M O

# M E M O

# FIG.220 LIFT CYLINDER (REAR) [VFHM2N5]

(M7020820) リフトシリンダ(リヤー)

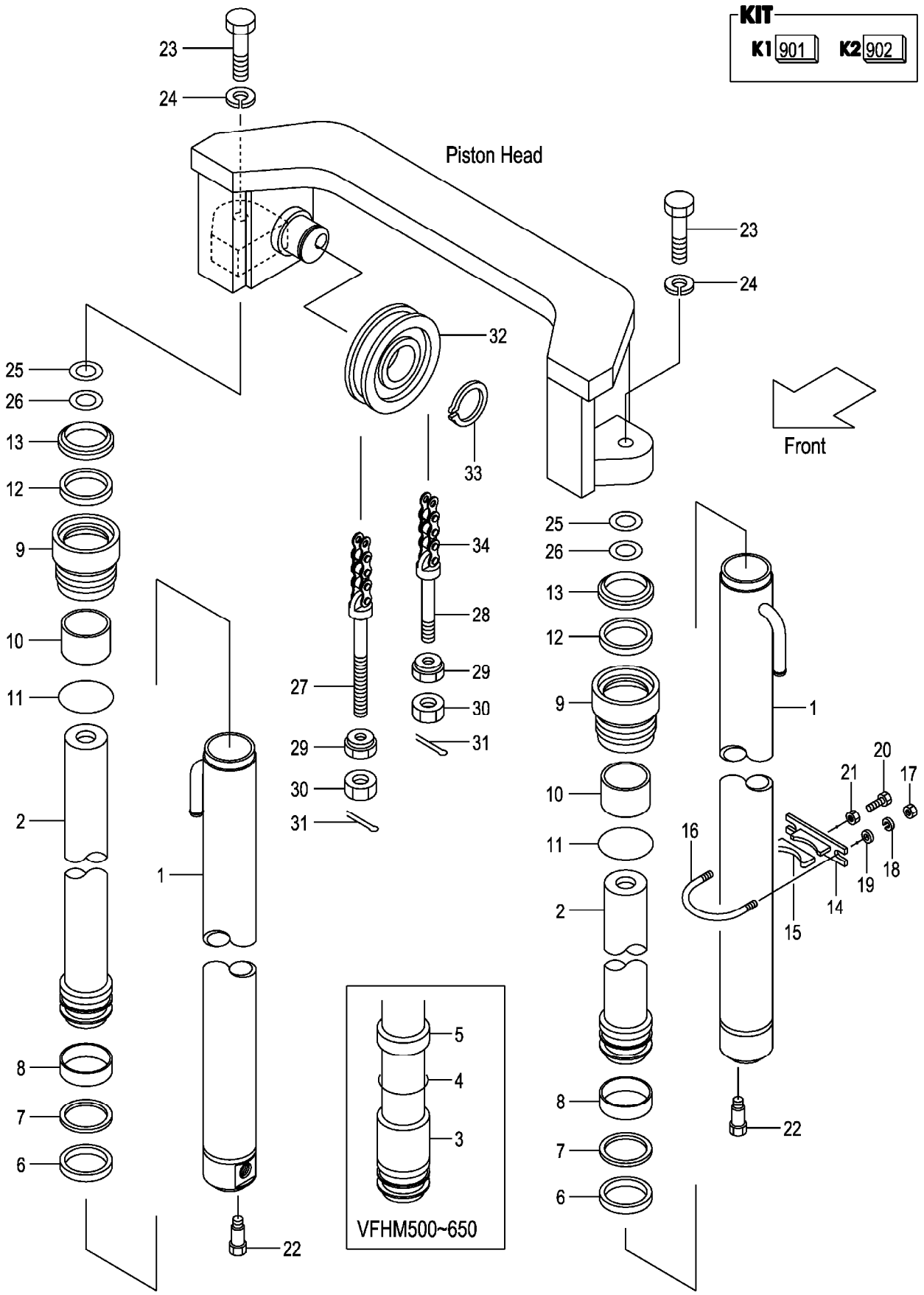

A:VFHM2N5(2T)
B:VFHM2N5(2.5T)

| Item No | Part No. | Mark | Description | | Req'd | Remarks : Serial No. |
|---|---|---|---|---|---|---|
| A1 | 22N50-81611 | | CYL-ASSY,LIFT VFHM360 | ﾘﾌﾄｼﾘﾝﾀﾞｱｯｾﾝ | 2 | INC.1,2,6-13 |
| - | 22N50-81621 | | CYL-ASSY,LIFT VFHM400 | ﾘﾌﾄｼﾘﾝﾀﾞｱｯｾﾝ | 2 | INC.1,2,6-13 |
| - | 22N50-81601 | | CYL-ASSY,LIFT VFHM435 | ﾘﾌﾄｼﾘﾝﾀﾞｱｯｾﾝ | 2 | INC.1,2,6-13 |
| - | 22N50-81631 | | CYL-ASSY,LIFT VFHM480 | ﾘﾌﾄｼﾘﾝﾀﾞｱｯｾﾝ | 2 | INC.1,2,6-13 |
| - | 22N50-81641 | | CYL-ASSY,LIFT VFHM500 | ﾘﾌﾄｼﾘﾝﾀﾞｱｯｾﾝ | 2 | INC.1-13 |
| - | 22N50-81651 | | CYL-ASSY,LIFT VFHM540 | ﾘﾌﾄｼﾘﾝﾀﾞｱｯｾﾝ | 2 | INC.1-13 |
| - | 22N50-81661 | | CYL-ASSY,LIFT VFHM550 | ﾘﾌﾄｼﾘﾝﾀﾞｱｯｾﾝ | 2 | INC.1-13 |
| - | 22N50-81671 | | CYL-ASSY,LIFT VFHM600 | ﾘﾌﾄｼﾘﾝﾀﾞｱｯｾﾝ | 2 | INC.1-13 |
| - | 22N50-81681 | | CYL-ASSY,LIFT VFHM650 | ﾘﾌﾄｼﾘﾝﾀﾞｱｯｾﾝ | 2 | INC.1-13 |
| - | 22N50-81691 | | CYL-ASSY,LIFT VFHM700 | ﾘﾌﾄｼﾘﾝﾀﾞｱｯｾﾝ | 2 | INC.1,2,6-13 |
| - | 22N50-81701 | | CYL-ASSY,LIFT VFHM750 | ﾘﾌﾄｼﾘﾝﾀﾞｱｯｾﾝ | 2 | INC.1,2,6-13 |
| 901 | B-3050B-00119 | K1 | KIT,HEAD,CYL | ｼﾘﾝﾀﾞﾍｯﾄﾞｷｯﾄ | 2 | INC.9,10 |
| 902 | B-3050A-00093 | K2 | KIT,REPAIR | ﾘﾍﾟｱｷｯﾄ | 2 | INC.6,7,11-13 |
| 1 | B-B6567-10601 | | BODY,CYL VFHM360 | ﾎﾞﾃﾞｨ | 2 | |
| - | B-B6567-10701 | | BODY,CYL VFHM400 | ﾎﾞﾃﾞｨ | 2 | |
| - | B-B6567-10801 | | BODY,CYL VFHM435 | ﾎﾞﾃﾞｨ | 2 | |
| - | B-B6567-10901 | | BODY,CYL VFHM480 | ﾎﾞﾃﾞｨ | 2 | |
| - | B-B6567-11001 | | BODY,CYL VFHM500 | ﾎﾞﾃﾞｨ | 2 | |
| - | B-B6567-11101 | | BODY,CYL VFHM540 | ﾎﾞﾃﾞｨ | 2 | |
| - | B-B6567-11201 | | BODY,CYL VFHM550 | ﾎﾞﾃﾞｨ | 2 | |
| - | B-B6567-11301 | | BODY,CYL VFHM600 | ﾎﾞﾃﾞｨ | 2 | |
| - | B-B6567-11401 | | BODY,CYL VFHM650 | ﾎﾞﾃﾞｨ | 2 | |
| - | B-B6567-11501 | | BODY,CYL VFHM700 | ﾎﾞﾃﾞｨ | 2 | |
| - | B-B6567-11601 | | BODY,CYL VFHM750 | ﾎﾞﾃﾞｨ | 2 | |
| 2 | B-B6567-10602 | | ROD VFHM360 | ﾛｯﾄﾞ | 2 | |
| - | B-B6567-10702 | | ROD VFHM400 | ﾛｯﾄﾞ | 2 | |
| - | B-B6567-10802 | | ROD VFHM435 | ﾛｯﾄﾞ | 2 | |
| - | B-B6567-10902 | | ROD VFHM480 | ﾛｯﾄﾞ | 2 | |
| - | B-B6567-11002 | | ROD VFHM500 | ﾛｯﾄﾞ | 2 | |
| - | B-B6567-11102 | | ROD VFHM540 | ﾛｯﾄﾞ | 2 | |
| - | B-B6567-11202 | | ROD VFHM550 | ﾛｯﾄﾞ | 2 | |
| - | B-B6567-11302 | | ROD VFHM600 | ﾛｯﾄﾞ | 2 | |
| - | B-B6567-11402 | | ROD VFHM650 | ﾛｯﾄﾞ | 2 | |
| - | B-B6567-11502 | | ROD VFHM700 | ﾛｯﾄﾞ | 2 | |
| - | B-B6567-11602 | | ROD VFHM750 | ﾛｯﾄﾞ | 2 | |
| 3 | B-B6111-40022 | | SPACER VFHM500 | ｽﾍﾟｰｻ | 2 | |
| - | B-B6111-40034 | | SPACER VFHM540 | ｽﾍﾟｰｻ | 2 | |
| - | B-B6111-40022 | | SPACER VFHM550 | ｽﾍﾟｰｻ | 2 | |
| - | B-B6111-40023 | | SPACER VFHM600 | ｽﾍﾟｰｻ | 2 | |
| - | B-B6111-40026 | | SPACER VFHM650 | ｽﾍﾟｰｻ | 2 | |
| 4 | B-95151-04000 | | O-RING | Oﾘﾝｸﾞ | 2 | (VFHM500-650) |
| 5 | B-30096-02207 | | WEARING | ｳｪｱﾘﾝｸﾞ | 2 | (VFHM500-650) |
| 6 | B-30161-50046 | * | U-RING | Uﾘﾝｸﾞ | 2 | |
| 7 | B-30461-50039 | * | RING,BACK-UP | ﾘﾝｸﾞ | 2 | |
| 8 | B-30131-50018 | | WEARING | ｳｪｱﾘﾝｸﾞ | 2 | |
| 9 | B-30121-50102 | * | CAP,CYL | ｷｬｯﾌﾟ | 2 | |
| 10 | B-30131-40017 | * | BUSHING | ﾌﾞｯｼﾝｸﾞ | 2 | |
| 11 | B-30161-91774 | * | O-RING | Oﾘﾝｸﾞ | 2 | |
| 12 | B-30961-04012 | * | PACKING | ﾊﾟｯｷﾝｸﾞ | 2 | |
| 13 | B-30191-40025 | * | SEAL,DUST | ｼｰﾙ | 2 | |

# FIG.220 LIFT CYLINDER (REAR) [VFHM2N5]

(M7020820) リフトシリンダ(リヤー)

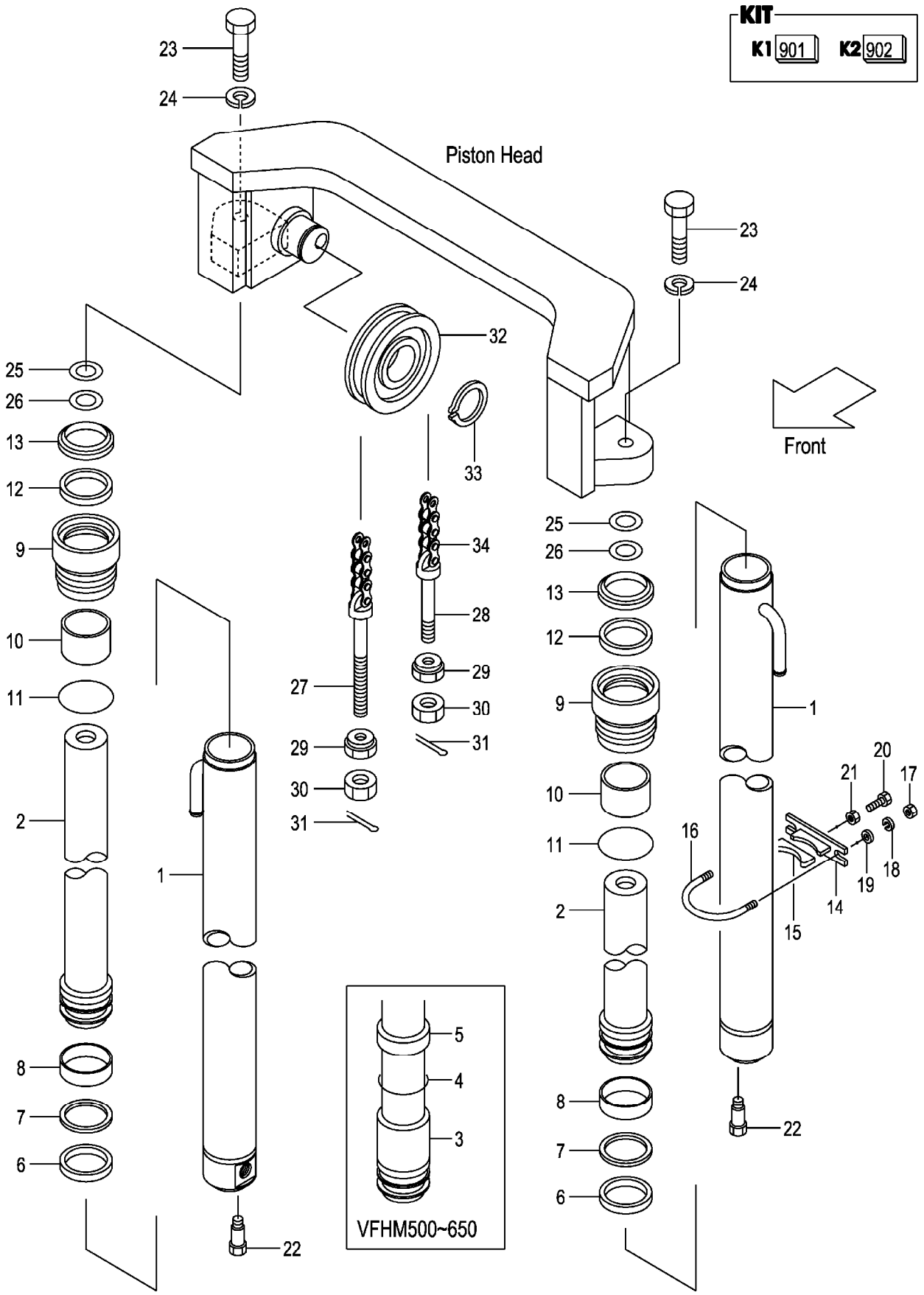

A:VFHM2N5(2T)
B:VFHM2N5(2.5T)

| Item No | Part No. | Mark | Description | | Req'd | Remarks : Serial No. |
|---|---|---|---|---|---|---|
| A2 | 215E8-42171 | | SUPPORT-ASSY | ｻﾎﾟｰﾄｱｯｾﾝ | 2 | (VFHM360-550) INC.14,15 |
| - | 215E8-42171 | | SUPPORT-ASSY | ｻﾎﾟｰﾄｱｯｾﾝ | 4 | (VFHM600-750) INC.14,15 |
| 14 | 215E8-42181 | | SUPPORT | ｻﾎﾟｰﾄ | 2 | (VFHM360-550) |
| - | 215E8-42181 | | SUPPORT | ｻﾎﾟｰﾄ | 4 | (VFHM600-750) |
| 15 | 24868-42111 | | RUBBER | ﾗﾊﾞｰ | 2 | (VFHM360-550) |
| - | 24868-42111 | | RUBBER | ﾗﾊﾞｰ | 4 | (VFHM600-750) |
| 16 | 234A8-42551 | | U-BOLT | Uﾎﾞﾙﾄ | 2 | (VFHM360-550) |
| - | 234A8-42551 | | U-BOLT | Uﾎﾞﾙﾄ | 4 | (VFHM600-750) |
| 17 | 234A8-42561 | | NUT | ﾅｯﾄ | 4 | (VFHM360-550) |
| - | 234A8-42561 | | NUT | ﾅｯﾄ | 8 | (VFHM600-750) |
| 18 | 02010-20010 | | WASHER | ﾜｯｼｬ | 4 | (VFHM360-550) |
| - | 02010-20010 | | WASHER | ﾜｯｼｬ | 8 | (VFHM600-750) |
| 19 | 02000-20010 | | WASHER | ﾜｯｼｬ | 4 | (VFHM360-550) |
| - | 02000-20010 | | WASHER | ﾜｯｼｬ | 8 | (VFHM600-750) |
| 20 | 232A8-42201 | | BOLT | ﾎﾞﾙﾄ | 2 | (VFHM360-550) |
| - | 232A8-42201 | | BOLT | ﾎﾞﾙﾄ | 4 | (VFHM600-750) |
| 21 | 234A8-42571 | | NUT | ﾅｯﾄ | 2 | (VFHM360-550) |
| - | 234A8-42571 | | NUT | ﾅｯﾄ | 4 | (VFHM600-750) |
| 22 | 214A8-42661 | | BOLT | ﾎﾞﾙﾄ | 2 | |
| 23 | 01103-14040 | | BOLT | ﾎﾞﾙﾄ | 2 | |
| 24 | 02011-00014 | | WASHER | ﾜｯｼｬ | 2 | |
| 25 | 22517-40051 | | SHIM,T-1.0 | ｼﾑ | 10 | |
| 26 | 22717-40081 | | SHIM,T-0.5 | ｼﾑ | 10 | |
| 27 | 52672-72231 | | PIN,ANCHOR | ﾋﾟﾝ | 2 | |
| - | 22218-42111 | | PIN,ANCHOR | ﾋﾟﾝ | 2 | [FC][FCS35][FCS45][FCS55] |
| 28 | 23500-82001 | | PIN,ANCHOR | ﾋﾟﾝ | 2 | |
| - | 23658-42531 | | PIN,ANCHOR | ﾋﾟﾝ | 2 | [FC][FCS35][FCS45][FCS55] |
| 29 | 22218-40191 | | NUT | ﾅｯﾄ | 4 | |
| 30 | 01400-00018 | | NUT | ﾅｯﾄ | 4 | |
| 31 | 02200-03030 | | PIN,COTTER | ﾋﾟﾝ | 4 | |
| 32 | 234A8-43501 | | SHEAVE | ｼｰﾌﾞ | 2 | |
| - | 22208-40031 | | SHEAVE | ｼｰﾌﾞ | 2 | [FC][FCS35][FCS45][FCS55] |
| 33 | 02100-00040 | | RING,SNAP | ｽﾅｯﾌﾟﾘﾝｸﾞ | 2 | |
| 34 | 22679-45831 | | CHAIN,LEAF VFHM360 | ﾁｪｰﾝ | 2 | |
| - | 22679-45891 | | CHAIN,LEAF VFHM400 | ﾁｪｰﾝ | 2 | |
| - | 22679-45951 | | CHAIN,LEAF VFHM435 | ﾁｪｰﾝ | 2 | |
| - | 22679-46031 | | CHAIN,LEAF VFHM480 | ﾁｪｰﾝ | 2 | |
| - | 22679-46091 | | CHAIN,LEAF VFHM500 | ﾁｪｰﾝ | 2 | |
| - | 22679-46151 | | CHAIN,LEAF VFHM540 | ﾁｪｰﾝ | 2 | |
| - | 22679-46171 | | CHAIN,LEAF VFHM550 | ﾁｪｰﾝ | 2 | |
| - | 22679-46271 | | CHAIN,LEAF VFHM600 | ﾁｪｰﾝ | 2 | |
| - | 22679-46391 | | CHAIN,LEAF VFHM650 | ﾁｪｰﾝ | 2 | |
| - | 22679-46491 | | CHAIN,LEAF VFHM700 | ﾁｪｰﾝ | 2 | |
| - | 22679-46591 | | CHAIN,LEAF VFHM750 | ﾁｪｰﾝ | 2 | |
| - | 09001-10049 | | CHAIN,ROLLER VFHM360 | ﾁｪｰﾝ | 2 | [FC][FCS35][FCS45][FCS55] |
| - | 09001-10053 | | CHAIN,ROLLER VFHM400 | ﾁｪｰﾝ | 2 | [FC][FCS35][FCS45][FCS55] |
| - | 09001-10057 | | CHAIN,ROLLER VFHM435 | ﾁｪｰﾝ | 2 | [FC][FCS35][FCS45][FCS55] |
| - | 09001-10061 | | CHAIN,ROLLER VFHM480 | ﾁｪｰﾝ | 2 | [FC][FCS35][FCS45][FCS55] |
| - | 09001-10065 | | CHAIN,ROLLER VFHM500 | ﾁｪｰﾝ | 2 | [FC][FCS35][FCS45][FCS55] |
| - | 09001-10069 | | CHAIN,ROLLER VFHM540 | ﾁｪｰﾝ | 2 | [FC][FCS35][FCS45][FCS55] |

# FIG.220 LIFT CYLINDER (REAR) [VFHM2N5]

(M7020820) リフトシリンダ(リヤー)

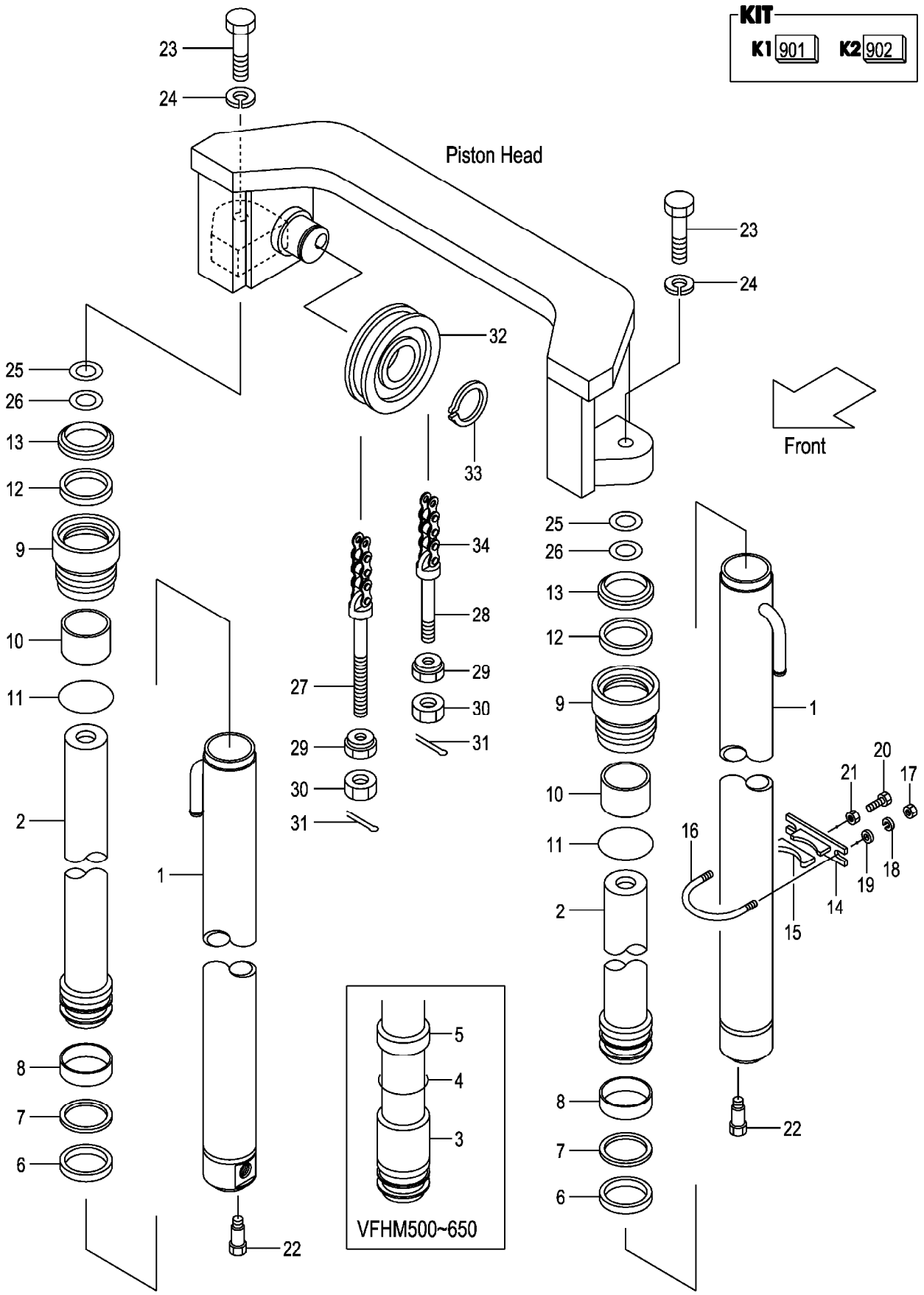

A:VFHM2N5(2T)
B:VFHM2N5(2.5T)

| Item No | Part No. | Mark | Description | Req'd | Remarks : Serial No. |
|---|---|---|---|---|---|
| - | 09001-10071 | | CHAIN,ROLLER VFHM550 ﾁｪｰﾝ | 2 | [FC][FCS35][FCS45][FCS55] |
| - | 09001-10077 | | CHAIN,ROLLER VFHM600 ﾁｪｰﾝ | 2 | [FC][FCS35][FCS45][FCS55] |
| - | 09001-10083 | | CHAIN,ROLLER VFHM650 ﾁｪｰﾝ | 2 | [FC][FCS35][FCS45][FCS55] |
| - | 09001-10089 | | CHAIN,ROLLER VFHM700 ﾁｪｰﾝ | 2 | [FC][FCS35][FCS45][FCS55] |
| - | 09001-10095 | | CHAIN,ROLLER VFHM750 ﾁｪｰﾝ | 2 | [FC][FCS35][FCS45][FCS55] |

# FIG.221 MAST PIPING [VFHM2N5]

(M7020830) マストパイピング

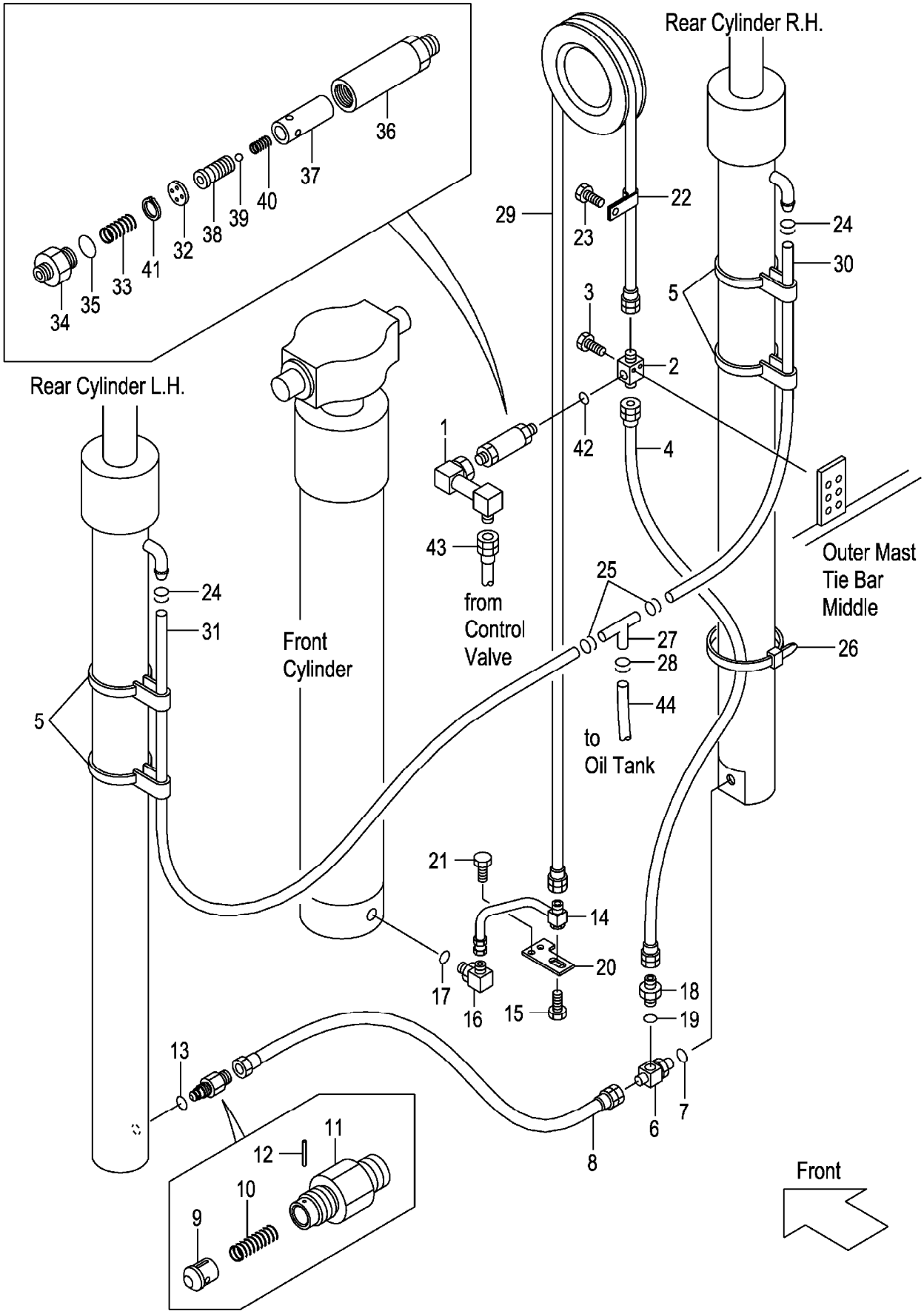

A:VFHM2N5(2T)
B:VFHM2N5(2.5T)

| Item No | Part No. | Mark | Description | | Req'd | Remarks : Serial No. |
|---|---|---|---|---|---|---|
| 1 | 22N90-90161 | | PIPE | ﾊﾟｲﾌﾟ | 1 | |
| 2 | 229F0-94101 | | THREE-WAY | ｽﾘｰｳｪｲ | 1 | |
| 3 | 01184-10040 | | BOLT | ﾎﾞﾙﾄ | 2 | |
| 4 | 216G0-93151 | | HOSE | ﾎｰｽ | 1 | |
| 5 | 22N58-45001 | | BAND | ﾊﾞﾝﾄﾞ | 4 | |
| A1 | 216G0-93101 | | THREE-WAY-ASSY | ｽﾘｰｳｪｲｱｯｾﾝ | 1 | INC.6,7 |
| 6 | NO PART NO. | # | THREE-WAY | ｽﾘｰｳｪｲ | 1 | |
| 7 | 03320-00140 | | O-RING | Oﾘﾝｸﾞ | 1 | |
| 8 | 22N50-92101 | | HOSE | ﾎｰｽ | 1 | |
| A2 | 234A8-40701 | | VALVE-ASSY,CUT | ｶｯﾄﾊﾞﾙﾌﾞｱｯｾﾝ | 1 | INC.9-13 |
| 9 | 234A8-42602 | | PISTON | ﾋﾟｽﾄﾝ | 1 | |
| 10 | 234A8-42611 | | SPRING | ｽﾌﾟﾘﾝｸﾞ | 1 | |
| 11 | 234A8-42622 | | NIPPLE | ﾆｯﾌﾟﾙ | 1 | |
| 12 | 02270-01014 | | PIN | ﾋﾟﾝ | 1 | |
| 13 | 03320-00140 | | O-RING | Oﾘﾝｸﾞ | 1 | |
| 14 | 22N90-90152 | | PIPE | ﾊﾟｲﾌﾟ | 1 | |
| 15 | 01186-10020 | | BOLT & WASHER | ﾎﾞﾙﾄ & ﾜｯｼｬ | 1 | |
| A3 | 04150-20404 | | ELBOW-ASSY | ｴﾙﾎﾞｱｯｾﾝ | 1 | INC.16,17 |
| 16 | NO PART NO. | # | ELBOW | ｴﾙﾎﾞ | 1 | |
| 17 | 03320-00180 | | O-RING | Oﾘﾝｸﾞ | 1 | |
| A4 | 04134-20404 | | NIPPLE-ASSY | ﾆｯﾌﾟﾙｱｯｾﾝ | 1 | INC.18,19 |
| 18 | NO PART NO. | # | NIPPLE | ﾆｯﾌﾟﾙ | 1 | |
| 19 | 03320-00180 | | O-RING | Oﾘﾝｸﾞ | 1 | |
| 20 | 22N50-73191 | | PLATE | ﾌﾟﾚｰﾄ | 1 | |
| 21 | 01185-08020 | | BOLT | ﾎﾞﾙﾄ | 2 | |
| 22 | 26602-42101 | | CLIP | ｸﾘｯﾌﾟ | 1 | |
| 23 | 01184-10012 | | BOLT | ﾎﾞﾙﾄ | 1 | |
| 24 | 24329-46201 | | CLIP | ｸﾘｯﾌﾟ | 2 | |
| 25 | 04911-00021 | | CLIP | ｸﾘｯﾌﾟ | 2 | |
| 26 | 25790-94021 | | BAND,HOSE | ﾊﾞﾝﾄﾞ | 1 | |
| 27 | 53675-55051 | | THREE-WAY | ｽﾘｰｳｪｲ | 1 | |
| 28 | 04911-00021 | | CLIP | ｸﾘｯﾌﾟ | 2 | |
| 29 | 04601-44230 | | HOSE VFHM360 | ﾎｰｽ | 1 | |
| - | 04601-44255 | | HOSE VFHM400 | ﾎｰｽ | 1 | |
| - | 04601-44279 | | HOSE VFHM435 | ﾎｰｽ | 1 | |
| - | 04601-44309 | | HOSE VFHM480 | ﾎｰｽ | 1 | |
| - | 04601-44328 | | HOSE VFHM500 | ﾎｰｽ | 1 | |
| - | 04601-44353 | | HOSE VFHM540 | ﾎｰｽ | 1 | |
| - | 04601-44361 | | HOSE VFHM550 | ﾎｰｽ | 1 | |
| - | 04601-44397 | | HOSE VFHM600 | ﾎｰｽ | 1 | |
| - | 04601-44439 | | HOSE VFHM650 | ﾎｰｽ | 1 | |
| - | 04601-44482 | | HOSE VFHM700 | ﾎｰｽ | 1 | |
| - | 04601-44515 | | HOSE VFHM750 | ﾎｰｽ | 1 | |
| 30 | 04710-04135 | | HOSE,RH VFHM360 | ﾎｰｽ | 1 | |
| - | 04710-04150 | | HOSE,RH VFHM400 | ﾎｰｽ | 1 | |
| - | 04710-04160 | | HOSE,RH VFHM435 | ﾎｰｽ | 1 | |
| - | 04710-04175 | | HOSE,RH VFHM480 | ﾎｰｽ | 1 | |
| - | 04710-04185 | | HOSE,RH VFHM500 | ﾎｰｽ | 1 | |
| - | 04710-04200 | | HOSE,RH VFHM540 | ﾎｰｽ | 1 | |
| - | 04710-04205 | | HOSE,RH VFHM550 | ﾎｰｽ | 1 | |

# FIG.221 MAST PIPING [VFHM2N5]

(M7020830) マストパイピング

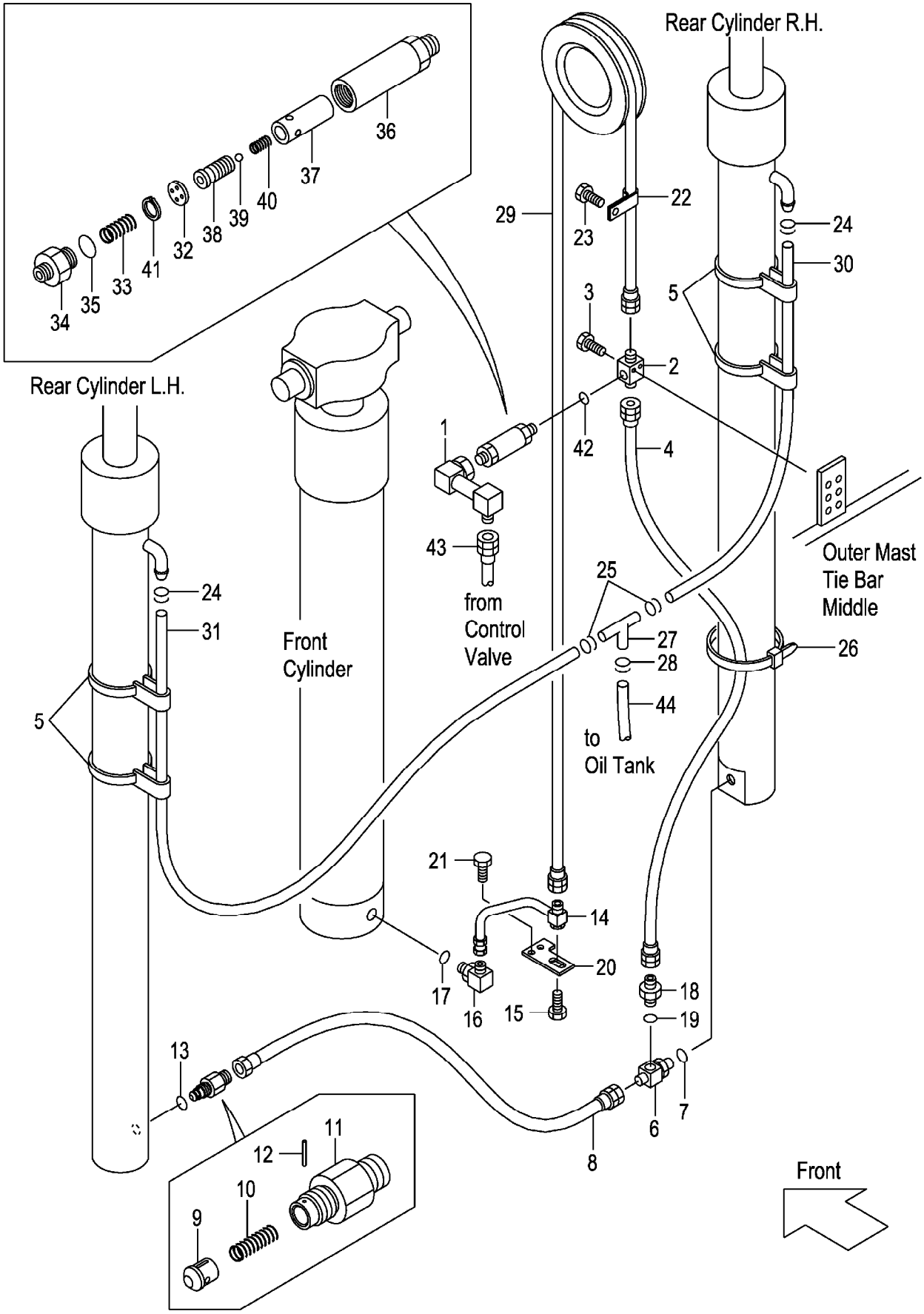

A:VFHM2N5(2T)
B:VFHM2N5(2.5T)

| Item No | Part No. | Mark | Description | | Req'd | Remarks : Serial No. |
|---|---|---|---|---|---|---|
| - | 04710-04220 | | HOSE,RH VFHM600 | ﾎｰｽ | 1 | |
| - | 04710-04245 | | HOSE,RH VFHM650 | ﾎｰｽ | 1 | |
| - | 04710-04265 | | HOSE,RH VFHM700 | ﾎｰｽ | 1 | |
| - | 04710-04280 | | HOSE,RH VFHM750 | ﾎｰｽ | 1 | |
| 31 | 04710-04140 | | HOSE,LH VFHM360 | ﾎｰｽ | 1 | |
| - | 04710-04155 | | HOSE,LH VFHM400 | ﾎｰｽ | 1 | |
| - | 04710-04165 | | HOSE,LH VFHM435 | ﾎｰｽ | 1 | |
| - | 04710-04180 | | HOSE,LH VFHM480 | ﾎｰｽ | 1 | |
| - | 04710-04190 | | HOSE,LH VFHM500 | ﾎｰｽ | 1 | |
| - | 04710-04205 | | HOSE,LH VFHM540 | ﾎｰｽ | 1 | |
| - | 04710-04210 | | HOSE,LH VFHM550 | ﾎｰｽ | 1 | |
| - | 04710-04225 | | HOSE,LH VFHM600 | ﾎｰｽ | 1 | |
| - | 04710-04250 | | HOSE,LH VFHM650 | ﾎｰｽ | 1 | |
| - | 04710-04270 | | HOSE,LH VFHM700 | ﾎｰｽ | 1 | |
| - | 04710-04285 | | HOSE,LH VFHM750 | ﾎｰｽ | 1 | |
| A5 | 234A8-41001 | | REGULATOR-ASSY,FLOW | ﾌﾛｰﾚｷﾞｭﾚｰﾀｱｯｾﾝ | 1 | INC.32-41 |
| 32 | NO PART NO. | # | PLATE | ﾌﾟﾚｰﾄ | 1 | |
| 33 | 27979-43101 | | SPRING | ｽﾌﾟﾘﾝｸﾞ | 1 | |
| 34 | NO PART NO. | # | NIPPLE | ﾆｯﾌﾟﾙ | 1 | |
| 35 | 03300-00280 | | O-RING | Oﾘﾝｸﾞ | 1 | |
| 36 | NO PART NO. | # | CASE | ｹｰｽ | 1 | |
| 37 | NO PART NO. | # | SLEEVE | ｽﾘｰﾌﾞ | 1 | |
| 38 | NO PART NO. | # | PISTON | ﾋﾟｽﾄﾝ | 1 | |
| 39 | 24459-42951 | | BALL,NYLON | ﾎﾞｰﾙ | 1 | |
| 40 | 214A8-44151 | | SPRING | ｽﾌﾟﾘﾝｸﾞ | 1 | |
| 41 | 02110-00018 | | RING,SNAP | ｽﾅｯﾌﾟﾘﾝｸﾞ | 1 | |
| 42 | 03320-00180 | | O-RING | Oﾘﾝｸﾞ | 1 | |
| 43 | 277P0-92131 | | HOSE | ﾎｰｽ | 1 | |
| 44 | 04710-04150 | | HOSE | ﾎｰｽ | 1 | |

# M E M O

# M E M O

# FIG.222 FORK [VFHM2N4]

(M7028170) フォーク

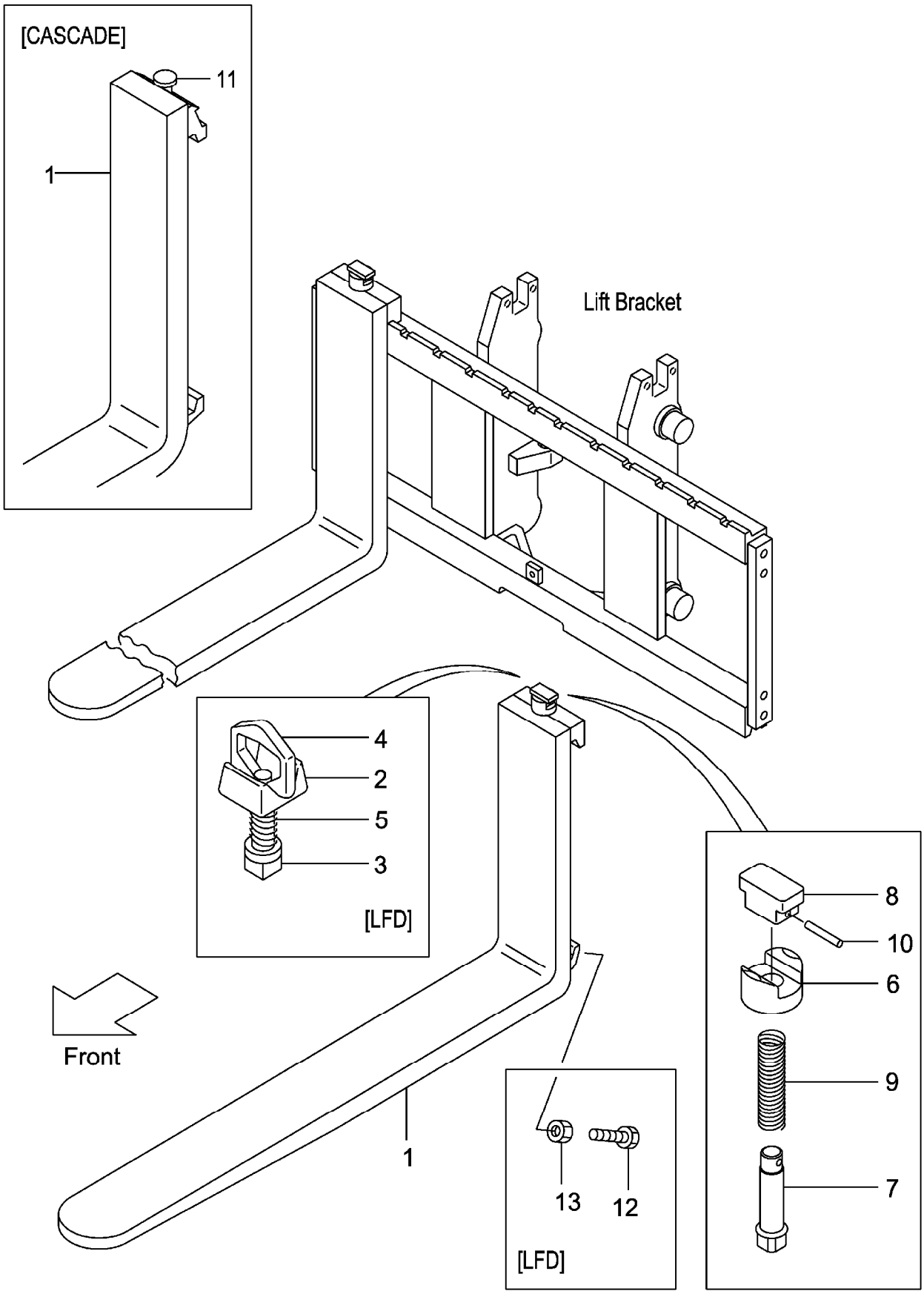

A:VFHM2N4(2T)
B:VFHM2N4(2.5T)

| Item No | Part No. | Mark | Description | | Req'd | Remarks : Serial No. |
|---|---|---|---|---|---|---|
| 1 | 231A8-10101 | | FORK | ﾌｫｰｸ | 2 | A |
| | | | | | | (L=920) INC.6-10 |
| - | 214A8-10512 | | FORK | ﾌｫｰｸ | 2 | B |
| | | | | | | (L=1070) INC.6-10 |
| - | 214A8-10512 | | FORK | ﾌｫｰｸ | 2 | [EX] INC.6-10 |
| - | 231A8-10171 | | FORK | ﾌｫｰｸ | 2 | A |
| | | | | | | [LF090] INC.6-10 |
| - | 231F8-10571 | | FORK | ﾌｫｰｸ | 2 | B |
| | | | | | | [LF090] INC.6-10 |
| - | 231A8-10101 | | FORK | ﾌｫｰｸ | 2 | A |
| | | | | | | [LF092] INC.6-10 |
| - | 231F8-10501 | | FORK | ﾌｫｰｸ | 2 | B |
| | | | | | | [LF092] INC.6-10 |
| - | 214A8-10582 | | FORK | ﾌｫｰｸ | 2 | [LF100] INC.6-10 |
| - | 214A8-10512 | | FORK | ﾌｫｰｸ | 2 | [LF107] INC.6-10 |
| - | 214A8-10592 | | FORK | ﾌｫｰｸ | 2 | [LF110] INC.6-10 |
| - | 214A8-10602 | | FORK | ﾌｫｰｸ | 2 | [LF120] INC.6-10 |
| - | 214A8-10522 | | FORK | ﾌｫｰｸ | 2 | [LF122] INC.6-10 |
| - | 214A8-10612 | | FORK | ﾌｫｰｸ | 2 | [LF130] INC.6-10 |
| - | 214A8-10532 | | FORK | ﾌｫｰｸ | 2 | [LF137] INC.6-10 |
| - | 214A8-10622 | | FORK | ﾌｫｰｸ | 2 | [LF140] INC.6-10 |
| - | 214A8-10632 | | FORK | ﾌｫｰｸ | 2 | [LF150] INC.6-10 |
| - | 214A8-10542 | | FORK | ﾌｫｰｸ | 2 | [LF152] INC.6-10 |
| - | 214A8-10642 | | FORK | ﾌｫｰｸ | 2 | [LF160] INC.6-10 |
| - | 214A8-10552 | | FORK | ﾌｫｰｸ | 2 | [LF167] INC.6-10 |
| - | 214A8-10653 | | FORK | ﾌｫｰｸ | 2 | [LF170] INC.6-10 |
| - | 214A8-10663 | | FORK | ﾌｫｰｸ | 2 | [LF180] INC.6-10 |
| - | 214A8-10563 | | FORK | ﾌｫｰｸ | 2 | [LF182] INC.6-10 |
| - | 214A8-10673 | | FORK | ﾌｫｰｸ | 2 | [LF190] INC.6-10 |
| - | 214A8-10683 | | FORK | ﾌｫｰｸ | 2 | [LF200] INC.6-10 |
| - | 234A8-10571 | | FORK | ﾌｫｰｸ | 2 | [LFD090] INC.2-5 |
| - | 234A8-10501 | | FORK | ﾌｫｰｸ | 2 | [LFD092] INC.2-5 |
| - | 234A8-10581 | | FORK | ﾌｫｰｸ | 2 | [LFD100] INC.2-5 |
| - | 234A8-10511 | | FORK | ﾌｫｰｸ | 2 | [LFD107] INC.2-5 |
| - | 234A8-10591 | | FORK | ﾌｫｰｸ | 2 | [LFD110] INC.2-5 |
| - | 234A8-10601 | | FORK | ﾌｫｰｸ | 2 | [LFD120] INC.2-5 |
| - | 234A8-10521 | | FORK | ﾌｫｰｸ | 2 | [LFD122] INC.2-5 |
| - | 234A8-10611 | | FORK | ﾌｫｰｸ | 2 | [LFD130] INC.2-5 |
| - | 234A8-10531 | | FORK | ﾌｫｰｸ | 2 | [LFD137] INC.2-5 |
| - | 234A8-10621 | | FORK | ﾌｫｰｸ | 2 | [LFD140] INC.2-5 |
| - | 234A8-10631 | | FORK | ﾌｫｰｸ | 2 | [LFD150] INC.2-5 |
| - | 234A8-10541 | | FORK | ﾌｫｰｸ | 2 | [LFD152] INC.2-5 |
| - | 234A8-10641 | | FORK | ﾌｫｰｸ | 2 | [LFD160] INC.2-5 |
| - | 234A8-10551 | | FORK | ﾌｫｰｸ | 2 | [LFD167] INC.2-5 |
| - | 234A8-10652 | | FORK | ﾌｫｰｸ | 2 | [LFD170] INC.2-5 |
| - | 234A8-10662 | | FORK | ﾌｫｰｸ | 2 | [LFD180] INC.2-5 |
| - | 234A8-10562 | | FORK | ﾌｫｰｸ | 2 | [LFD182] INC.2-5 |
| - | 234A8-10672 | | FORK | ﾌｫｰｸ | 2 | [LFD190] INC.2-5 |
| - | 234A8-10682 | | FORK | ﾌｫｰｸ | 2 | [LFD200] INC.2-5 |
| - | 22N58-10501 | | FORK | ﾌｫｰｸ | 2 | [LF092/CASCADE] INC.11 |

# FIG.222 FORK [VFHM2N4]

(M7028170) フォーク

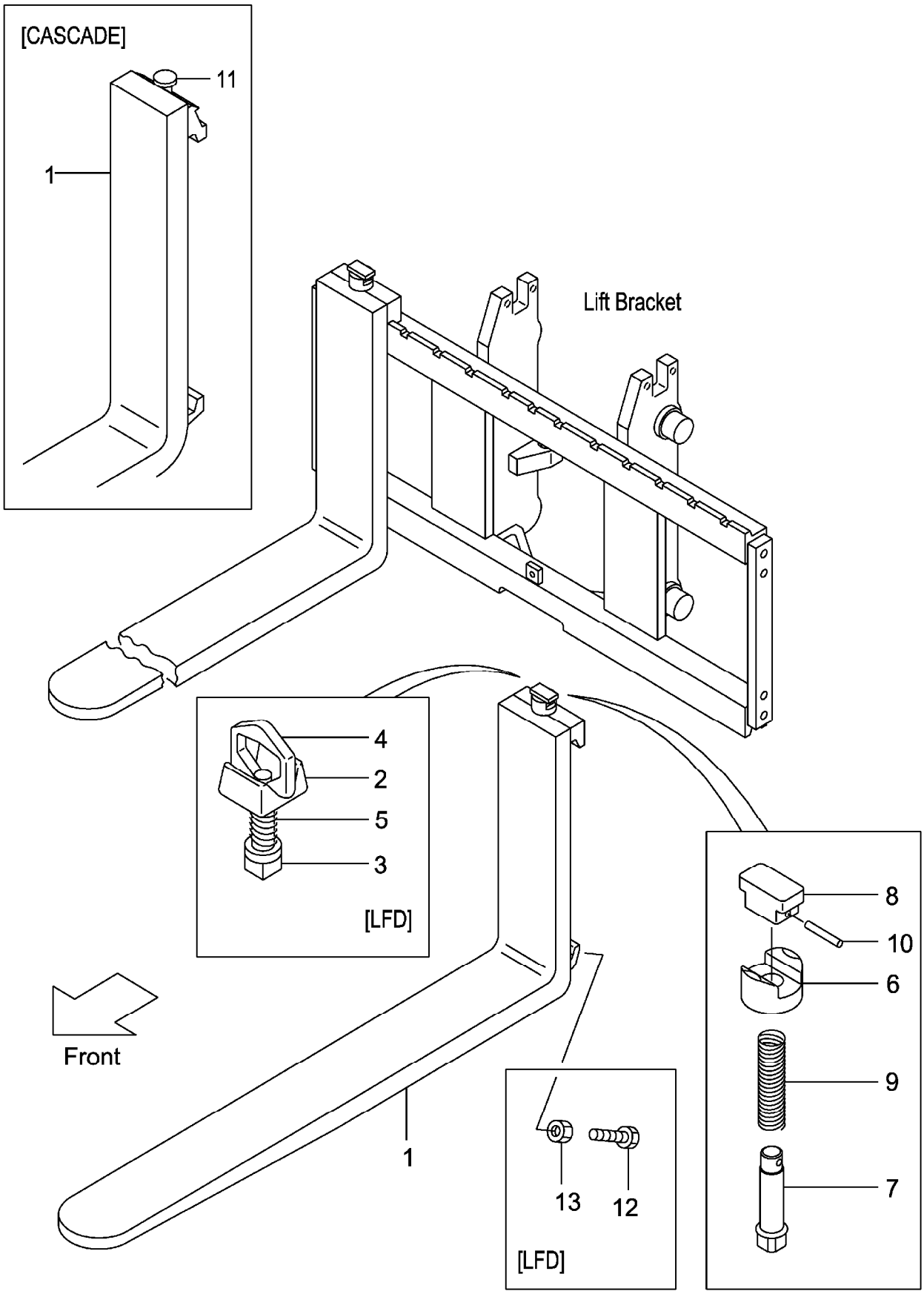

A:VFHM2N4(2T)
B:VFHM2N4(2.5T)

| Item No | Part No. | Mark | Description | | Req'd | Remarks : Serial No. |
|---|---|---|---|---|---|---|
| - | 22N58-10511 | | FORK | ﾌｫｰｸ | 2 | [LF107/CASCADE] INC.11 |
| - | 22N58-10521 | | FORK | ﾌｫｰｸ | 2 | [LF122/CASCADE] INC.11 |
| A1 | 214A8-11001 | | STOPPER-ASSY,FORK | ﾌｫｰｸｽﾄｯﾊﾟｱｯｾﾝ | 2 | [LFD] INC.2-5 |
| 2 | 214A8-12001 | | HEAD | ﾍｯﾄﾞ | 2 | [LFD] |
| 3 | 214A8-12011 | | STOPPER | ｽﾄｯﾊﾟ | 2 | [LFD] |
| 4 | 214A8-12021 | | HANDLE | ﾊﾝﾄﾞﾙ | 2 | [LFD] |
| 5 | 214A8-12031 | | SPRING | ｽﾌﾟﾘﾝｸﾞ | 2 | [LFD] |
| 6 | 216G8-12921 | | HOLDER | ﾎﾙﾀﾞ | 2 | [LF] |
| 7 | 231A8-12001 | | PIN | ﾋﾟﾝ | 2 | [LF] |
| 8 | 231A8-12011 | | KNOB | ﾉﾌﾞ | 2 | [LF] |
| 9 | 231A8-12021 | | SPRING | ｽﾌﾟﾘﾝｸﾞ | 2 | [LF] |
| 10 | 231A8-12031 | | PIN,SPRING | ﾋﾟﾝ | 2 | [LF] |
| 11 | W-K2PK-M | | KIT,PIN,STOPPER | ｽｯﾄﾊﾟﾋﾟﾝｷｯﾄ | 2 | [CASCADE] |
| 12 | 216G8-12101 | | BOLT | ﾎﾞﾙﾄ | 4 | [LFD] |
| 13 | 01402-00010 | | NUT | ﾅｯﾄ | 4 | [LFD] |

# M E M O

# M E M O

# FIG.223 LIFT BRACKET [VFHM2N4]

(M7020920) ﾘﾌﾄﾌﾞﾗｹｯﾄ

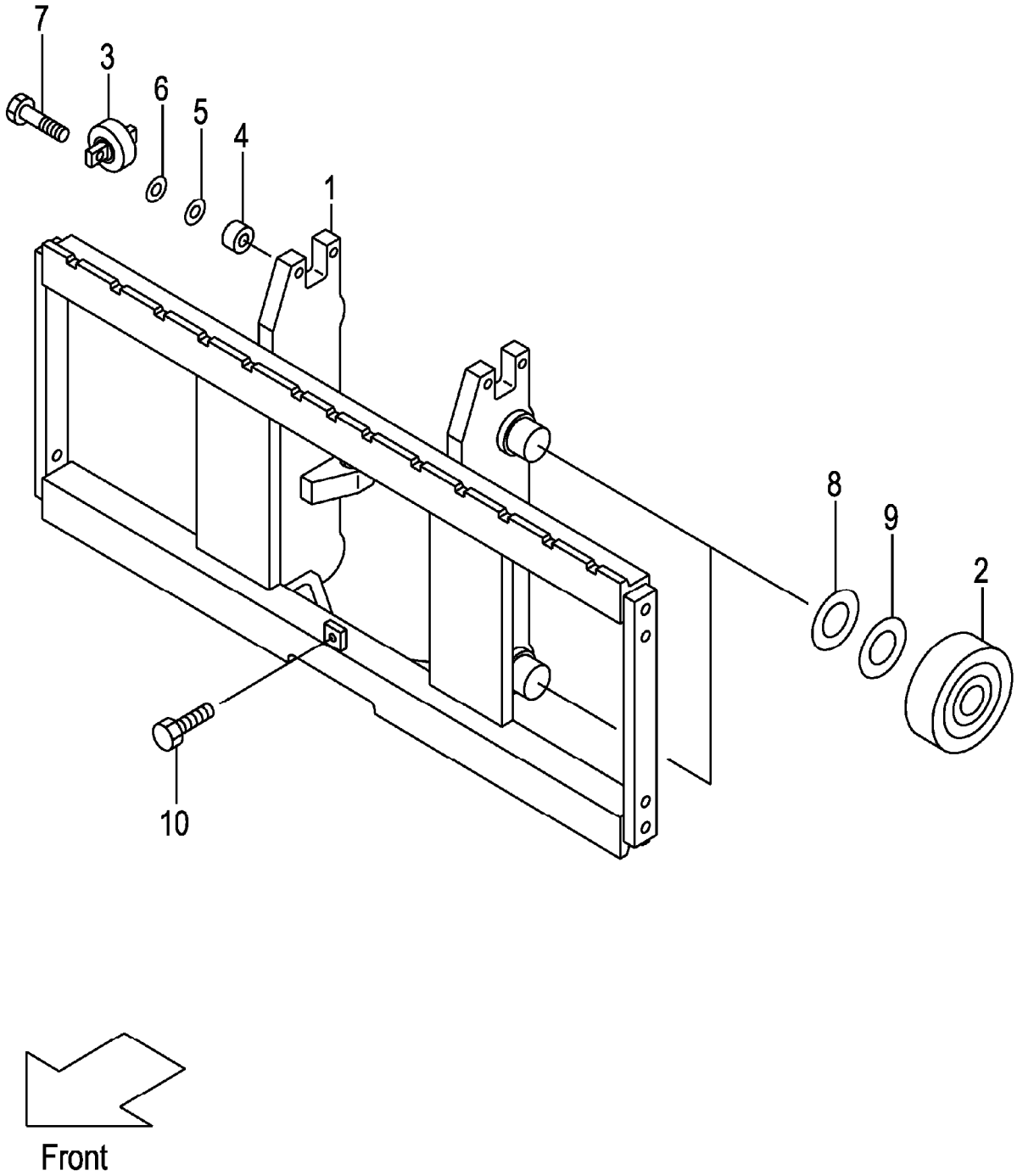

A:VFHM2N4(2T)
B:VFHM2N4(2.5T)

| Item No | Part No. | Mark | Description | | Req'd | Remarks : Serial No. |
|---|---|---|---|---|---|---|
| 1 | 22N40-90201 | | BRACKET,LIFT | ﾌﾞﾗｹｯﾄ | 1 | |
| 2 | 277P8-22051 | | ROLLER,END,119.0 | ﾛｰﾗ | 4 | |
| - | 277P8-22061 | | ROLLER,END,119.5 | ﾛｰﾗ | (4) | |
| 3 | 22N58-32701 | | ROLLER,SIDE | ﾛｰﾗ | 2 | |
| 4 | 22N58-32711 | | SPACER | ｽﾍﾟｰｻ | 4 | |
| 5 | 22018-30261 | | SHIM | ｼﾑ | 4 | |
| 6 | 22018-30121 | | SHIM | ｼﾑ | 4 | |
| 7 | 01103-10045 | | BOLT | ﾎﾞﾙﾄ | 4 | |
| 8 | 277P8-22071 | | SHIM,T-0.5 | ｼﾑ | 5 | |
| 9 | 277P8-22081 | | SHIM,T-1.0 | ｼﾑ | 5 | |
| 10 | 01184-12025 | | BOLT & WASHER | ﾎﾞﾙﾄ & ﾜｯｼｬ | 1 | |

## FIG.224 BACKREST [VFHM2N4]

(M7028280) ﾊﾞｯｸﾚｽﾄ

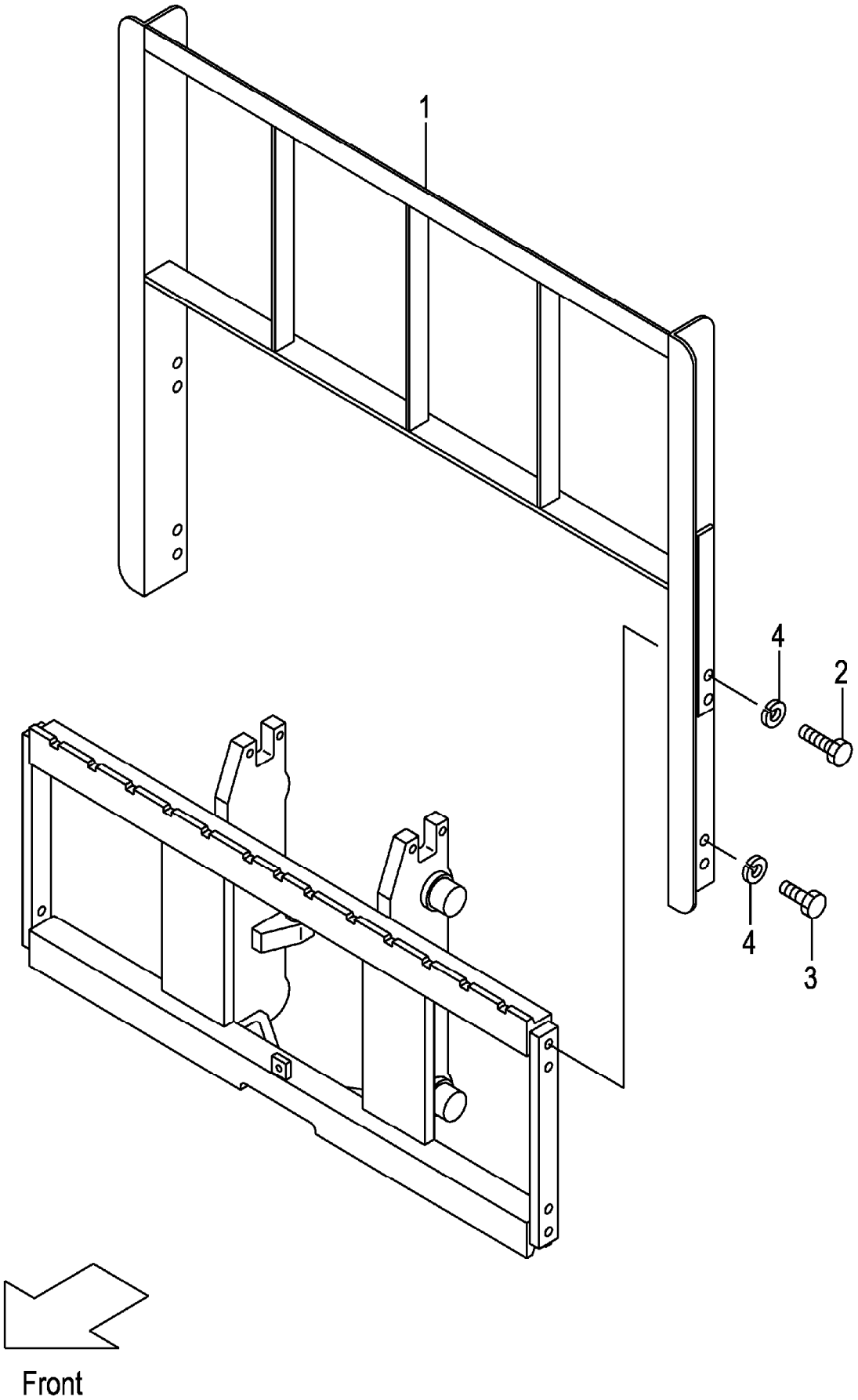

A:VFHM2N4(2T)
B:VFHM2N4(2.5T)

| Item No | Part No. | Mark | Description | | Req'd | Remarks : Serial No. |
|---|---|---|---|---|---|---|
| 1 | 234A8-22202 | | BACKREST | ﾊﾞｯｸﾚｽﾄ | 1 | |
| 2 | 01100-14030 | | BOLT | ﾎﾞﾙﾄ | 4 | |
| 3 | 01100-14025 | | BOLT | ﾎﾞﾙﾄ | 4 | |
| 4 | 02010-00014 | | WASHER | ﾜｯｼｬ | 8 | |

# FIG.225 MAST [VFHM2N4]

(M7020730) マスト

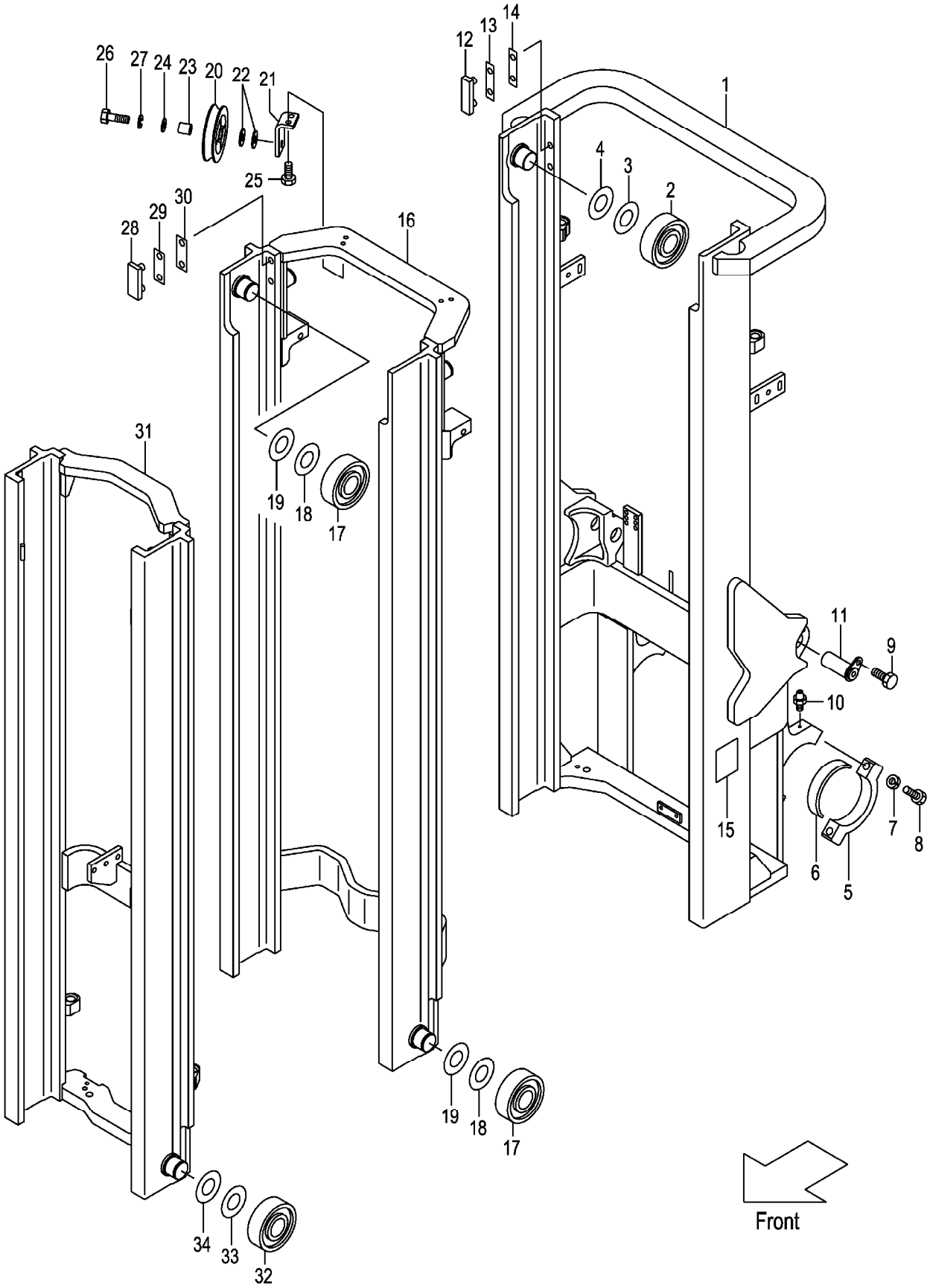

A:VFHM2N4(2T)
B:VFHM2N4(2.5T)

| Item No | Part No. | Mark | Description | | Req'd | Remarks : Serial No. |
|---|---|---|---|---|---|---|
| 1 | 22N40-70201 | | MAST,OUTER VFHM435 | ｱｳﾀﾏｽﾄ | 1 | |
| - | 22N40-70231 | | MAST,OUTER VFHM480 | ｱｳﾀﾏｽﾄ | 1 | |
| - | 22N40-70241 | | MAST,OUTER VFHM500 | ｱｳﾀﾏｽﾄ | 1 | |
| - | 22N40-70251 | | MAST,OUTER VFHM540 | ｱｳﾀﾏｽﾄ | 1 | |
| - | 22N40-70261 | | MAST,OUTER VFHM550 | ｱｳﾀﾏｽﾄ | 1 | |
| - | 52N53-91901 | | MAST,OUTER VFHM435 | ｱｳﾀﾏｽﾄ | 1 | [EXR][RW][HC] |
| - | 52N53-91931 | | MAST,OUTER VFHM480 | ｱｳﾀﾏｽﾄ | 1 | [EXR][RW][HC] |
| - | 52N53-91941 | | MAST,OUTER VFHM500 | ｱｳﾀﾏｽﾄ | 1 | [EXR][RW][HC] |
| - | 52N53-91951 | | MAST,OUTER VFHM540 | ｱｳﾀﾏｽﾄ | 1 | [EXR][RW][HC] |
| - | 52N53-91961 | | MAST,OUTER VFHM550 | ｱｳﾀﾏｽﾄ | 1 | [EXR][RW][HC] |
| 2 | 277P8-22051 | | ROLLER,END,119.0 | ﾛｰﾗ | 2 | |
| 3 | 277P8-22071 | | SHIM,T-0.5 | ｼﾑ | 12 | |
| 4 | 277P8-22081 | | SHIM,T-1.0 | ｼﾑ | 12 | |
| 5 | 277P8-32701 | | CAP | ｷｬｯﾌﾟ | 2 | |
| 6 | 214A8-02201 | | BUSHING | ﾌﾞｯｼﾝｸﾞ | 2 | |
| 7 | 01103-16065 | | BOLT | ﾎﾞﾙﾄ | 4 | |
| 8 | 02011-00016 | | WASHER | ﾜｯｼｬ | 4 | |
| 9 | 216G8-52301 | | BOLT & WASHER | ﾎﾞﾙﾄ & ﾜｯｼｬ | 2 | |
| 10 | 04901-00100 | | FITTING | ﾌｨｯﾃｨﾝｸﾞ | 2 | |
| 11 | 272K8-52201 | | PIN | ﾋﾟﾝ | 2 | |
| 12 | 216G8-33401 | | SLIPPER | ｽﾘｯﾊﾟ | 2 | |
| 13 | 216G8-33361 | | SHIM,T-0.5 | ｼﾑ | 8 | |
| 14 | 216G8-33371 | | SHIM,T-1.0 | ｼﾑ | 4 | |
| 15 | 23678-06002 | | PLATE,NAME | ﾌﾟﾚｰﾄ | 1 | |
| 16 | 22N40-70401 | | MAST,MIDDLE VFHM435 | ﾐﾄﾞﾙﾏｽﾄ | 1 | |
| - | 22N40-70431 | | MAST,MIDDLE VFHM480 | ﾐﾄﾞﾙﾏｽﾄ | 1 | |
| - | 22N40-70441 | | MAST,MIDDLE VFHM500 | ﾐﾄﾞﾙﾏｽﾄ | 1 | |
| - | 22N40-70451 | | MAST,MIDDLE VFHM540 | ﾐﾄﾞﾙﾏｽﾄ | 1 | |
| - | 22N40-70461 | | MAST,MIDDLE VFHM550 | ﾐﾄﾞﾙﾏｽﾄ | 1 | |
| 17 | 277P8-22051 | | ROLLER,END,119.0 | ﾛｰﾗ | 4 | |
| - | 277P8-22061 | | ROLLER,END,119.5 | ﾛｰﾗ | (2) | |
| 18 | 277P8-22071 | | SHIM,T-0.5 | ｼﾑ | 15 | |
| 19 | 277P8-22081 | | SHIM,T-1.0 | ｼﾑ | 15 | |
| 20 | 63130-15301 | | PULLEY | ﾌﾟｰﾘ | 1 | |
| 21 | 22N40-72191 | | BRACKET | ﾌﾞﾗｹｯﾄ | 1 | |
| 22 | 62050-12331 | | SPACER | ｽﾍﾟｰｻ | 2 | |
| 23 | 214A0-72701 | | COLLAR | ｶﾗｰ | 1 | |
| 24 | 02000-00016 | | WASHER | ﾜｯｼｬ | 1 | |
| 25 | 01184-10025 | | BOLT | ﾎﾞﾙﾄ | 2 | |
| 26 | 01100-16050 | | BOLT | ﾎﾞﾙﾄ | 1 | |
| 27 | 02010-00016 | | WASHER | ﾜｯｼｬ | 1 | |
| 28 | 216G8-33351 | | SLIPPER | ｽﾘｯﾊﾟ | 2 | |
| 29 | 216G8-33361 | | SHIM,T-0.5 | ｼﾑ | 4 | |
| 30 | 216G8-33371 | | SHIM,T-1.0 | ｼﾑ | 8 | |
| 31 | 22N40-70601 | | MAST,INNER VFHM435 | ｲﾝﾅﾏｽﾄ | 1 | |
| - | 22N40-70631 | | MAST,INNER VFHM480 | ｲﾝﾅﾏｽﾄ | 1 | |
| - | 22N40-70641 | | MAST,INNER VFHM500 | ｲﾝﾅﾏｽﾄ | 1 | |
| - | 22N40-70651 | | MAST,INNER VFHM540 | ｲﾝﾅﾏｽﾄ | 1 | |
| - | 22N40-70661 | | MAST,INNER VFHM550 | ｲﾝﾅﾏｽﾄ | 1 | |
| 32 | 277P8-22051 | | ROLLER,END,119.0 | ﾛｰﾗ | 2 | |

# FIG.225 MAST [VFHM2N4]

(M7020730) マスト

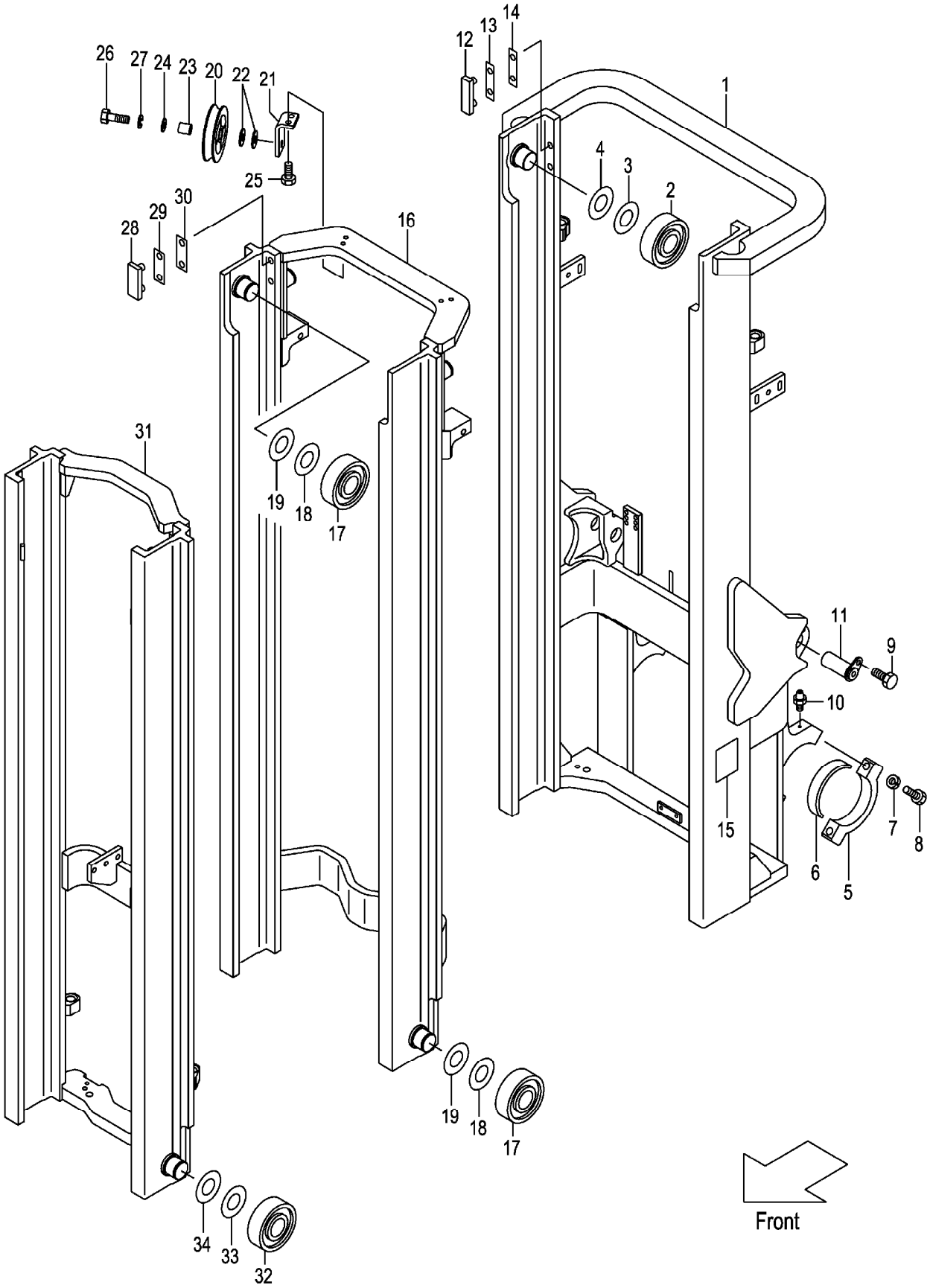

A:VFHM2N4(2T)
B:VFHM2N4(2.5T)

| Item No | Part No. | Mark | Description | Req'd | Remarks : Serial No. |
|---|---|---|---|---|---|
| - | 277P8-22061 | | ROLLER,END,119.5 ローラ | (2) | |
| 33 | 277P8-22071 | | SHIM,T-0.5 シム | 12 | |
| 34 | 277P8-22081 | | SHIM,T-1.0 シム | 12 | |

# M E M O

# M E M O

# FIG.226 LIFT CYLINDER (FRONT) [VFHM2N4]

(M7020840) リフトシリンダ(フロント)

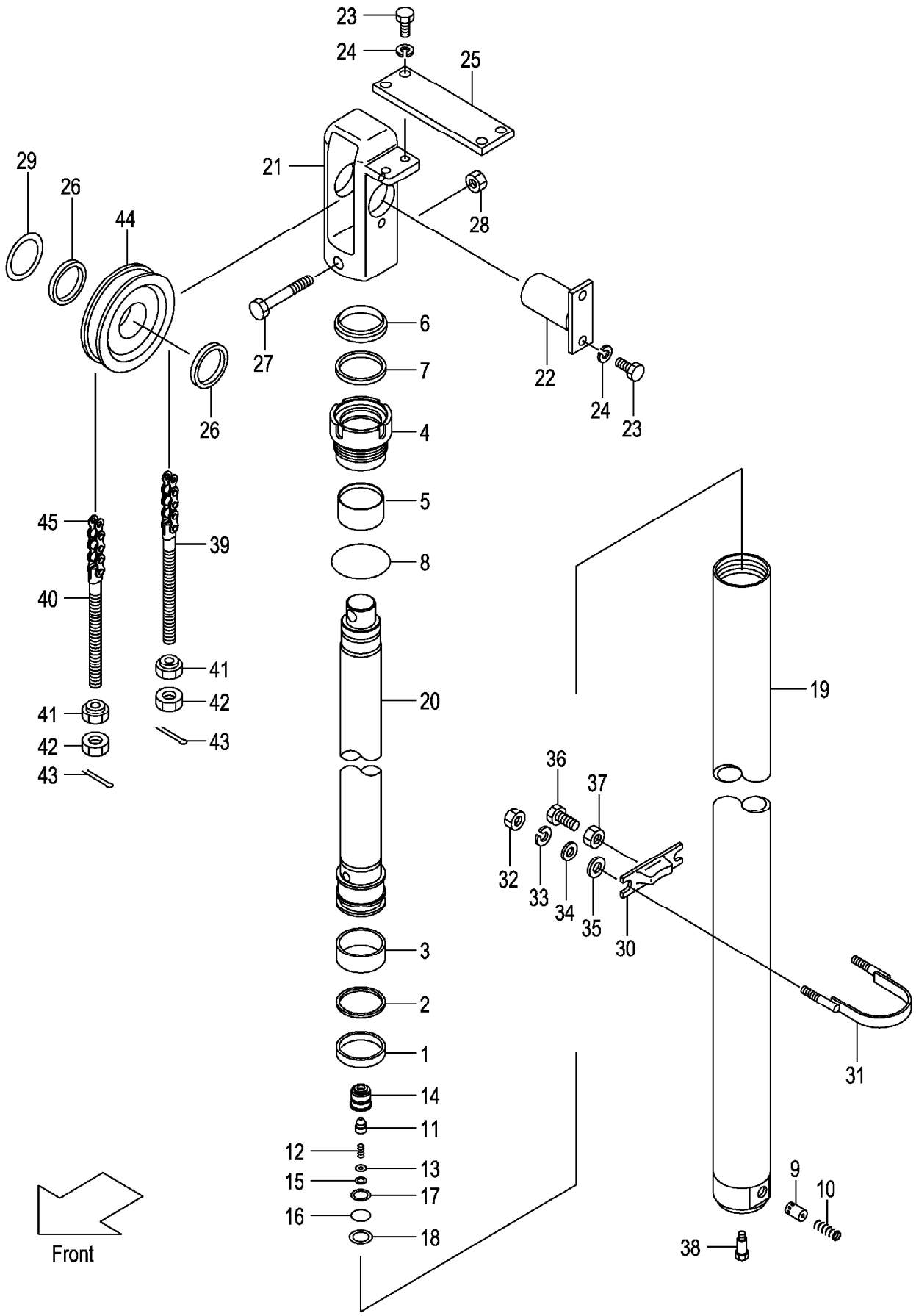

A:VFHM2N4(2T)
B:VFHM2N4(2.5T)

| Item No | Part No. | Mark | Description | | Req'd | Remarks : Serial No. |
|---|---|---|---|---|---|---|
| A1 | 22N40-50201 | | CYL-ASSY,LIFT VFHM435 | ﾘﾌﾄｼﾘﾝﾀﾞｱｯｾﾝ | 2 | INC.1-20 |
| - | 22N40-50221 | | CYL-ASSY,LIFT VFHM480 | ﾘﾌﾄｼﾘﾝﾀﾞｱｯｾﾝ | 2 | INC.1-20 |
| - | 22N40-50231 | | CYL-ASSY,LIFT VFHM500 | ﾘﾌﾄｼﾘﾝﾀﾞｱｯｾﾝ | 2 | INC.1-20 |
| - | 22N40-50261 | | CYL-ASSY,LIFT VFHM540 | ﾘﾌﾄｼﾘﾝﾀﾞｱｯｾﾝ | 2 | INC.1-20 |
| - | 22N40-80261 | | CYL-ASSY,LIFT VFHM550 | ﾘﾌﾄｼﾘﾝﾀﾞｱｯｾﾝ | 2 | INC.1-20 |
| 1 | 27978-42411 | | PACKING | ﾊﾟｯｷﾝｸﾞ | 2 | |
| 2 | 24459-42291 | | RING,BACK-UP | ﾘﾝｸﾞ | 2 | |
| 3 | 27978-42421 | | WEARING | ｳｪｱﾘﾝｸﾞ | 2 | |
| 4 | 232L8-42601 | | CAP,CYL | ｷｬｯﾌﾟ | 2 | |
| 5 | 232L8-42621 | | BUSHING | ﾌﾞｯｼﾝｸﾞ | 2 | |
| 6 | 214J8-46001 | | SEAL,DUST | ｼｰﾙ | 2 | |
| 7 | 214J8-42721 | | PACKING | ﾊﾟｯｷﾝｸﾞ | 2 | |
| 8 | 232L8-42631 | | O-RING | Oﾘﾝｸﾞ | 2 | |
| 9 | 24320-55001 | | PISTON | ﾋﾟｽﾄﾝ | 2 | |
| 10 | 27978-42601 | | SPRING | ｽﾌﾟﾘﾝｸﾞ | 2 | |
| A2 | 214T0-83501 | | VALVE-ASSY,CHECK | ﾁｪｯｸﾊﾞﾙﾌﾞｱｯｾﾝ | 2 | INC.11-15 |
| 11 | 214T0-83521 | | POPPET | ﾎﾟﾍﾟｯﾄ | 2 | |
| 12 | 214T0-83541 | | SPRING | ｽﾌﾟﾘﾝｸﾞ | 2 | |
| 13 | 214T0-83531 | | PLATE | ﾌﾟﾚｰﾄ | 2 | |
| 14 | 214T0-83511 | | CASE | ｹｰｽ | 2 | |
| 15 | 02110-00014 | | RING,SNAP | ｽﾅｯﾌﾟﾘﾝｸﾞ | 2 | |
| 16 | 03320-00210 | | O-RING | Oﾘﾝｸﾞ | 2 | |
| 17 | 03360-00210 | | RING,BACK-UP | ﾘﾝｸﾞ | 2 | |
| 18 | 02110-00028 | | RING,SNAP | ｽﾅｯﾌﾟﾘﾝｸﾞ | 2 | |
| 19 | 22N40-50601 | | BODY,CYL VFHM435 | ﾎﾞﾃﾞｨ | 2 | |
| - | 22N40-50621 | | BODY,CYL VFHM480 | ﾎﾞﾃﾞｨ | 2 | |
| - | 22N40-50631 | | BODY,CYL VFHM500 | ﾎﾞﾃﾞｨ | 2 | |
| - | 22N40-50661 | | BODY,CYL VFHM540 | ﾎﾞﾃﾞｨ | 2 | |
| - | 22N40-80661 | | BODY,CYL VFHM550 | ﾎﾞﾃﾞｨ | 2 | |
| 20 | 22N40-50401 | | ROD,PISTON VFHM360 | ﾛｯﾄﾞ | 2 | |
| - | 22N40-50421 | | ROD,PISTON VFHM400 | ﾛｯﾄﾞ | 2 | |
| - | 22N40-50431 | | ROD,PISTON VFHM435 | ﾛｯﾄﾞ | 2 | |
| - | 22N40-50461 | | ROD,PISTON VFHM480 | ﾛｯﾄﾞ | 2 | |
| - | 22N40-80461 | | ROD,PISTON VFHM500 | ﾛｯﾄﾞ | 2 | |
| 21 | 22N40-74301 | | HEAD,PISTON | ﾍｯﾄﾞ | 2 | |
| 22 | 22N40-74501 | | PIN,ANCHOR | ﾋﾟﾝ | 2 | |
| 23 | 01103-10020 | | BOLT | ﾎﾞﾙﾄ | 8 | |
| 24 | 02011-00010 | | WASHER | ﾜｯｼｬ | 8 | |
| 25 | 22N40-74311 | | PLATE | ﾌﾟﾚｰﾄ | 1 | |
| 26 | 229G0-52251 | | SPACER | ｽﾍﾟｰｻ | 4 | |
| 27 | 01100-12080 | | BOLT | ﾎﾞﾙﾄ | 2 | |
| 28 | 01402-00012 | | NUT | ﾅｯﾄ | 2 | |
| 29 | 224T8-52291 | | SHIM | ｼﾑ | 1 | |
| 30 | 22N58-43011 | | SUPPORT,CYL | ｻﾎﾟｰﾄ | 2 | |
| 31 | 22N40-72311 | | U-BOLT | Uﾎﾞﾙﾄ | 2 | |
| 32 | 278R0-63151 | | NUT | ﾅｯﾄ | 4 | |
| 33 | 02010-00008 | | WASHER | ﾜｯｼｬ | 4 | |
| 34 | 02000-00008 | | WASHER | ﾜｯｼｬ | 4 | |
| 35 | 02000-00010 | | WASHER | ﾜｯｼｬ | 4 | |
| 36 | 232A8-42201 | | BOLT | ﾎﾞﾙﾄ | 2 | |

# FIG.226 LIFT CYLINDER (FRONT) [VFHM2N4]

(M7020840) リフトシリンダ(フロント)

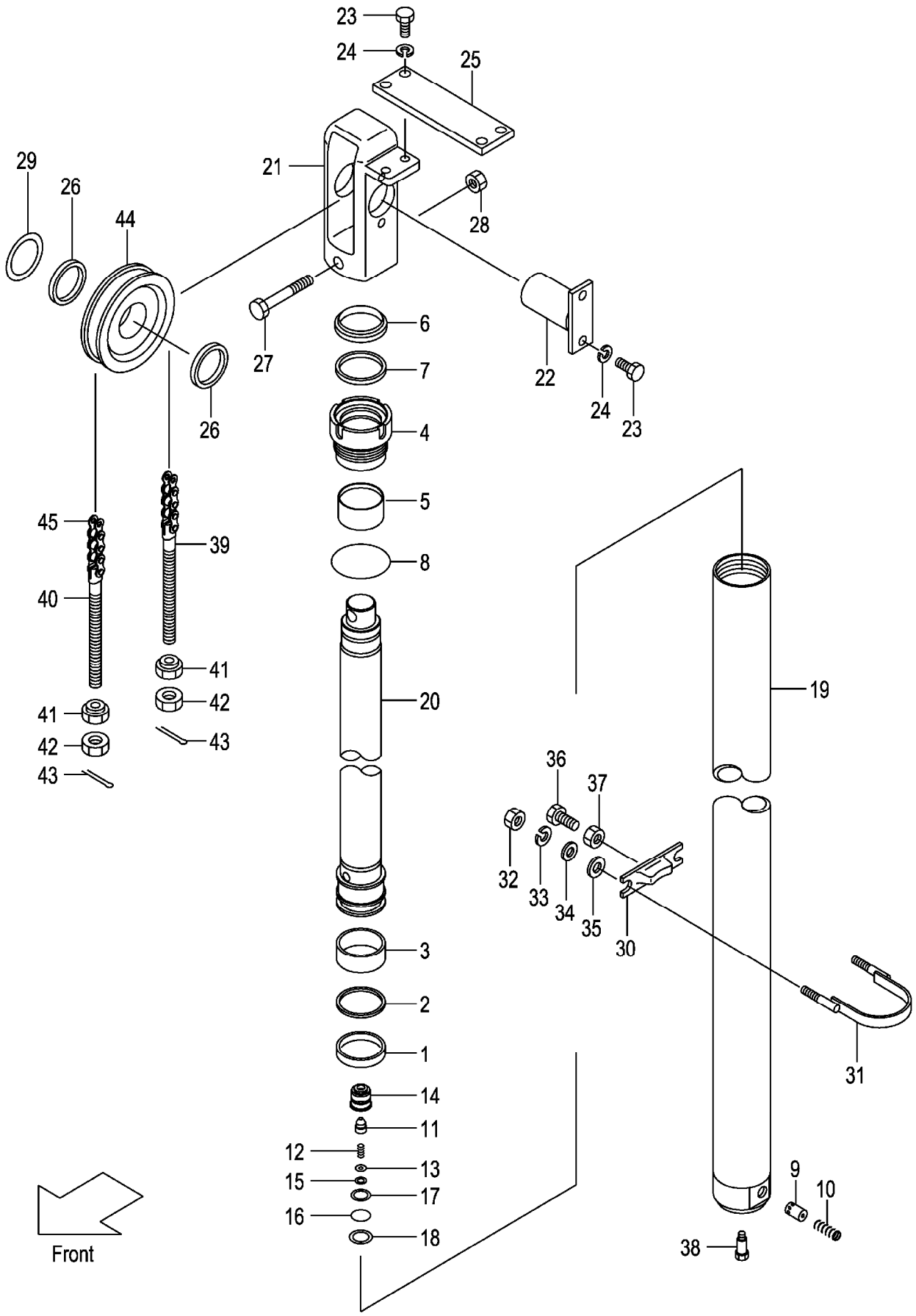

A:VFHM2N4(2T)
B:VFHM2N4(2.5T)

| Item No | Part No. | Mark | Description | | Req'd | Remarks : Serial No. |
|---|---|---|---|---|---|---|
| 37 | 234A8-42571 | | NUT | ﾅｯﾄ | 2 | |
| 38 | 214A8-42661 | | BOLT | ﾎﾞﾙﾄ | 2 | |
| 39 | 52672-72231 | | PIN,ANCHOR | ﾋﾟﾝ | 2 | |
| 40 | 23679-45801 | | PIN,ANCHOR | ﾋﾟﾝ | 2 | |
| 41 | 22218-40191 | | NUT | ﾅｯﾄ | 4 | |
| 42 | 01400-00018 | | NUT | ﾅｯﾄ | 4 | |
| 43 | 02200-03030 | | PIN | ﾋﾟﾝ | 4 | |
| 44 | 234A8-43501 | | SHEAVE | ｼｰﾌﾞ | 2 | |
| 45 | 22679-45731 | | CHAIN,LEAF VFHM435 | ﾁｪｰﾝ | 2 | |
| - | 22679-45811 | | CHAIN,LEAF VFHM480 | ﾁｪｰﾝ | 2 | |
| - | 22679-45851 | | CHAIN,LEAF VFHM500 | ﾁｪｰﾝ | 2 | |
| - | 22679-45931 | | CHAIN,LEAF VFHM540 | ﾁｪｰﾝ | 2 | |
| - | 22679-45951 | | CHAIN,LEAF VFHM550 | ﾁｪｰﾝ | 2 | |

# M E M O

# M E M O

# FIG.227 LIFT CYLINDER (REAR) [VFHM2N4]

(M7020850) リフトシリンダ(リヤー)

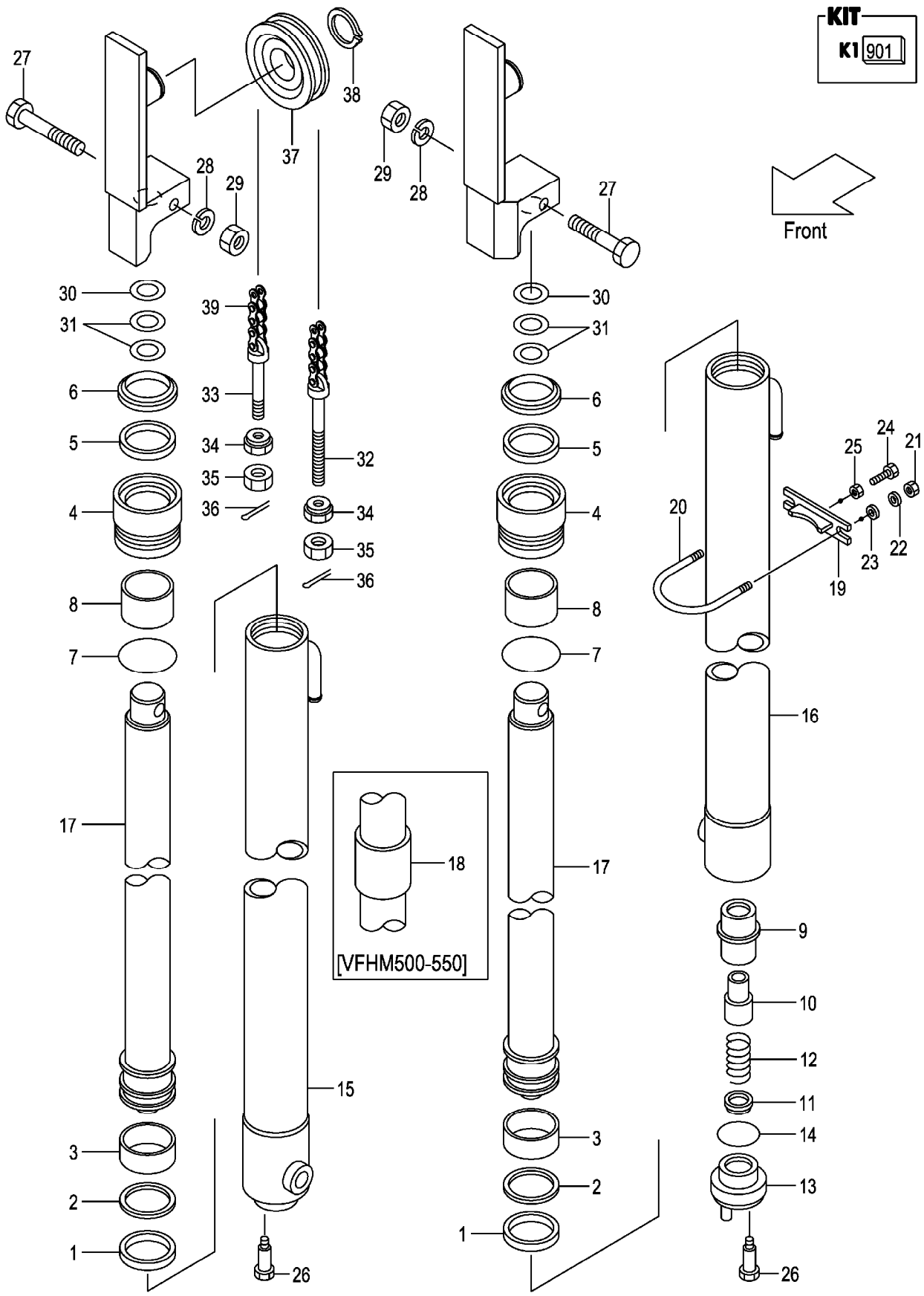

A:VFHM2N4(2T)
B:VFHM2N4(2.5T)

| Item No | Part No. | Mark | Description | | Req'd | Remarks : Serial No. |
|---|---|---|---|---|---|---|
| A1 | 277P0-81702 | | CYL-ASSY,LIFT,RH VFHM435 | ﾘﾌﾄｼﾘﾝﾀﾞｱｯｾﾝ | 1 | INC.1-8,15,17 |
| - | 277P0-81732 | | CYL-ASSY,LIFT,RH VFHM480 | ﾘﾌﾄｼﾘﾝﾀﾞｱｯｾﾝ | 1 | INC.1-8,15,17 |
| - | 277P0-81742 | | CYL-ASSY,LIFT,RH VFHM500 | ﾘﾌﾄｼﾘﾝﾀﾞｱｯｾﾝ | 1 | INC.1-8,15,17,18 |
| - | 277P0-81752 | | CYL-ASSY,LIFT,RH VFHM540 | ﾘﾌﾄｼﾘﾝﾀﾞｱｯｾﾝ | 1 | INC.1-8,15,17,18 |
| - | 277P0-81762 | | CYL-ASSY,LIFT,RH VFHM550 | ﾘﾌﾄｼﾘﾝﾀﾞｱｯｾﾝ | 1 | INC.1-8,15,17,18 |
| A2 | 277P0-81902 | | CYL-ASSY,LIFT,LH VFHM435 | ﾘﾌﾄｼﾘﾝﾀﾞｱｯｾﾝ | 1 | INC.1-14,16,17 |
| - | 277P0-81932 | | CYL-ASSY,LIFT,LH VFHM480 | ﾘﾌﾄｼﾘﾝﾀﾞｱｯｾﾝ | 1 | INC.1-14,16,17 |
| - | 277P0-81942 | | CYL-ASSY,LIFT,LH VFHM500 | ﾘﾌﾄｼﾘﾝﾀﾞｱｯｾﾝ | 1 | INC.1-14,16,17,18 |
| - | 277P0-81952 | | CYL-ASSY,LIFT,LH VFHM540 | ﾘﾌﾄｼﾘﾝﾀﾞｱｯｾﾝ | 1 | INC.1-14,16,17,18 |
| - | 277P0-81962 | | CYL-ASSY,LIFT,LH VFHM550 | ﾘﾌﾄｼﾘﾝﾀﾞｱｯｾﾝ | 1 | INC.1-14,16,17,18 |
| 901 | 277P0-89811 | K1 | KIT,OVERHAUL | ｵｰﾊﾞﾎｰﾙｷｯﾄ | 2 | INC.1-3,5-7 |
| 1 | 23650-83521 | * | PACKING | ﾊﾟｯｷﾝｸﾞ | 2 | |
| 2 | 23650-83531 | * | RING,BACK-UP | ﾘﾝｸﾞ | 2 | |
| 3 | 27970-53141 | * | WEARING | ｳｪｱﾘﾝｸﾞ | 2 | |
| 4 | 232A8-42601 | | CAP,CYL | ｷｬｯﾌﾟ | 2 | |
| 5 | 214A8-42721 | * | PACKING | ﾊﾟｯｷﾝｸﾞ | 2 | |
| 6 | 214A8-46001 | * | SEAL,DUST | ｼｰﾙ | 2 | |
| 7 | 232A8-42631 | * | O-RING | Oﾘﾝｸﾞ | 2 | |
| 8 | 232A8-42621 | | BUSHING | ﾌﾞｯｼﾝｸﾞ | 2 | |
| 9 | 53658-43021 | | SLEEVE | ｽﾘｰﾌﾞ | 1 | (LH) |
| 10 | 53658-43011 | | PISTON | ﾋﾟｽﾄﾝ | 1 | (LH) |
| 11 | 53658-43001 | | VALVE,CHECK | ﾊﾞﾙﾌﾞ | 1 | (LH) |
| 12 | 53658-43031 | | SPRING | ｽﾌﾟﾘﾝｸﾞ | 1 | (LH) |
| 13 | 53658-43041 | | PLUG | ﾌﾟﾗｸﾞ | 1 | (LH) |
| 14 | 03320-00340 | | O-RING | Oﾘﾝｸﾞ | 1 | (LH) |
| 15 | 277P0-81302 | | BODY,CYL,RH VFHM435 | ﾎﾞﾃﾞｨ | 1 | |
| - | 277P0-81332 | | BODY,CYL,RH VFHM480 | ﾎﾞﾃﾞｨ | 1 | |
| - | 277P0-81342 | | BODY,CYL,RH VFHM500 | ﾎﾞﾃﾞｨ | 1 | |
| - | 277P0-81352 | | BODY,CYL,RH VFHM540 | ﾎﾞﾃﾞｨ | 1 | |
| - | 277P0-81362 | | BODY,CYL,RH VFHM550 | ﾎﾞﾃﾞｨ | 1 | |
| 16 | 277P0-81502 | | BODY,CYL,LH VFHM435 | ﾎﾞﾃﾞｨ | 1 | |
| - | 277P0-81532 | | BODY,CYL,LH VFHM480 | ﾎﾞﾃﾞｨ | 1 | |
| - | 277P0-81542 | | BODY,CYL,LH VFHM500 | ﾎﾞﾃﾞｨ | 1 | |
| - | 277P0-81552 | | BODY,CYL,LH VFHM540 | ﾎﾞﾃﾞｨ | 1 | |
| - | 277P0-81562 | | BODY,CYL,LH VFHM550 | ﾎﾞﾃﾞｨ | 1 | |
| 17 | 277P0-81101 | | ROD,PISTON VFHM435 | ﾛｯﾄﾞ | 2 | |
| - | 277P0-81131 | | ROD,PISTON VFHM480 | ﾛｯﾄﾞ | 2 | |
| - | 277P0-81141 | | ROD,PISTON VFHM500 | ﾛｯﾄﾞ | 2 | |
| - | 277P0-81151 | | ROD,PISTON VFHM540 | ﾛｯﾄﾞ | 2 | |
| - | 277P0-81161 | | ROD,PISTON VFHM550 | ﾛｯﾄﾞ | 2 | |

# FIG.227 LIFT CYLINDER (REAR) [VFHM2N4]

(M7020850) リフトシリンダ(リヤー)

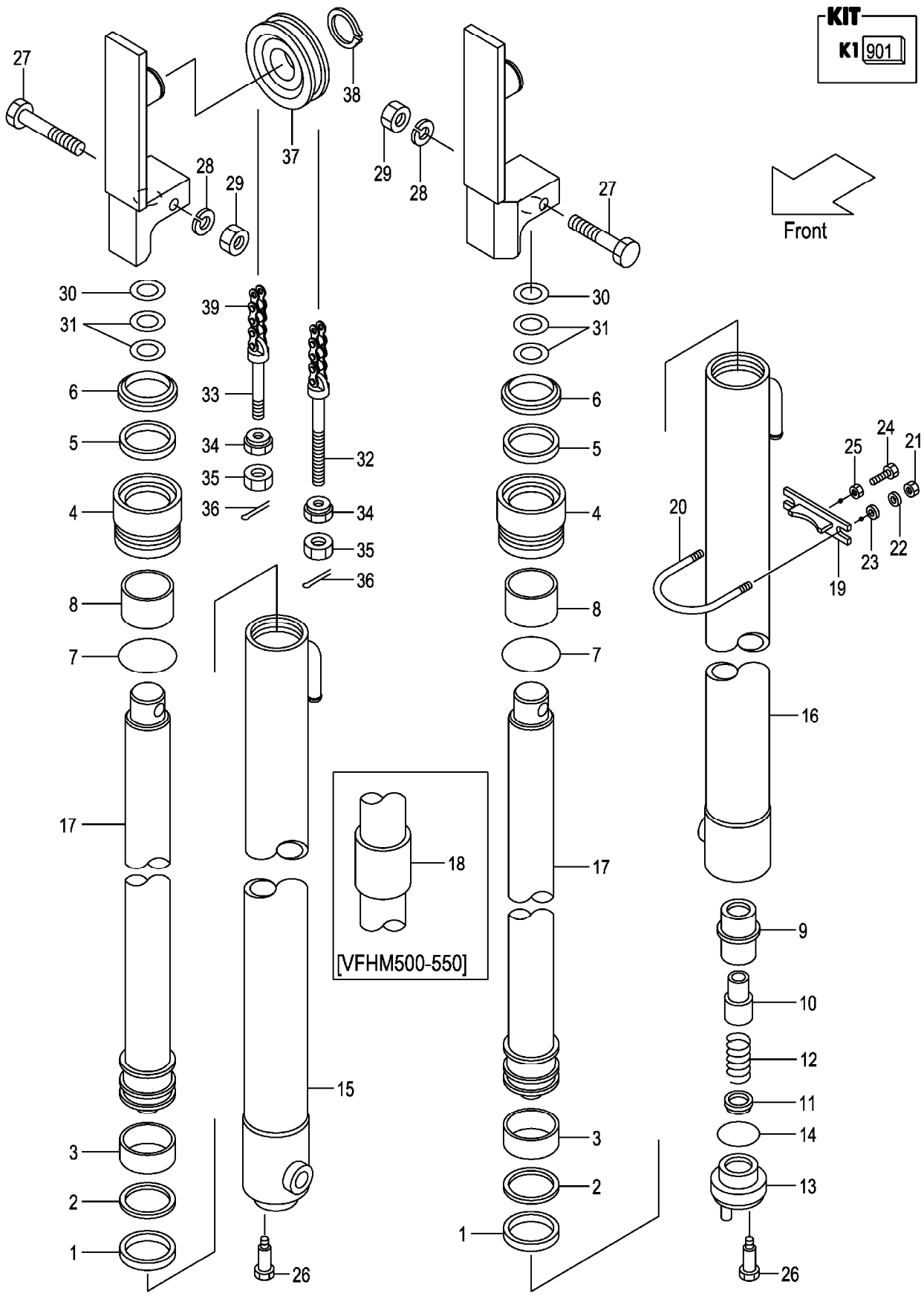

A:VFHM2N4(2T)
B:VFHM2N4(2.5T)

| Item No | Part No. | Mark | Description | | Req'd | Remarks : Serial No. |
|---|---|---|---|---|---|---|
| 18 | 23650-83561 | | SPACER VFHM500 | ｽﾍﾟｰｻ | 2 | |
| - | 23650-83551 | | SPACER VFHM540 | ｽﾍﾟｰｻ | 2 | |
| - | 23650-83561 | | SPACER VFHM550 | ｽﾍﾟｰｻ | 2 | |
| 19 | 22N58-43011 | | SUPPORT,CYL | ｻﾎﾟｰﾄ | 2 | |
| 20 | 234A8-42551 | | U-BOLT | Uﾎﾞﾙﾄ | 2 | |
| 21 | 01400-00010 | | NUT | ﾅｯﾄ | 4 | |
| 22 | 02010-20010 | | WASHER | ﾜｯｼｬ | 4 | |
| 23 | 02000-20010 | | WASHER | ﾜｯｼｬ | 4 | |
| 24 | 01120-12040 | | BOLT | ﾎﾞﾙﾄ | 2 | |
| 25 | 01402-00012 | | NUT | ﾅｯﾄ | 2 | |
| 26 | 214A8-42661 | | BOLT | ﾎﾞﾙﾄ | 2 | |
| 27 | 01100-12070 | | BOLT | ﾎﾞﾙﾄ | 2 | |
| 28 | 02010-00012 | | WASHER | ﾜｯｼｬ | 2 | |
| 29 | 01400-00012 | | NUT | ﾅｯﾄ | 2 | |
| 30 | 23917-42191 | | SHIM,T-1.0 | ｼﾑ | 10 | |
| 31 | 22679-43831 | | SHIM,T-0.5 | ｼﾑ | 10 | |
| 32 | 52672-72231 | | PIN,ANCHOR | ﾋﾟﾝ | 2 | |
| 33 | 23500-82001 | | PIN,ANCHOR | ﾋﾟﾝ | 2 | |
| 34 | 22218-40191 | | NUT | ﾅｯﾄ | 4 | |
| 35 | 01400-00018 | | NUT | ﾅｯﾄ | 4 | |
| 36 | 02200-03030 | | PIN | ﾋﾟﾝ | 4 | |
| 37 | 234A8-43501 | | SHEAVE | ｼｰﾌﾞ | 2 | |
| 38 | 02100-00040 | | RING,SNAP | ｽﾅｯﾌﾟﾘﾝｸﾞ | 2 | |
| 39 | 22679-45991 | | CHAIN,LEAF VFHM435 | ﾁｪｰﾝ | 2 | |
| - | 22679-46071 | | CHAIN,LEAF VFHM480 | ﾁｪｰﾝ | 2 | |
| - | 22679-46111 | | CHAIN,LEAF VFHM500 | ﾁｪｰﾝ | 2 | |
| - | 22679-46191 | | CHAIN,LEAF VFHM540 | ﾁｪｰﾝ | 2 | |
| - | 22679-46211 | | CHAIN,LEAF VFHM550 | ﾁｪｰﾝ | 2 | |

# M E M O

# M E M O

# FIG.228 MAST PIPING [VFHM2N4]

(M7020860) マストパイピング

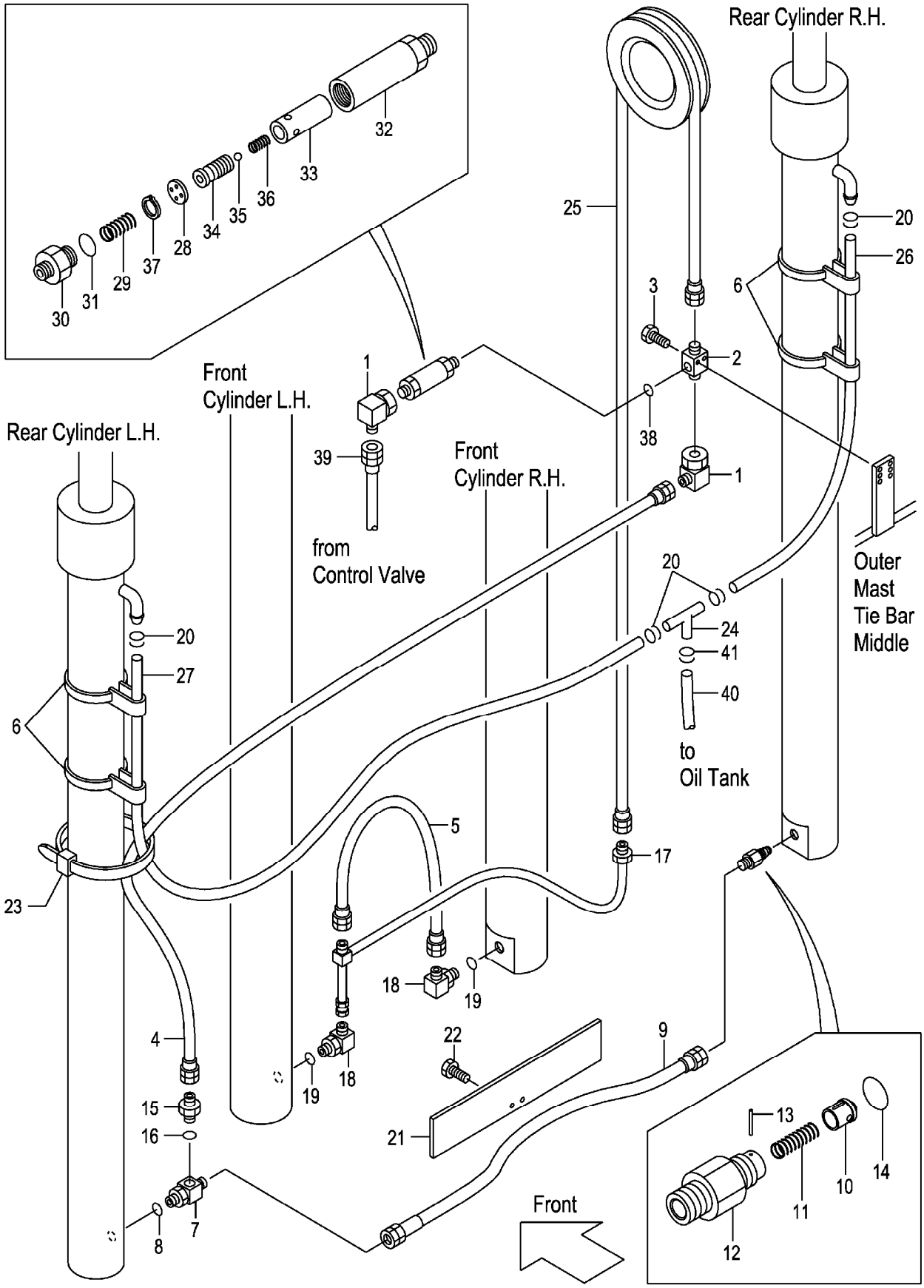

A:VFHM2N4(2T)
B:VFHM2N4(2.5T)

| Item No | Part No. | Mark | Description | | Req'd | Remarks : Serial No. |
|---|---|---|---|---|---|---|
| 1 | 62150-14321 | | ELBOW | ｴﾙﾎﾞ | 2 | |
| 2 | 229F0-94101 | | THREE-WAY | ｽﾘｰｳｪｲ | 1 | |
| 3 | 01184-10040 | | BOLT | ﾎﾞﾙﾄ | 2 | |
| 4 | 22N40-82221 | | HOSE | ﾎｰｽ | 1 | |
| 5 | 22N40-82201 | | HOSE | ﾎｰｽ | 1 | |
| 6 | 22N58-45001 | | BAND | ﾊﾞﾝﾄﾞ | 2 | |
| A1 | 216G0-93101 | | THREE-WAY-ASSY | ｽﾘｰｳｪｲｱｯｾﾝ | 1 | INC.7,8 |
| 7 | NO PART NO. | # | THREE-WAY | ｽﾘｰｳｪｲ | 1 | |
| 8 | 03320-00140 | | O-RING | Oﾘﾝｸﾞ | 1 | |
| 9 | 22N50-92101 | | HOSE | ﾎｰｽ | 1 | |
| A2 | 234A8-40701 | | VALVE-ASSY,CUT | ｶｯﾄﾊﾞﾙﾌﾞｱｯｾﾝ | 1 | INC.10-14 |
| 10 | 234A8-42602 | | PISTON | ﾋﾟｽﾄﾝ | 1 | |
| 11 | 234A8-42611 | | SPRING | ｽﾌﾟﾘﾝｸﾞ | 1 | |
| 12 | 234A8-42622 | | NIPPLE | ﾆｯﾌﾟﾙ | 1 | |
| 13 | 02270-01014 | | PIN | ﾋﾟﾝ | 1 | |
| 14 | 03320-00140 | | O-RING | Oﾘﾝｸﾞ | 1 | |
| A3 | 04134-20404 | | NIPPLE-ASSY | ﾆｯﾌﾟﾙｱｯｾﾝ | 1 | INC.15,16 |
| 15 | NO PART NO. | # | NIPPLE | ﾆｯﾌﾟﾙ | 1 | |
| 16 | 03320-00180 | | O-RING | Oﾘﾝｸﾞ | 1 | |
| 17 | 22N40-81001 | | PIPE | ﾊﾟｲﾌﾟ | 1 | |
| A4 | 22N40-81091 | | ELBOW-ASSY | ｴﾙﾎﾞｱｯｾﾝ | 2 | INC.18,19 |
| 18 | NO PART NO. | # | ELBOW | ｴﾙﾎﾞ | 2 | |
| 19 | 03320-00180 | | O-RING | Oﾘﾝｸﾞ | 2 | |
| 20 | 24329-46201 | | CLIP | ｸﾘｯﾌﾟ | 4 | |
| 21 | 22N40-82251 | | PLATE | ﾌﾟﾚｰﾄ | 1 | |
| 22 | 01183-08016 | | BOLT | ﾎﾞﾙﾄ | 2 | |
| 23 | 25790-94021 | | BAND,HOSE | ﾊﾞﾝﾄﾞ | 3 | |
| 24 | 53675-55051 | | THREE-WAY | ｽﾘｰｳｪｲ | 1 | |
| 25 | 04601-44283 | | HOSE VFHM435 | ﾎｰｽ | 1 | |
| - | 04601-44312 | | HOSE VFHM480 | ﾎｰｽ | 1 | |
| - | 04601-44332 | | HOSE VFHM500 | ﾎｰｽ | 1 | |
| - | 04601-44356 | | HOSE VFHM540 | ﾎｰｽ | 1 | |
| - | 04601-44364 | | HOSE VFHM550 | ﾎｰｽ | 1 | |
| 26 | 04710-04160 | | HOSE,RH VFHM435 | ﾎｰｽ | 1 | |
| - | 04710-04175 | | HOSE,RH VFHM480 | ﾎｰｽ | 1 | |
| - | 04710-04185 | | HOSE,RH VFHM500 | ﾎｰｽ | 1 | |
| - | 04710-04200 | | HOSE,RH VFHM540 | ﾎｰｽ | 1 | |
| - | 04710-04205 | | HOSE,RH VFHM550 | ﾎｰｽ | 1 | |
| 27 | 04710-04165 | | HOSE,LH VFHM435 | ﾎｰｽ | 1 | |
| - | 04710-04180 | | HOSE,LH VFHM480 | ﾎｰｽ | 1 | |
| - | 04710-04190 | | HOSE,LH VFHM500 | ﾎｰｽ | 1 | |
| - | 04710-04205 | | HOSE,LH VFHM540 | ﾎｰｽ | 1 | |
| - | 04710-04210 | | HOSE,LH VFHM550 | ﾎｰｽ | 1 | |
| A5 | 234A8-41001 | | REGULATOR-ASSY,FLOW | ﾌﾛｰﾚｷﾞｭﾚｰﾀｱｯｾﾝ | 1 | INC.28-37 |
| 28 | NO PART NO. | # | PLATE | ﾌﾟﾚｰﾄ | 1 | |
| 29 | 27979-43101 | | SPRING | ｽﾌﾟﾘﾝｸﾞ | 1 | |
| 30 | NO PART NO. | # | NIPPLE | ﾆｯﾌﾟﾙ | 1 | |
| 31 | 03300-00280 | | O-RING | Oﾘﾝｸﾞ | 1 | |
| 32 | NO PART NO. | # | CASE | ｹｰｽ | 1 | |
| 33 | NO PART NO. | # | SLEEVE | ｽﾘｰﾌﾞ | 1 | |

# FIG.228 MAST PIPING [VFHM2N4]

(M7020860) マストパイピング

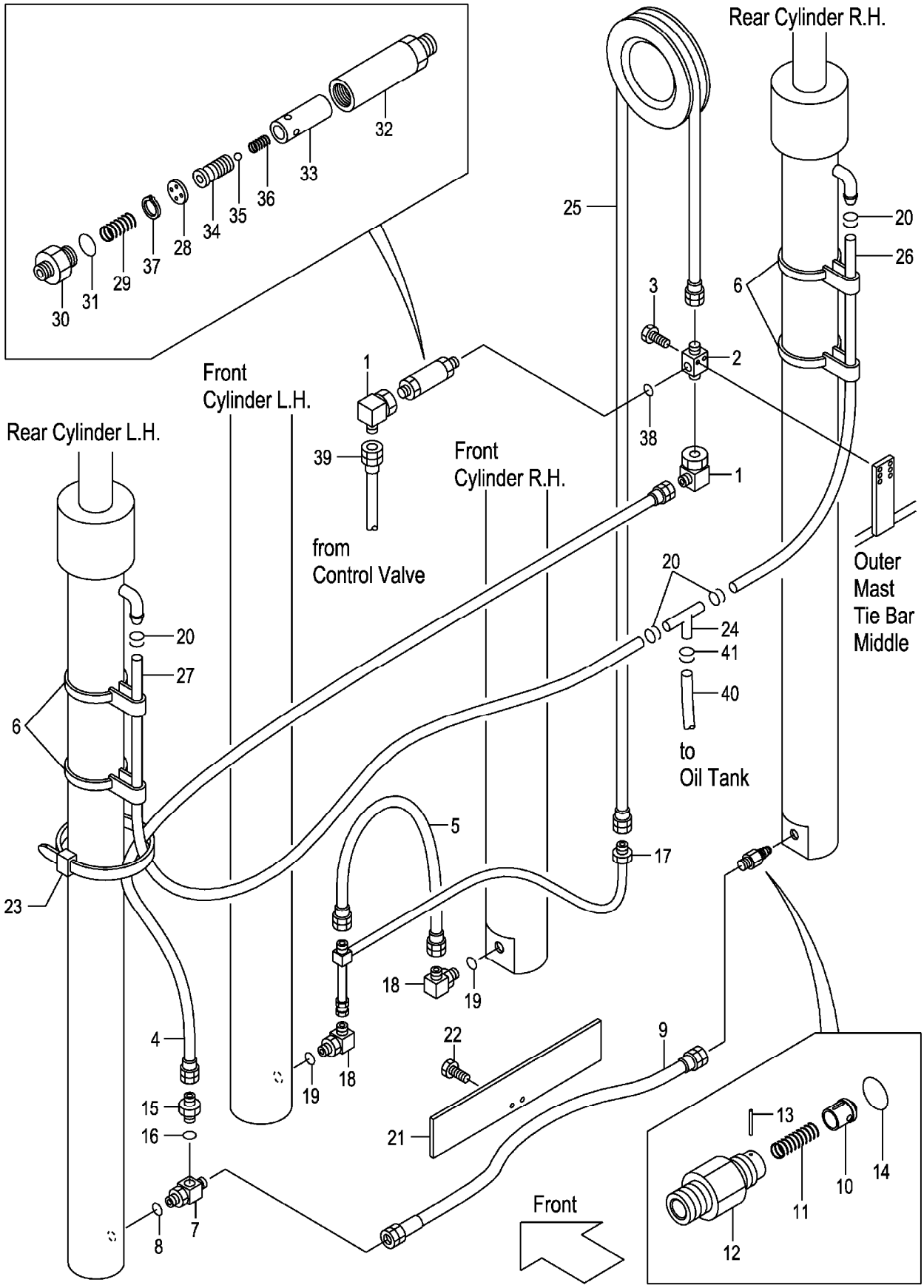

A:VFHM2N4(2T)
B:VFHM2N4(2.5T)

| Item No | Part No. | Mark | Description | | Req'd | Remarks : Serial No. |
|---|---|---|---|---|---|---|
| 34 | NO PART NO. | # | PISTON | ﾋﾟｽﾄﾝ | 1 | |
| 35 | 24459-42951 | | BALL,NYLON | ﾎﾞｰﾙ | 1 | |
| 36 | 214A8-44151 | | SPRING | ｽﾌﾟﾘﾝｸﾞ | 1 | |
| 37 | 02110-00018 | | RING,SNAP | ｽﾅｯﾌﾟﾘﾝｸﾞ | 1 | |
| 38 | 03320-00180 | | O-RING | Oﾘﾝｸﾞ | 1 | |
| 39 | 22N40-82801 | | HOSE | ﾎｰｽ | 1 | |
| 40 | 04710-04150 | | HOSE | ﾎｰｽ | 1 | |
| 41 | 24329-46201 | | CLIP | ｸﾘｯﾌﾟ | 2 | |

PARTS NUMBER INDEX


| Part No. | Fig.No. | Part No. | Fig.No. | Part No. | Fig.No. | Part No. | Fig.No. |
|---|---|---|---|---|---|---|---|
| B-B6111-40022 | 204 | B-B6717-88601 | 219 | B-30131-40017 | 220 | B-402-37128 | 170 |
| B-B6111-40022 | 220 | B-B6717-88602 | 219 | B-30131-50018 | 204 | B-402-37128 | 171 |
| B-B6111-40022 | 220 | B-B6717-92601 | 211 | B-30131-50018 | 220 | B-402-37128 | 171 |
| B-B6111-40023 | 220 | B-B6717-92602 | 211 | B-30131-55009 | 211 | B-402-37128 | 172 |
| B-B6111-40024 | 204 | B-B6717-92701 | 211 | B-30131-55009 | 219 | B-402-37128 | 172 |
| B-B6111-40026 | 220 | B-B6717-92702 | 211 | B-30141-91049 | 204 | B-402-37128 | 173 |
| B-B6111-40034 | 220 | B-B6717-92801 | 211 | B-30161-50046 | 204 | B-402-37128 | 173 |
| B-B6121-75007 | 211 | B-B6717-92802 | 211 | B-30161-50046 | 220 | B-402-37129 | 170 |
| B-B6121-75007 | 219 | B-B6717-92901 | 211 | B-30161-91774 | 204 | B-402-37129 | 171 |
| B-B6181-75007 | 211 | B-B6717-92902 | 211 | B-30161-91774 | 220 | B-402-37129 | 172 |
| B-B6181-75007 | 219 | B-B6717-93001 | 211 | B-30191-40025 | 204 | B-402-37129 | 173 |
| B-B6521-90004 | 211 | B-B6717-93002 | 211 | B-30191-40025 | 220 | B-94721-22101 | 211 |
| B-B6521-90004 | 219 | B-B6717-93101 | 211 | B-30191-55050 | 211 | B-94721-22101 | 219 |
| B-B6551-91008 | 204 | B-B6717-93102 | 211 | B-30191-55050 | 219 | B-95123-07000 | 211 |
| B-B6567-10601 | 220 | B-B6717-93201 | 211 | B-30461-50039 | 204 | B-95123-07000 | 219 |
| B-B6567-10602 | 220 | B-B6717-93202 | 211 | B-30461-50039 | 220 | B-95151-04000 | 220 |
| B-B6567-10701 | 220 | B-B6717-93301 | 211 | B-3050A-00093 | 204 | B-95151-07500 | 211 |
| B-B6567-10702 | 220 | B-B6717-93302 | 211 | B-3050A-00093 | 220 | B-95151-07500 | 219 |
| B-B6567-10801 | 220 | B-B6717-93401 | 211 | B-3050B-00119 | 204 | BK-7341006000 | 66 |
| B-B6567-10802 | 220 | B-B6717-93402 | 211 | B-3050B-00119 | 220 | BK-8059061000 | 66 |
| B-B6567-10901 | 220 | B-B6717-93501 | 211 | B-30961-04012 | 204 | BK-8104209010 | 66 |
| B-B6567-10902 | 220 | B-B6717-93502 | 211 | B-30961-04012 | 220 | BK-81431A4700 | 66 |
| B-B6567-11001 | 220 | B-B6717-93601 | 211 | B-30961-55013 | 211 | C-11452-2B0-BF | 192 |
| B-B6567-11002 | 220 | B-B6717-93602 | 211 | B-30961-55013 | 219 | C-11452-2B0-BF | 192 |
| B-B6567-11101 | 220 | B-B6717-93701 | 211 | B-402-00704-13 | 170 | C-11452-2B0-BF | 194 |
| B-B6567-11102 | 220 | B-B6717-93702 | 211 | B-402-00704-13 | 171 | C-11452-2B0-BF | 196 |
| B-B6567-11201 | 220 | B-B6717-93801 | 211 | B-402-00704-13 | 172 | C-11452-2B0-CZ | 192 |
| B-B6567-11202 | 220 | B-B6717-93802 | 211 | B-402-00704-13 | 173 | C-11452-2B0-CZ | 196 |
| B-B6567-11301 | 220 | B-B6717-93901 | 211 | B-402-30905-02 | 170 | C-11452-2B0-C | 192 |
| B-B6567-11302 | 220 | B-B6717-93902 | 211 | B-402-30905-03 | 171 | C-11452-2B0-C | 194 |
| B-B6567-11401 | 220 | B-B6717-94001 | 211 | B-402-30905-04 | 172 | C-11452-2B0-DN | 192 |
| B-B6567-11402 | 220 | B-B6717-94002 | 211 | B-402-30905-05 | 173 | C-11452-2B0-DN | 192 |
| B-B6567-11501 | 220 | B-B6717-94101 | 211 | B-402-36066 | 170 | C-11452-2B0-DN | 196 |
| B-B6567-11502 | 220 | B-B6717-94102 | 211 | B-402-36066 | 171 | C-11452-2B0-DN | 198 |
| B-B6567-11601 | 220 | B-B6717-94201 | 211 | B-402-36066 | 172 | C-11452-2B0-E | 192 |
| B-B6567-11602 | 220 | B-B6717-94202 | 211 | B-402-36066 | 173 | C-11452-2B0-E | 192 |
| B-B6711-00001 | 211 | B-B6717-94301 | 211 | B-402-36067 | 170 | C-11452-2B0-E | 192 |
| B-B6711-00001 | 219 | B-B6717-94302 | 211 | B-402-36067 | 170 | C-11452-2B0-E | 192 |
| B-B6717-87601 | 219 | B-B675A-00006 | 211 | B-402-36067 | 171 | C-11452-2B0-E | 192 |
| B-B6717-87602 | 219 | B-B675A-00006 | 219 | B-402-36067 | 171 | C-11452-2B0-E | 194 |
| B-B6717-87701 | 219 | B-B675B-00003 | 211 | B-402-36067 | 172 | C-11452-2B0-E | 195 |
| B-B6717-87702 | 219 | B-B675B-00003 | 219 | B-402-36067 | 172 | C-11452-2B0-E | 196 |
| B-B6717-87801 | 219 | B-B6983-75007 | 211 | B-402-36067 | 173 | C-11452-2B0-E | 197 |
| B-B6717-87802 | 219 | B-B6983-75007 | 219 | B-402-36067 | 173 | C-11452-2B0-E | 198 |
| B-B6717-87901 | 219 | B-C4300-22001 | 211 | B-402-36151 | 170 | C-11452-2B0-FI | 192 |
| B-B6717-87902 | 219 | B-C4300-22001 | 219 | B-402-36151 | 170 | C-11452-2B0-FI | 198 |
| B-B6717-88001 | 219 | B-023-06632-41 | 170 | B-402-36151 | 171 | C-11452-2B0-GR | 192 |
| B-B6717-88002 | 219 | B-023-06632-41 | 171 | B-402-36151 | 171 | C-11452-2B0-GR | 196 |
| B-B6717-88101 | 219 | B-023-06632-41 | 172 | B-402-36151 | 172 | C-11452-2B0-G | 192 |
| B-B6717-88102 | 219 | B-023-06632-41 | 173 | B-402-36151 | 172 | C-11452-2B0-G | 196 |
| B-B6717-88201 | 211 | B-026-50103 | 170 | B-402-36151 | 173 | C-11452-2B0-H | 192 |
| B-B6717-88201 | 219 | B-026-50103 | 171 | B-402-36151 | 173 | C-11452-2B0-H | 196 |
| B-B6717-88202 | 211 | B-026-50103 | 172 | B-402-36603 | 170 | C-11452-2B0-I | 192 |
| B-B6717-88202 | 219 | B-026-50103 | 173 | B-402-36603 | 171 | C-11452-2B0-I | 196 |
| B-B6717-88301 | 219 | B-26570-30115 | 211 | B-402-36603 | 172 | C-11452-2B0-NR | 192 |
| B-B6717-88302 | 219 | B-26570-30115 | 219 | B-402-36603 | 173 | C-11452-2B0-NR | 196 |
| B-B6717-88401 | 219 | B-30096-02207 | 220 | B-402-36924 | 171 | C-11452-2B0-O | 192 |
| B-B6717-88402 | 219 | B-30121-50102 | 204 | B-402-36924 | 172 | C-11452-2B0-O | 196 |
| B-B6717-88501 | 219 | B-30121-50102 | 220 | B-402-36924 | 173 | C-11452-2B0-PL | 192 |
| B-B6717-88502 | 219 | B-30131-40017 | 204 | B-402-37128 | 170 | C-11452-2B0-PL | 196 |

PARTS NUMBER INDEX


| Part No. | Fig.No. | Part No. | Fig.No. | Part No. | Fig.No. | Part No. | Fig.No. |
|---|---|---|---|---|---|---|---|
| C-11452-2B0-P | 192 | C-11452-2N0-S | 194 | 01100-10030 | 135 | 01103-10030 | 65 |
| C-11452-2B0-P | 196 | C-11452-2N0-S | 196 | 01100-10050 | 58 | 01103-10030 | 69 |
| C-11452-2B0-R | 192 | C-11452-2N0-TR | 192 | 01100-10050 | 58 | 01103-10030 | 69 |
| C-11452-2B0-R | 194 | C-11452-2N0-TR | 196 | 01100-10050 | 59 | 01103-10035 | 60 |
| C-11452-2B0-SW | 192 | C-11452-2N5-D | 192 | 01100-10050 | 59 | 01103-10035 | 60 |
| C-11452-2B0-SW | 198 | C-11452-2N5-D | 193 | 01100-10050 | 60 | 01103-10035 | 60 |
| C-11452-2B0-S | 192 | HC26094-17021 | 96 | 01100-10050 | 60 | 01103-10035 | 60 |
| C-11452-2B0-S | 192 | HC32G4-10101 | 96 | 01100-12020 | 125 | 01103-10035 | 77 |
| C-11452-2B0-S | 194 | HC516G2-42411 | 96 | 01100-12070 | 227 | 01103-10035 | 136 |
| C-11452-2B0-S | 196 | R-402-00710-12 | 168 | 01100-12080 | 226 | 01103-10040 | 63 |
| C-11452-2B0-TR | 192 | R-402-00710-12 | 169 | 01100-14025 | 202 | 01103-10040 | 69 |
| C-11452-2B0-TR | 196 | R-402-65004-03 | 168 | 01100-14025 | 208 | 01103-10045 | 201 |
| C-11452-2B5-D | 192 | R-402-65004-28 | 169 | 01100-14025 | 208 | 01103-10045 | 207 |
| C-11452-2B5-D | 193 | R-403-24323 | 169 | 01100-14025 | 208 | 01103-10045 | 215 |
| C-11452-2N0-BF | 192 | W-K2PK-M | 200 | 01100-14025 | 208 | 01103-10045 | 223 |
| C-11452-2N0-BF | 192 | W-K2PK-M | 206 | 01100-14025 | 216 | 01103-10050 | 136 |
| C-11452-2N0-BF | 194 | W-K2PK-M | 214 | 01100-14025 | 224 | 01103-10060 | 69 |
| C-11452-2N0-BF | 196 | W-K2PK-M | 222 | 01100-14030 | 202 | 01103-10065 | 65 |
| C-11452-2N0-CZ | 192 | 01030-04014 | 72 | 01100-14030 | 208 | 01103-10075 | 136 |
| C-11452-2N0-CZ | 196 | 01030-04020 | 78 | 01100-14030 | 208 | 01103-12025 | 1 |
| C-11452-2N0-C | 192 | 01030-05055 | 42 | 01100-14030 | 208 | 01103-12025 | 2 |
| C-11452-2N0-C | 194 | 01030-05055 | 43 | 01100-14030 | 216 | 01103-12030 | 1 |
| C-11452-2N0-DN | 192 | 01030-05055 | 43 | 01100-14030 | 216 | 01103-12030 | 2 |
| C-11452-2N0-DN | 192 | 01030-05055 | 43 | 01100-14030 | 216 | 01103-14040 | 204 |
| C-11452-2N0-DN | 196 | 01030-06010 | 98 | 01100-14030 | 224 | 01103-14040 | 212 |
| C-11452-2N0-DN | 198 | 01031-06065 | 127 | 01100-14035 | 208 | 01103-14040 | 220 |
| C-11452-2N0-E | 192 | 01033-05014 | 29 | 01100-14035 | 216 | 01103-16065 | 203 |
| C-11452-2N0-E | 192 | 01033-05014 | 30 | 01100-16020 | 154 | 01103-16065 | 209 |
| C-11452-2N0-E | 192 | 01033-06012 | 61 | 01100-16040 | 122 | 01103-16065 | 217 |
| C-11452-2N0-E | 192 | 01043-03010 | 26 | 01100-16045 | 100 | 01103-16065 | 225 |
| C-11452-2N0-E | 192 | 01044-04014 | 72 | 01100-16050 | 225 | 01106-10030 | 92 |
| C-11452-2N0-E | 194 | 01066-08008 | 68 | 01100-16060 | 217 | 01106-10035 | 92 |
| C-11452-2N0-E | 195 | 01066-10012 | 190 | 01100-16070 | 211 | 01106-10045 | 92 |
| C-11452-2N0-E | 196 | 01066-10012 | 190 | 01100-16070 | 219 | 01106-10060 | 92 |
| C 11452 2N0 E | 197 | 01100 04012 | 26 | 01100-16075 | 211 | 01106-12040 | 87 |
| C-11452-2N0-E | 198 | 01100-05010 | 1 | 01103-08016 | 58 | 01109-08020 | 21 |
| C-11452-2N0-FI | 192 | 01100-06020 | 78 | 01103-08016 | 60 | 01109-12025 | 154 |
| C-11452-2N0-FI | 198 | 01100-06055 | 181 | 01103-08016 | 62 | 01110-10025 | 95 |
| C-11452-2N0-GR | 192 | 01100-06055 | 183 | 01103-08016 | 70 | 01110-30150 | 152 |
| C-11452-2N0-GR | 196 | 01100-08016 | 56 | 01103-08016 | 92 | 01110-30150 | 153 |
| C-11452-2N0-G | 192 | 01100-08020 | 53 | 01103 08016 | 98 | 01113 10035 | 95 |
| C-11452-2N0-G | 196 | 01100-08020 | 53 | 01103-08016 | 99 | 01113-10035 | 96 |
| C-11452-2N0-H | 192 | 01100-08020 | 53 | 01103-08020 | 63 | 01113-30200 | 153 |
| C-11452-2N0-H | 196 | 01100-08020 | 56 | 01103-08030 | 69 | 01113-30250 | 153 |
| C-11452-2N0-I | 192 | 01100-08020 | 65 | 01103-08035 | 58 | 01120-10040 | 132 |
| C-11452-2N0-I | 196 | 01100-08020 | 80 | 01103-08035 | 59 | 01120-10050 | 130 |
| C-11452-2N0-NR | 192 | 01100-08020 | 81 | 01103-08035 | 60 | 01120-12040 | 204 |
| C-11452-2N0-NR | 196 | 01100-08025 | 61 | 01103-08040 | 58 | 01120-12040 | 204 |
| C-11452-2N0-O | 192 | 01100-08025 | 71 | 01103-08040 | 58 | 01120-12040 | 227 |
| C-11452-2N0-O | 196 | 01100-08025 | 128 | 01103-08040 | 59 | 01123-10045 | 63 |
| C-11452-2N0-PL | 192 | 01100-08030 | 19 | 01103-08040 | 59 | 01141-06012 | 98 |
| C-11452-2N0-PL | 196 | 01100-08065 | 6 | 01103-08040 | 60 | 01141-06012 | 99 |
| C-11452-2N0-P | 192 | 01100-08065 | 8 | 01103-08040 | 60 | 01170-04012 | 21 |
| C-11452-2N0-P | 196 | 01100-10025 | 129 | 01103-08040 | 69 | 01170-05045 | 69 |
| C-11452-2N0-R | 192 | 01100-10025 | 131 | 01103-10018 | 211 | 01171-06025 | 123 |
| C-11452-2N0-R | 194 | 01100-10025 | 132 | 01103-10018 | 219 | 01181-08016 | 156 |
| C-11452-2N0-SW | 192 | 01100-10025 | 133 | 01103-10020 | 226 | 01181-08016 | 156 |
| C-11452-2N0-SW | 198 | 01100-10025 | 134 | 01103-10025 | 136 | 01182-08025 | 20 |
| C-11452-2N0-S | 192 | 01100-10025 | 136 | 01103-10030 | 60 | 01183-05010 | 21 |
| C-11452-2N0-S | 192 | 01100-10030 | 132 | 01103-10030 | 60 | 01183-06010 | 31 |

PARTS NUMBER INDEX


| Part No. | Fig.No. | Part No. | Fig.No. | Part No. | Fig.No. | Part No. | Fig.No. |
|---|---|---|---|---|---|---|---|
| 01183-06010 | 32 | 01184-10020 | 212 | 01185-08016 | 56 | 01400-00006 | 165 |
| 01183-06010 | 33 | 01184-10025 | 136 | 01185-08016 | 65 | 01400-00008 | 1 |
| 01183-06010 | 34 | 01184-10025 | 146 | 01185-08016 | 71 | 01400-00008 | 1 |
| 01183-06010 | 134 | 01184-10025 | 225 | 01185-08016 | 98 | 01400-00008 | 20 |
| 01183-06010 | 135 | 01184-10030 | 134 | 01185-08016 | 128 | 01400-00008 | 48 |
| 01183-06010 | 136 | 01184-10030 | 135 | 01185-08016 | 129 | 01400-00008 | 49 |
| 01183-06012 | 21 | 01184-10030 | 135 | 01185-08016 | 130 | 01400-00008 | 50 |
| 01183-06012 | 129 | 01184-10030 | 136 | 01185-08016 | 134 | 01400-00008 | 53 |
| 01183-06012 | 130 | 01184-10040 | 221 | 01185-08016 | 135 | 01400-00008 | 53 |
| 01183-06012 | 175 | 01184-10040 | 228 | 01185-08016 | 136 | 01400-00008 | 53 |
| 01183-06012 | 176 | 01184-10050 | 146 | 01185-08016 | 155 | 01400-00008 | 69 |
| 01183-06012 | 177 | 01184-10055 | 136 | 01185-08016 | 158 | 01400-00008 | 70 |
| 01183-06012 | 178 | 01184-12025 | 201 | 01185-08016 | 160 | 01400-00008 | 71 |
| 01183-06016 | 213 | 01184-12025 | 207 | 01185-08016 | 161 | 01400-00008 | 72 |
| 01183-06016 | 213 | 01184-12025 | 210 | 01185-08016 | 162 | 01400-00008 | 80 |
| 01183-06020 | 210 | 01184-12025 | 210 | 01185-08016 | 184 | 01400-00008 | 81 |
| 01183-06020 | 210 | 01184-12025 | 210 | 01185-08016 | 184 | 01400-00008 | 85 |
| 01183-06020 | 210 | 01184-12025 | 215 | 01185-08016 | 189 | 01400-00008 | 85 |
| 01183-06020 | 218 | 01184-12025 | 218 | 01185-08020 | 11 | 01400-00008 | 86 |
| 01183-06020 | 218 | 01184-12025 | 218 | 01185-08020 | 12 | 01400-00008 | 86 |
| 01183-06020 | 218 | 01184-12025 | 218 | 01185-08020 | 20 | 01400-00008 | 166 |
| 01183-08012 | 21 | 01184-12025 | 223 | 01185-08020 | 48 | 01400-00008 | 167 |
| 01183-08012 | 55 | 01184-12030 | 140 | 01185-08020 | 53 | 01400-00010 | 58 |
| 01183-08012 | 61 | 01184-12050 | 201 | 01185-08020 | 61 | 01400-00010 | 58 |
| 01183-08012 | 163 | 01185-04010 | 98 | 01185-08020 | 221 | 01400-00010 | 59 |
| 01183-08012 | 164 | 01185-04012 | 26 | 01185-08025 | 85 | 01400-00010 | 59 |
| 01183-08012 | 164 | 01185-06016 | 31 | 01185-08025 | 85 | 01400-00010 | 60 |
| 01183-08012 | 175 | 01185-06016 | 32 | 01185-08025 | 86 | 01400-00010 | 60 |
| 01183-08012 | 176 | 01185-06016 | 33 | 01185-08025 | 86 | 01400-00010 | 63 |
| 01183-08012 | 177 | 01185-06016 | 34 | 01185-08025 | 164 | 01400-00010 | 98 |
| 01183-08012 | 178 | 01185-08012 | 83 | 01185-08025 | 164 | 01400-00010 | 99 |
| 01183-08016 | 3 | 01185-08012 | 83 | 01185-08030 | 158 | 01400-00010 | 102 |
| 01183-08016 | 4 | 01185-08012 | 84 | 01185-10016 | 158 | 01400-00010 | 129 |
| 01183-08016 | 55 | 01185-08012 | 84 | 01185-10055 | 168 | 01400-00010 | 130 |
| 01183-08016 | 55 | 01185-08015 | 165 | 01185-10055 | 169 | 01400-00010 | 134 |
| 01183-08016 | 62 | 01185-08016 | 4 | 01186-08020 | 56 | 01400-00010 | 135 |
| 01183-08016 | 70 | 01185-08016 | 5 | 01186-08025 | 77 | 01400-00010 | 136 |
| 01183-08016 | 131 | 01185-08016 | 6 | 01186-10016 | 189 | 01400-00010 | 204 |
| 01183-08016 | 132 | 01185-08016 | 8 | 01186-10016 | 190 | 01400-00010 | 204 |
| 01183-08016 | 133 | 01185-08016 | 9 | 01186-10020 | 23 | 01400-00010 | 227 |
| 01183-08016 | 155 | 01185-08016 | 10 | 01186-10020 | 24 | 01400-00012 | 1 |
| 01183-08016 | 228 | 01185-08016 | 11 | 01186-10020 | 25 | 01400-00012 | 2 |
| 01183-08020 | 7 | 01185-08016 | 12 | 01186-10020 | 221 | 01400-00012 | 115 |
| 01183-08020 | 8 | 01185-08016 | 18 | 01186-10030 | 102 | 01400-00012 | 117 |
| 01183-08020 | 189 | 01185-08016 | 21 | 01186-10030 | 102 | 01400-00012 | 119 |
| 01183-08025 | 187 | 01185-08016 | 31 | 01186-10030 | 102 | 01400-00012 | 121 |
| 01183-08035 | 70 | 01185-08016 | 32 | 01186-12025 | 123 | 01400-00012 | 122 |
| 01183-10030 | 58 | 01185-08016 | 33 | 01186-12025 | 154 | 01400-00012 | 204 |
| 01183-10030 | 58 | 01185-08016 | 34 | 01186-12030 | 21 | 01400-00012 | 204 |
| 01183-10030 | 59 | 01185-08016 | 39 | 01186-12040 | 123 | 01400-00012 | 227 |
| 01183-10030 | 59 | 01185-08016 | 40 | 01213-10025 | 61 | 01400-00018 | 204 |
| 01183-10035 | 58 | 01185-08016 | 47 | 01218-10025 | 1 | 01400-00018 | 211 |
| 01183-10035 | 58 | 01185-08016 | 47 | 01218-10035 | 2 | 01400-00018 | 219 |
| 01183-10035 | 58 | 01185-08016 | 48 | 01400-00004 | 78 | 01400-00018 | 220 |
| 01183-10035 | 58 | 01185-08016 | 48 | 01400-00006 | 39 | 01400-00018 | 226 |
| 01183-10035 | 59 | 01185-08016 | 49 | 01400-00006 | 40 | 01400-00018 | 227 |
| 01183-10035 | 59 | 01185-08016 | 49 | 01400-00006 | 78 | 01400-10016 | 103 |
| 01183-10035 | 59 | 01185-08016 | 50 | 01400-00006 | 128 | 01400-10016 | 105 |
| 01184-10012 | 221 | 01185-08016 | 50 | 01400-00006 | 155 | 01400-10016 | 107 |
| 01184-10016 | 63 | 01185-08016 | 55 | 01400-00006 | 157 | 01400-10016 | 109 |

PARTS NUMBER INDEX


| Part No. | Fig.No. | Part No. | Fig.No. | Part No. | Fig.No. | Part No. | Fig.No. |
|---|---|---|---|---|---|---|---|
| 01400-10020 | 87 | 02000-00008 | 164 | 02010-00008 | 8 | 02011-00008 | 63 |
| 01400-10020 | 88 | 02000-00008 | 164 | 02010-00008 | 19 | 02011-00008 | 69 |
| 01400-20008 | 23 | 02000-00008 | 226 | 02010-00008 | 20 | 02011-00008 | 69 |
| 01400-20010 | 24 | 02000-00010 | 13 | 02010-00008 | 23 | 02011-00008 | 70 |
| 01400-20010 | 25 | 02000-00010 | 19 | 02010-00008 | 56 | 02011-00008 | 92 |
| 01400-30008 | 25 | 02000-00010 | 21 | 02010-00008 | 58 | 02011-00008 | 98 |
| 01402-00006 | 61 | 02000-00010 | 23 | 02010-00008 | 59 | 02011-00008 | 99 |
| 01402-00008 | 61 | 02000-00010 | 24 | 02010-00008 | 60 | 02011-00010 | 63 |
| 01402-00008 | 71 | 02000-00010 | 24 | 02010-00008 | 72 | 02011-00010 | 65 |
| 01402-00008 | 128 | 02000-00010 | 25 | 02010-00008 | 85 | 02011-00010 | 69 |
| 01402-00008 | 141 | 02000-00010 | 98 | 02010-00008 | 85 | 02011-00010 | 92 |
| 01402-00008 | 143 | 02000-00010 | 99 | 02010-00008 | 86 | 02011-00010 | 95 |
| 01402-00008 | 144 | 02000-00010 | 102 | 02010-00008 | 86 | 02011-00010 | 96 |
| 01402-00010 | 131 | 02000-00010 | 129 | 02010-00008 | 166 | 02011-00010 | 211 |
| 01402-00010 | 132 | 02000-00010 | 130 | 02010-00008 | 167 | 02011-00010 | 219 |
| 01402-00010 | 133 | 02000-00010 | 136 | 02010-00008 | 226 | 02011-00010 | 226 |
| 01402-00010 | 134 | 02000-00010 | 155 | 02010-00010 | 24 | 02011-00012 | 1 |
| 01402-00010 | 136 | 02000-00010 | 226 | 02010-00010 | 25 | 02011-00012 | 2 |
| 01402-00010 | 200 | 02000-00012 | 21 | 02010-00010 | 58 | 02011-00012 | 87 |
| 01402-00010 | 206 | 02000-00012 | 94 | 02010-00010 | 58 | 02011-00012 | 115 |
| 01402-00010 | 214 | 02000-00012 | 122 | 02010-00010 | 59 | 02011-00012 | 117 |
| 01402-00010 | 222 | 02000-00012 | 210 | 02010-00010 | 59 | 02011-00012 | 119 |
| 01402-00012 | 226 | 02000-00012 | 210 | 02010-00010 | 60 | 02011-00012 | 121 |
| 01402-00012 | 227 | 02000-00012 | 210 | 02010-00010 | 60 | 02011-00014 | 204 |
| 01402-00018 | 211 | 02000-00012 | 218 | 02010-00010 | 98 | 02011-00014 | 212 |
| 01402-10014 | 94 | 02000-00012 | 218 | 02010-00010 | 99 | 02011-00014 | 220 |
| 01412-00030 | 98 | 02000-00012 | 218 | 02010-00010 | 135 | 02011-00016 | 103 |
| 01412-00030 | 99 | 02000-00014 | 94 | 02010-00010 | 136 | 02011-00016 | 105 |
| 01420-00006 | 39 | 02000-00016 | 217 | 02010-00012 | 122 | 02011-00016 | 107 |
| 01420-00006 | 40 | 02000-00016 | 225 | 02010-00012 | 125 | 02011-00016 | 109 |
| 02000-00004 | 21 | 02000-00022 | 63 | 02010-00012 | 227 | 02011-00016 | 203 |
| 02000-00004 | 26 | 02000-00024 | 62 | 02010-00014 | 202 | 02011-00016 | 209 |
| 02000-00004 | 78 | 02000-00027 | 70 | 02010-00014 | 208 | 02011-00016 | 217 |
| 02000-00005 | 175 | 02000-00030 | 98 | 02010-00014 | 208 | 02011-00016 | 225 |
| 02000 00005 | 176 | 02000 00030 | 99 | 02010-00014 | 216 | 02013-00008 | 21 |
| 02000-00005 | 177 | 02000-20010 | 204 | 02010-00014 | 216 | 02013-00008 | 25 |
| 02000-00005 | 178 | 02000-20010 | 204 | 02010-00014 | 216 | 02013-00012 | 154 |
| 02000-00006 | 39 | 02000-20010 | 212 | 02010-00014 | 224 | 02100-00020 | 63 |
| 02000-00006 | 40 | 02000-20010 | 212 | 02010-00016 | 100 | 02100-00020 | 94 |
| 02000-00006 | 61 | 02000-20010 | 220 | 02010-00016 | 122 | 02100-00022 | 63 |
| 02000-00006 | 128 | 02000-20010 | 220 | 02010 00016 | 154 | 02100 00025 | 62 |
| 02000-00006 | 129 | 02000-20010 | 227 | 02010-00016 | 211 | 02100-00025 | 70 |
| 02000-00006 | 129 | 02001-00008 | 25 | 02010-00016 | 217 | 02100-00028 | 70 |
| 02000-00006 | 130 | 02001-00012 | 154 | 02010-00016 | 219 | 02100-00030 | 64 |
| 02000-00006 | 130 | 02010-00004 | 26 | 02010-00016 | 225 | 02100-00040 | 68 |
| 02000-00006 | 132 | 02010-00004 | 72 | 02010-00020 | 87 | 02100-00040 | 204 |
| 02000-00006 | 157 | 02010-00004 | 78 | 02010-00030 | 152 | 02100-00040 | 211 |
| 02000-00008 | 1 | 02010-00005 | 1 | 02010-00030 | 153 | 02100-00040 | 219 |
| 02000-00008 | 1 | 02010-00006 | 39 | 02010-10006 | 98 | 02100-00040 | 220 |
| 02000-00008 | 6 | 02010-00006 | 40 | 02010-10006 | 99 | 02100-00040 | 227 |
| 02000-00008 | 20 | 02010-00006 | 78 | 02010-20010 | 204 | 02100-00045 | 201 |
| 02000-00008 | 23 | 02010-00006 | 128 | 02010-20010 | 204 | 02100-00045 | 207 |
| 02000-00008 | 98 | 02010-00006 | 155 | 02010-20010 | 212 | 02110-00014 | 226 |
| 02000-00008 | 99 | 02010-00006 | 157 | 02010-20010 | 212 | 02110-00018 | 205 |
| 02000-00008 | 134 | 02010-00006 | 165 | 02010-20010 | 220 | 02110-00018 | 213 |
| 02000-00008 | 135 | 02010-00006 | 181 | 02010-20010 | 220 | 02110-00018 | 221 |
| 02000-00008 | 136 | 02010-00006 | 183 | 02010-20010 | 227 | 02110-00018 | 228 |
| 02000-00008 | 155 | 02010-00008 | 1 | 02011-00008 | 58 | 02110-00022 | 69 |
| 02000-00008 | 156 | 02010-00008 | 1 | 02011-00008 | 60 | 02110-00028 | 226 |
| 02000-00008 | 163 | 02010-00008 | 6 | 02011-00008 | 62 | 02110-00030 | 69 |

PARTS NUMBER INDEX


| Part No. | Fig.No. | Part No. | Fig.No. | Part No. | Fig.No. | Part No. | Fig.No. |
|---|---|---|---|---|---|---|---|
| 02110-00035 | 122 | 03000-06208 | 64 | 03320-00180 | 174 | 04691-02100 | 186 |
| 02110-00037 | 94 | 03000-06208 | 64 | 03320-00180 | 181 | 04691-04050 | 183 |
| 02120-00038 | 64 | 03000-06208 | 67 | 03320-00180 | 183 | 04691-04070 | 181 |
| 02120-00040 | 64 | 03000-06210 | 91 | 03320-00180 | 205 | 04691-04070 | 183 |
| 02120-00040 | 67 | 03000-06306 | 64 | 03320-00180 | 212 | 04691-04123 | 180 |
| 02121-00058 | 68 | 03000-06306 | 64 | 03320-00180 | 213 | 04691-04123 | 182 |
| 02200-02020 | 134 | 03000-06306 | 67 | 03320-00180 | 213 | 04710-04005 | 149 |
| 02200-02020 | 135 | 03000-06306 | 68 | 03320-00180 | 221 | 04710-04015 | 186 |
| 02200-02020 | 136 | 03003-06306 | 64 | 03320-00180 | 221 | 04710-04018 | 186 |
| 02200-02020 | 163 | 03020-06904 | 94 | 03320-00180 | 221 | 04710-04045 | 186 |
| 02200-02020 | 164 | 03071-30207 | 98 | 03320-00180 | 228 | 04710-04060 | 186 |
| 02200-02020 | 164 | 03071-30207 | 99 | 03320-00180 | 228 | 04710-04080 | 189 |
| 02200-03020 | 129 | 03071-30211 | 98 | 03320-00180 | 228 | 04710-04090 | 189 |
| 02200-03020 | 130 | 03071-30211 | 99 | 03320-00210 | 226 | 04710-04110 | 205 |
| 02200-03030 | 204 | 03071-30214 | 88 | 03320-00240 | 174 | 04710-04120 | 205 |
| 02200-03030 | 211 | 03126-83201 | 98 | 03320-00280 | 205 | 04710-04130 | 205 |
| 02200-03030 | 219 | 03126-83201 | 99 | 03320-00290 | 168 | 04710-04135 | 205 |
| 02200-03030 | 220 | 03146-13201 | 98 | 03320-00290 | 169 | 04710-04135 | 221 |
| 02200-03030 | 226 | 03146-13201 | 99 | 03320-00340 | 212 | 04710-04140 | 221 |
| 02200-03030 | 227 | 03190-00006 | 212 | 03320-00340 | 227 | 04710-04145 | 186 |
| 02200-06055 | 98 | 03190-00006 | 212 | 03340-00140 | 168 | 04710-04145 | 205 |
| 02200-06055 | 99 | 03190-00013 | 63 | 03340-00140 | 169 | 04710-04145 | 205 |
| 02200-16010 | 61 | 03192-00012 | 88 | 03350-00750 | 122 | 04710-04145 | 205 |
| 02200-16010 | 129 | 03192-10012 | 88 | 03360-00210 | 226 | 04710-04150 | 221 |
| 02200-16010 | 130 | 03192-30072 | 64 | 04000-00300 | 189 | 04710-04150 | 221 |
| 02200-16010 | 175 | 03211-09501 | 88 | 04112-00202 | 21 | 04710-04150 | 228 |
| 02200-16010 | 176 | 03217-08501 | 98 | 04134-20202 | 136 | 04710-04155 | 221 |
| 02200-16010 | 177 | 03217-08501 | 99 | 04134-20303 | 184 | 04710-04160 | 205 |
| 02200-16010 | 178 | 03300-00160 | 63 | 04134-20404 | 181 | 04710-04160 | 221 |
| 02200-16015 | 129 | 03300-00180 | 63 | 04134-20404 | 183 | 04710-04160 | 228 |
| 02200-16015 | 130 | 03300-00280 | 213 | 04134-20404 | 221 | 04710-04165 | 205 |
| 02200-16015 | 132 | 03300-00280 | 221 | 04134-20404 | 228 | 04710-04165 | 221 |
| 02200-32020 | 136 | 03300-00280 | 228 | 04150-20202 | 97 | 04710-04165 | 228 |
| 02212-06016 | 69 | 03310-00300 | 63 | 04150-20202 | 136 | 04710-04170 | 205 |
| 02212 10020 | 87 | 03320 00110 | 97 | 04150-20202 | 174 | 04710-04170 | 205 |
| 02212-10020 | 92 | 03320-00110 | 136 | 04150-20202 | 174 | 04710-04175 | 205 |
| 02212-12020 | 63 | 03320-00110 | 136 | 04150-20303 | 97 | 04710-04175 | 221 |
| 02212-12020 | 65 | 03320-00110 | 174 | 04150-20404 | 169 | 04710-04175 | 228 |
| 02262-06015 | 61 | 03320-00110 | 174 | 04150-20404 | 174 | 04710-04180 | 205 |
| 02262-06015 | 129 | 03320-00140 | 97 | 04150-20404 | 213 | 04710-04180 | 205 |
| 02262-06015 | 130 | 03320-00140 | 97 | 04150 20404 | 221 | 04710 04180 | 221 |
| 02262-06020 | 61 | 03320-00140 | 97 | 04601-44230 | 221 | 04710-04180 | 228 |
| 02262-06020 | 132 | 03320-00140 | 174 | 04601-44255 | 221 | 04710-04185 | 205 |
| 02262-08025 | 134 | 03320-00140 | 181 | 04601-44279 | 221 | 04710-04185 | 221 |
| 02262-08025 | 135 | 03320-00140 | 183 | 04601-44283 | 228 | 04710-04185 | 228 |
| 02262-08025 | 136 | 03320-00140 | 184 | 04601-44309 | 221 | 04710-04190 | 185 |
| 02262-08045 | 163 | 03320-00140 | 188 | 04601-44312 | 228 | 04710-04190 | 205 |
| 02262-08045 | 164 | 03320-00140 | 205 | 04601-44328 | 221 | 04710-04190 | 221 |
| 02262-08045 | 164 | 03320-00140 | 205 | 04601-44332 | 228 | 04710-04190 | 228 |
| 02262-10030 | 136 | 03320-00140 | 213 | 04601-44353 | 221 | 04710-04195 | 205 |
| 02270-01014 | 205 | 03320-00140 | 213 | 04601-44356 | 228 | 04710-04195 | 205 |
| 02270-01014 | 213 | 03320-00140 | 213 | 04601-44361 | 221 | 04710-04195 | 205 |
| 02270-01014 | 221 | 03320-00140 | 221 | 04601-44364 | 228 | 04710-04200 | 221 |
| 02270-01014 | 228 | 03320-00140 | 221 | 04601-44397 | 221 | 04710-04200 | 228 |
| 02270-04020 | 69 | 03320-00140 | 228 | 04601-44439 | 221 | 04710-04205 | 205 |
| 02270-04035 | 69 | 03320-00140 | 228 | 04601-44482 | 221 | 04710-04205 | 221 |
| 02360-05019 | 70 | 03320-00180 | 168 | 04601-44515 | 221 | 04710-04205 | 221 |
| 02432-01008 | 192 | 03320-00180 | 169 | 04691-02035 | 184 | 04710-04205 | 228 |
| 02432-01008 | 215 | 03320-00180 | 169 | 04691-02035 | 184 | 04710-04205 | 228 |
| 03000-06207 | 64 | 03320-00180 | 169 | 04691-02038 | 184 | 04710-04210 | 205 |

PARTS NUMBER INDEX


| Part No. | Fig.No. | Part No. | Fig.No. | Part No. | Fig.No. | Part No. | Fig.No. |
|---|---|---|---|---|---|---|---|
| 04710-04210 | 221 | 04911-00042 | 180 | 06006-70012 | 105 | 06843-70012 | 114 |
| 04710-04210 | 228 | 04911-00042 | 181 | 06006-70012 | 106 | 06851-55015 | 112 |
| 04710-04215 | 205 | 04911-00042 | 182 | 06006-70012 | 113 | 06851-60009 | 119 |
| 04710-04220 | 205 | 04911-00042 | 183 | 06006-70012 | 113 | 06851-70012 | 107 |
| 04710-04220 | 221 | 04911-00044 | 14 | 06007-55015 | 111 | 06851-70012 | 114 |
| 04710-04225 | 205 | 04911-00044 | 15 | 06007-60009 | 117 | 06851-70012 | 114 |
| 04710-04225 | 221 | 04911-00044 | 180 | 06007-60009 | 118 | 09001-10035 | 211 |
| 04710-04230 | 205 | 04911-00044 | 181 | 06007-70012 | 105 | 09001-10037 | 219 |
| 04710-04230 | 205 | 04911-00044 | 182 | 06007-70012 | 106 | 09001-10039 | 211 |
| 04710-04230 | 205 | 04911-00044 | 183 | 06007-70012 | 113 | 09001-10041 | 211 |
| 04710-04240 | 205 | 04911-00046 | 180 | 06007-70012 | 113 | 09001-10041 | 219 |
| 04710-04245 | 221 | 04911-00046 | 181 | 06701-55015 | 111 | 09001-10045 | 211 |
| 04710-04250 | 205 | 04911-00046 | 182 | 06701-70012 | 103 | 09001-10045 | 211 |
| 04710-04250 | 205 | 04911-00046 | 183 | 06701-70012 | 104 | 09001-10045 | 219 |
| 04710-04250 | 221 | 04911-00050 | 15 | 06701-70012 | 105 | 09001-10047 | 211 |
| 04710-04260 | 205 | 04911-00055 | 8 | 06701-70012 | 106 | 09001-10049 | 220 |
| 04710-04265 | 205 | 04911-00060 | 5 | 06701-70012 | 113 | 09001-10051 | 211 |
| 04710-04265 | 221 | 04911-00060 | 6 | 06701-70012 | 113 | 09001-10051 | 211 |
| 04710-04270 | 221 | 04911-00060 | 7 | 06702-60009 | 115 | 09001-10051 | 219 |
| 04710-04275 | 205 | 04911-00060 | 8 | 06702-60009 | 116 | 09001-10053 | 219 |
| 04710-04280 | 221 | 04911-00070 | 6 | 06702-60009 | 117 | 09001-10053 | 220 |
| 04710-04285 | 205 | 04911-00070 | 8 | 06702-60009 | 118 | 09001-10055 | 211 |
| 04710-04285 | 221 | 04911-00073 | 6 | 06711-55015 | 111 | 09001-10057 | 211 |
| 04710-04295 | 205 | 04911-00073 | 8 | 06711-70012 | 103 | 09001-10057 | 219 |
| 04710-04300 | 205 | 04911-00075 | 5 | 06711-70012 | 104 | 09001-10057 | 220 |
| 04710-04320 | 205 | 04911-00075 | 7 | 06711-70012 | 105 | 09001-10059 | 211 |
| 04710-04330 | 205 | 04911-00090 | 7 | 06711-70012 | 106 | 09001-10059 | 211 |
| 04710-04355 | 205 | 04911-00090 | 8 | 06711-70012 | 113 | 09001-10059 | 219 |
| 04710-06035 | 189 | 04913-10200 | 31 | 06711-70012 | 113 | 09001-10061 | 220 |
| 04901-00100 | 62 | 04913-10200 | 32 | 06712-60009 | 115 | 09001-10065 | 211 |
| 04901-00100 | 190 | 04913-10200 | 33 | 06712-60009 | 116 | 09001-10065 | 219 |
| 04901-00100 | 203 | 04913-10200 | 34 | 06712-60009 | 117 | 09001-10065 | 220 |
| 04901-00100 | 209 | 04913-11100 | 134 | 06712-60009 | 118 | 09001-10069 | 211 |
| 04901-00100 | 217 | 04913-11100 | 135 | 06731-00120 | 111 | 09001-10069 | 220 |
| 04901 00100 | 225 | 04913 11100 | 136 | 06731-00120 | 113 | 09001-10071 | 219 |
| 04901-00190 | 62 | 04913-11200 | 57 | 06804-70012 | 110 | 09001-10071 | 220 |
| 04901-00190 | 98 | 04913-11380 | 125 | 06806-55015 | 112 | 09001-10073 | 211 |
| 04901-00190 | 98 | 04914-00019 | 149 | 06806-60009 | 119 | 09001-10077 | 211 |
| 04901-00190 | 99 | 04914-00019 | 213 | 06806-60009 | 119 | 09001-10077 | 219 |
| 04901-00190 | 99 | 06001-55015 | 111 | 06806-60009 | 120 | 09001-10077 | 220 |
| 04901-00190 | 100 | 06001-60009 | 117 | 06806 70012 | 107 | 09001 10081 | 211 |
| 04901-00190 | 131 | 06001-60009 | 118 | 06806-70012 | 107 | 09001-10083 | 219 |
| 04901-00190 | 132 | 06001-70012 | 105 | 06806-70012 | 108 | 09001-10083 | 220 |
| 04901-00190 | 133 | 06001-70012 | 106 | 06806-70012 | 114 | 09001-10089 | 211 |
| 04901-00191 | 98 | 06001-70012 | 113 | 06806-70012 | 114 | 09001-10089 | 220 |
| 04901-00191 | 99 | 06001-70012 | 113 | 06807-60009 | 119 | 09001-10095 | 220 |
| 04911-00020 | 185 | 06005-55015 | 111 | 06807-60009 | 119 | 09001-10097 | 211 |
| 04911-00021 | 186 | 06005-60009 | 117 | 06807-60009 | 119 | 10A62-50201 | 58 |
| 04911-00021 | 189 | 06005-60009 | 118 | 06807-70012 | 107 | 10A62-50401 | 58 |
| 04911-00021 | 205 | 06005-70012 | 105 | 06807-70012 | 107 | 10A63-10211 | 62 |
| 04911-00021 | 205 | 06005-70012 | 106 | 06807-70012 | 107 | 10A63-42001 | 64 |
| 04911-00021 | 221 | 06005-70012 | 113 | 06841-55015 | 112 | 10A63-42011 | 64 |
| 04911-00021 | 221 | 06005-70012 | 113 | 06841-60009 | 119 | 110F7-12001 | 168 |
| 04911-00022 | 57 | 06006-55015 | 111 | 06841-70012 | 107 | 11243-82081 | 68 |
| 04911-00023 | 188 | 06006-60009 | 115 | 06841-70012 | 114 | 11243-82091 | 68 |
| 04911-00032 | 189 | 06006-60009 | 116 | 06841-70012 | 114 | 11243-82161 | 68 |
| 04911-00040 | 180 | 06006-60009 | 117 | 06843-55015 | 112 | 11243-82181 | 68 |
| 04911-00040 | 181 | 06006-60009 | 118 | 06843-60009 | 119 | 11243-82211 | 68 |
| 04911-00040 | 182 | 06006-70012 | 103 | 06843-70012 | 107 | 115G3-82111 | 65 |
| 04911-00040 | 183 | 06006-70012 | 104 | 06843-70012 | 114 | 115G3-82241 | 65 |

PARTS NUMBER INDEX


| Part No. | Fig.No. | Part No. | Fig.No. | Part No. | Fig.No. | Part No. | Fig.No. |
|---|---|---|---|---|---|---|---|
| 115G3-82251 | 65 | 12N43-42471 | 63 | 12N53-82011 | 65 | 12P43-12061 | 70 |
| 115G3-82351 | 68 | 12N43-42481 | 63 | 12N53-82021 | 65 | 12P43-12081 | 70 |
| 115G3-82361 | 68 | 12N43-42501 | 63 | 12N53-82041 | 65 | 12P43-12111 | 70 |
| 115G3-82671 | 69 | 12N43-42511 | 63 | 12N53-82061 | 62 | 12P43-12141 | 70 |
| 116H3-82101 | 65 | 12N43-42521 | 63 | 12N53-82061 | 65 | 12P43-12301 | 70 |
| 116H3-82101 | 67 | 12N43-42551 | 64 | 12N53-82081 | 65 | 12P43-19801 | 64 |
| 116H3-82101 | 69 | 12N43-42561 | 64 | 12N53-82091 | 67 | 12P43-19801 | 70 |
| 116H3-82201 | 69 | 12N43-42571 | 64 | 12N53-82101 | 68 | 12003-12021 | 62 |
| 118H3-82231 | 69 | 12N43-42581 | 64 | 12N53-82111 | 68 | 12003-42052 | 63 |
| 12A53-22001 | 91 | 12N52-50201 | 59 | 12N53-82131 | 68 | 12003-42061 | 63 |
| 12A53-22011 | 91 | 12N53-22001 | 91 | 12N53-82151 | 67 | 12003-42251 | 64 |
| 12A53-50201 | 90 | 12N53-22011 | 91 | 12N53-82161 | 67 | 12003-42451 | 63 |
| 12A53-50231 | 90 | 12N53-32001 | 89 | 12N53-82171 | 67 | 12003-42461 | 63 |
| 12N42-50201 | 58 | 12N53-32011 | 89 | 12N53-82201 | 64 | 12163-82331 | 65 |
| 12N42-50401 | 58 | 12N53-50201 | 90 | 12N53-82201 | 67 | 12163-82421 | 65 |
| 12N43-10201 | 62 | 12N53-50231 | 90 | 12N53-82211 | 64 | 12163-82541 | 63 |
| 12N43-10211 | 62 | 12N53-50301 | 92 | 12N53-82211 | 67 | 12163-82541 | 65 |
| 12N43-12001 | 62 | 12N53-52031 | 92 | 12N53-82221 | 69 | 12163-82541 | 67 |
| 12N43-12011 | 62 | 12N53-52061 | 92 | 12N53-82231 | 69 | 12163-82541 | 70 |
| 12N43-12021 | 62 | 12N53-52081 | 92 | 12N53-82251 | 69 | 12163-82561 | 66 |
| 12N43-12021 | 70 | 12N53-52091 | 92 | 12N53-82291 | 69 | 124G3-52011 | 92 |
| 12N43-12101 | 62 | 12N53-52101 | 92 | 12N53-82321 | 69 | 124T3-42651 | 90 |
| 12N43-12101 | 70 | 12N53-52111 | 92 | 12N53-82331 | 69 | 124T3-42661 | 90 |
| 12N43-12111 | 62 | 12N53-52121 | 92 | 12N53-82351 | 69 | 124T3-43041 | 20 |
| 12N43-12151 | 62 | 12N53-52131 | 92 | 12N53-82361 | 69 | 130C2-60302 | 78 |
| 12N43-12201 | 62 | 12N53-52141 | 92 | 12N53-82371 | 69 | 131N3-12031 | 70 |
| 12N43-19801 | 62 | 12N53-52151 | 92 | 12N53-82401 | 69 | 131N3-12151 | 70 |
| 12N43-19801 | 64 | 12N53-52161 | 92 | 12N53-82421 | 69 | 134A3-42071 | 64 |
| 12N43-19811 | 63 | 12N53-52171 | 92 | 12N53-82451 | 69 | 134A3-52041 | 92 |
| 12N43-40251 | 64 | 12N53-52181 | 92 | 12N53-82481 | 69 | 134A3-52051 | 92 |
| 12N43-42001 | 63 | 12N53-52191 | 92 | 12N53-82501 | 69 | 134A7-10301 | 168 |
| 12N43-42031 | 63 | 12N53-52201 | 92 | 12N53-82531 | 69 | 134B3-82401 | 68 |
| 12N43-42051 | 64 | 12N53-52211 | 92 | 12N53-82551 | 69 | 134G3-82111 | 68 |
| 12N43-42061 | 64 | 12N53-52221 | 92 | 12N53-82571 | 69 | 134G3-82121 | 68 |
| 12N43 42071 | 64 | 12N53 52231 | 92 | 12N53-82581 | 69 | 134G3-82131 | 68 |
| 12N43-42101 | 64 | 12N53-52241 | 92 | 12N53-82621 | 59 | 134G3-82141 | 68 |
| 12N43-42111 | 64 | 12N53-52251 | 92 | 12N53-82621 | 65 | 134G3-89811 | 68 |
| 12N43-42121 | 64 | 12N53-52271 | 92 | 12N53-82621 | 89 | 134G3-89831 | 68 |
| 12N43-42131 | 64 | 12N53-52291 | 92 | 12N53-82621 | 92 | 134H3-10201 | 70 |
| 12N43-42141 | 64 | 12N53-52341 | 92 | 12N53-82641 | 66 | 134H3-10211 | 70 |
| 12N43-42151 | 64 | 12N53-52351 | 92 | 12N53 82641 | 89 | 134H7 10301 | 169 |
| 12N43-42161 | 64 | 12N53-52381 | 92 | 12N53-82701 | 69 | 135C3-12081 | 62 |
| 12N43-42171 | 64 | 12N53-52431 | 92 | 12N53-82711 | 65 | 139B3-82121 | 69 |
| 12N43-42191 | 64 | 12N53-52441 | 92 | 12N53-82721 | 69 | 14603-52131 | 92 |
| 12N43-42201 | 64 | 12N53-52451 | 92 | 12N53-82731 | 69 | 15573-42021 | 64 |
| 12N43-42211 | 64 | 12N53-52461 | 92 | 12N53-82741 | 69 | 15573-42151 | 63 |
| 12N43-42221 | 64 | 12N53-52471 | 92 | 12N53-82751 | 69 | 15573-42151 | 69 |
| 12N43-42251 | 64 | 12N53-52481 | 92 | 12N53-82761 | 65 | 15573-42151 | 70 |
| 12N43-42261 | 64 | 12N53-52491 | 92 | 12N53-82771 | 69 | 15573-42151 | 87 |
| 12N43-42271 | 64 | 12N53-52501 | 92 | 12N53-82781 | 69 | 15583-82101 | 67 |
| 12N43-42281 | 64 | 12N53-52511 | 92 | 12N53-82791 | 69 | 15583-82411 | 69 |
| 12N43-42291 | 64 | 12N53-59801 | 92 | 12N53-89801 | 65 | 15583-82421 | 69 |
| 12N43-42301 | 64 | 12N53-59811 | 92 | 12N53-89801 | 67 | 15583-82441 | 69 |
| 12N43-42321 | 64 | 12N53-59821 | 92 | 12N53-89811 | 65 | 15583-82451 | 69 |
| 12N43-42351 | 64 | 12N53-80201 | 68 | 12N53-89831 | 69 | 15583-82461 | 69 |
| 12N43-42401 | 63 | 12N53-80301 | 65 | 12P42-50201 | 60 | 15583-82521 | 65 |
| 12N43-42411 | 63 | 12N53-80311 | 65 | 12P43-12011 | 70 | 15583-82521 | 67 |
| 12N43-42421 | 63 | 12N53-80321 | 66 | 12P43-12021 | 70 | 15583-82571 | 67 |
| 12N43-42431 | 63 | 12N53-80341 | 69 | 12P43-12031 | 70 | 15943-82701 | 70 |
| 12N43-42441 | 63 | 12N53-82001 | 65 | 12P43-12051 | 70 | 15943-83261 | 65 |

PARTS NUMBER INDEX


| Part No. | Fig.No. | Part No. | Fig.No. | Part No. | Fig.No. | Part No. | Fig.No. |
|---|---|---|---|---|---|---|---|
| 16113-52121 | 92 | 21152-42091 | 33 | 214A0-51791 | 212 | 214A2-42611 | 83 |
| 16113-52141 | 92 | 21152-42091 | 34 | 214A0-51801 | 212 | 214A2-42611 | 84 |
| 16402-54331 | 75 | 21152-42091 | 84 | 214A0-51811 | 212 | 214A2-42611 | 84 |
| 16402-54331 | 79 | 21152-42091 | 84 | 214A0-51821 | 212 | 214A2-42611 | 85 |
| 16402-54331 | 80 | 21152-42091 | 86 | 214A0-51831 | 212 | 214A2-42611 | 85 |
| 16402-54331 | 81 | 21152-42091 | 86 | 214A0-51841 | 212 | 214A2-42611 | 86 |
| 19502-52552 | 70 | 212T0-50501 | 211 | 214A0-51851 | 212 | 214A2-42611 | 86 |
| 20A71-02101 | 5 | 212T0-50511 | 211 | 214A0-51861 | 212 | 214A2-42621 | 79 |
| 20A71-02101 | 7 | 212T0-50521 | 211 | 214A0-51871 | 212 | 214A2-42621 | 80 |
| 205A2-63311 | 78 | 212T0-50531 | 211 | 214A0-51881 | 212 | 214A2-42621 | 81 |
| 209K2-40501 | 30 | 212T0-50541 | 211 | 214A0-53681 | 212 | 214A2-44001 | 55 |
| 209K2-42002 | 42 | 212T0-50551 | 211 | 214A0-53681 | 212 | 214A2-52002 | 61 |
| 209K2-42002 | 43 | 212T0-50561 | 211 | 214A0-53721 | 212 | 214A2-52012 | 61 |
| 209K2-42002 | 43 | 212T0-50571 | 211 | 214A0-53901 | 212 | 214A3-02011 | 88 |
| 209K2-42002 | 43 | 212T0-50581 | 211 | 214A0-53901 | 212 | 214A4-12161 | 94 |
| 209K2-42021 | 42 | 212T0-50591 | 211 | 214A0-53901 | 212 | 214A4-32041 | 98 |
| 209K2-42021 | 43 | 212T0-50601 | 211 | 214A0-53901 | 212 | 214A4-32041 | 99 |
| 209K2-42021 | 43 | 212T0-50611 | 211 | 214A0-59821 | 212 | 214A4-32051 | 98 |
| 209K2-42021 | 43 | 212T0-50621 | 211 | 214A0-59821 | 212 | 214A4-32051 | 99 |
| 209K2-42041 | 42 | 212T0-50631 | 211 | 214A0-62151 | 213 | 214A4-32161 | 98 |
| 209K2-42041 | 43 | 212T0-50641 | 211 | 214A0-72701 | 217 | 214A4-32161 | 99 |
| 209K2-42041 | 43 | 212T0-80501 | 219 | 214A0-72701 | 225 | 214A4-32201 | 100 |
| 209K2-42041 | 43 | 212T0-80511 | 219 | 214A0-82681 | 211 | 214A4-32211 | 100 |
| 209K2-42351 | 31 | 212T0-80521 | 219 | 214A0-82681 | 219 | 214A5-22001 | 129 |
| 209K2-42351 | 32 | 212T0-80531 | 219 | 214A0-82831 | 203 | 214A5-22001 | 130 |
| 209K2-42351 | 33 | 212T0-80541 | 219 | 214A0-82831 | 211 | 214A5-32312 | 134 |
| 209K2-42351 | 34 | 212T0-80551 | 219 | 214A0-82831 | 219 | 214A5-32312 | 144 |
| 209K2-42351 | 72 | 212T0-80561 | 211 | 214A0-93001 | 215 | 214A5-33012 | 144 |
| 209K2-42351 | 83 | 212T0-80561 | 219 | 214A0-93011 | 215 | 214A5-33031 | 144 |
| 209K2-42351 | 83 | 212T0-80571 | 219 | 214A0-93031 | 215 | 214A5-33041 | 144 |
| 209K2-42351 | 84 | 212T0-80581 | 219 | 214A0-93041 | 215 | 214A5-33052 | 144 |
| 209K2-42351 | 84 | 212T0-80591 | 219 | 214A0-93201 | 215 | 214A5-33062 | 144 |
| 209K2-42351 | 85 | 212T0-80601 | 219 | 214A0-93211 | 215 | 214A5-53012 | 193 |
| 209K2-42351 | 85 | 212T0-82001 | 211 | 214A0-93231 | 215 | 214A6-42252 | 56 |
| 209K2 42351 | 86 | 212T0 82001 | 219 | 214A0-93241 | 215 | 214A6-42252 | 126 |
| 209K2-42351 | 86 | 212T0-82101 | 211 | 214A2-12001 | 13 | 214A6-42771 | 159 |
| 209K2-43001 | 160 | 212T0-82101 | 219 | 214A2-12001 | 19 | 214A6-42771 | 159 |
| 209K2-43001 | 161 | 212T2-42311 | 39 | 214A2-12021 | 13 | 214A6-42781 | 165 |
| 209K2-43001 | 162 | 21232-32551 | 19 | 214A2-12111 | 13 | 214A6-42781 | 165 |
| 209P6-42831 | 16 | 21232-32551 | 21 | 214A2-12121 | 13 | 214A7-42071 | 61 |
| 209P6-42831 | 159 | 21232-32551 | 23 | 214A2 12141 | 13 | 214A7 42071 | 61 |
| 209P6-42831 | 159 | 21232-32551 | 24 | 214A2-12141 | 13 | 214A7-42071 | 175 |
| 209P6-42831 | 163 | 21232-32551 | 25 | 214A2-12201 | 13 | 214A7-42071 | 175 |
| 209P6-42831 | 164 | 21237-52051 | 147 | 214A2-12201 | 13 | 214A7-42071 | 176 |
| 209P6-42831 | 164 | 21237-52051 | 147 | 214A2-13001 | 13 | 214A7-42071 | 176 |
| 209P7-62151 | 136 | 21237-52062 | 147 | 214A2-13001 | 13 | 214A7-42071 | 176 |
| 209P7-62531 | 188 | 21237-52062 | 147 | 214A2-13011 | 13 | 214A7-42071 | 177 |
| 210F2-42021 | 42 | 21239-12501 | 193 | 214A2-13011 | 13 | 214A7-42071 | 177 |
| 210F2-42021 | 43 | 213L2-52001 | 60 | 214A2-42331 | 9 | 214A7-42071 | 177 |
| 210F2-42021 | 43 | 213T1-02011 | 3 | 214A2-42331 | 10 | 214A7-42071 | 177 |
| 210F2-42021 | 43 | 213T1-02021 | 3 | 214A2-42331 | 132 | 214A7-42071 | 178 |
| 210F2-42031 | 42 | 214A0-51701 | 212 | 214A2-42611 | 13 | 214A7-42071 | 178 |
| 210F2-42031 | 43 | 214A0-51711 | 212 | 214A2-42611 | 31 | 214A7-42071 | 178 |
| 210F2-42031 | 43 | 214A0-51721 | 212 | 214A2-42611 | 32 | 214A7-42071 | 178 |
| 210F2-42031 | 43 | 214A0-51731 | 212 | 214A2-42611 | 33 | 214A7-42071 | 178 |
| 210F8-42631 | 212 | 214A0-51741 | 212 | 214A2-42611 | 34 | 214A7-42181 | 179 |
| 210F8-42631 | 212 | 214A0-51751 | 212 | 214A2-42611 | 52 | 214A7-42181 | 179 |
| 21152-22151 | 17 | 214A0-51761 | 212 | 214A2-42611 | 54 | 214A7-42181 | 179 |
| 21152-42091 | 31 | 214A0-51771 | 212 | 214A2-42611 | 82 | 214A7-42181 | 179 |
| 21152-42091 | 32 | 214A0-51781 | 212 | 214A2-42611 | 83 | 214A7-42191 | 179 |

PARTS NUMBER INDEX


| Part No. | Fig.No. | Part No. | Fig.No. | Part No. | Fig.No. | Part No. | Fig.No. |
|---|---|---|---|---|---|---|---|
| 214A7-42201 | 179 | 214A8-10642 | 206 | 214T0-83541 | 226 | 216G2-43542 | 48 |
| 214A8-02201 | 203 | 214A8-10642 | 214 | 215E4-32341 | 98 | 216G2-43542 | 49 |
| 214A8-02201 | 209 | 214A8-10642 | 222 | 215E4-32341 | 99 | 216G2-43542 | 50 |
| 214A8-02201 | 217 | 214A8-10653 | 200 | 215E4-39801 | 98 | 216G2-43551 | 41 |
| 214A8-02201 | 225 | 214A8-10653 | 206 | 215E4-52231 | 122 | 216G2-43551 | 48 |
| 214A8-10512 | 200 | 214A8-10653 | 214 | 215E8-42171 | 220 | 216G2-43551 | 49 |
| 214A8-10512 | 200 | 214A8-10653 | 222 | 215E8-42171 | 220 | 216G2-43551 | 50 |
| 214A8-10512 | 206 | 214A8-10663 | 200 | 215E8-42181 | 220 | 216G2-43562 | 41 |
| 214A8-10512 | 206 | 214A8-10663 | 206 | 215E8-42181 | 220 | 216G2-43562 | 48 |
| 214A8-10512 | 206 | 214A8-10663 | 214 | 216G0-93101 | 221 | 216G2-43562 | 49 |
| 214A8-10512 | 214 | 214A8-10663 | 222 | 216G0-93101 | 228 | 216G2-43562 | 50 |
| 214A8-10512 | 214 | 214A8-10673 | 200 | 216G0-93151 | 221 | 216G2-43571 | 41 |
| 214A8-10512 | 222 | 214A8-10673 | 206 | 216G1-02451 | 3 | 216G2-43571 | 48 |
| 214A8-10512 | 222 | 214A8-10673 | 214 | 216G1-02461 | 3 | 216G2-43571 | 49 |
| 214A8-10512 | 222 | 214A8-10673 | 222 | 216G1-02471 | 3 | 216G2-43571 | 50 |
| 214A8-10522 | 200 | 214A8-10683 | 200 | 216G1-02481 | 3 | 216G2-43582 | 41 |
| 214A8-10522 | 206 | 214A8-10683 | 206 | 216G1-02491 | 3 | 216G2-43582 | 48 |
| 214A8-10522 | 214 | 214A8-10683 | 214 | 216G1-02501 | 3 | 216G2-43582 | 49 |
| 214A8-10522 | 222 | 214A8-10683 | 222 | 216G2-22051 | 17 | 216G2-43582 | 50 |
| 214A8-10532 | 200 | 214A8-11001 | 200 | 216G2-22051 | 18 | 216G2-43592 | 41 |
| 214A8-10532 | 206 | 214A8-11001 | 206 | 216G2-40602 | 41 | 216G2-43592 | 48 |
| 214A8-10532 | 214 | 214A8-11001 | 214 | 216G2-40602 | 48 | 216G2-43592 | 49 |
| 214A8-10532 | 222 | 214A8-11001 | 222 | 216G2-40602 | 49 | 216G2-43592 | 50 |
| 214A8-10542 | 200 | 214A8-12001 | 200 | 216G2-40602 | 50 | 216G2-43602 | 41 |
| 214A8-10542 | 206 | 214A8-12001 | 206 | 216G2-40701 | 41 | 216G2-43602 | 48 |
| 214A8-10542 | 214 | 214A8-12001 | 214 | 216G2-40711 | 41 | 216G2-43602 | 49 |
| 214A8-10542 | 222 | 214A8-12001 | 222 | 216G2-40721 | 41 | 216G2-43602 | 50 |
| 214A8-10552 | 200 | 214A8-12011 | 200 | 216G2-40731 | 41 | 216G2-43611 | 41 |
| 214A8-10552 | 206 | 214A8-12011 | 206 | 216G2-42071 | 39 | 216G2-43611 | 48 |
| 214A8-10552 | 214 | 214A8-12011 | 214 | 216G2-42311 | 31 | 216G2-43611 | 49 |
| 214A8-10552 | 222 | 214A8-12011 | 222 | 216G2-42311 | 32 | 216G2-43611 | 50 |
| 214A8-10563 | 200 | 214A8-12021 | 200 | 216G2-42311 | 33 | 216G2-43622 | 41 |
| 214A8-10563 | 206 | 214A8-12021 | 206 | 216G2-42311 | 34 | 216G2-43622 | 48 |
| 214A8-10563 | 214 | 214A8-12021 | 214 | 216G2-42321 | 31 | 216G2-43622 | 49 |
| 214A8 10563 | 222 | 214A8 12021 | 222 | 216G2-42321 | 32 | 216G2-43622 | 50 |
| 214A8-10582 | 200 | 214A8-12031 | 200 | 216G2-42321 | 33 | 216G2-43631 | 41 |
| 214A8-10582 | 206 | 214A8-12031 | 206 | 216G2-42321 | 34 | 216G2-43631 | 48 |
| 214A8-10582 | 214 | 214A8-12031 | 214 | 216G2-43111 | 39 | 216G2-43631 | 49 |
| 214A8-10582 | 222 | 214A8-12031 | 222 | 216G2-43111 | 40 | 216G2-43631 | 50 |
| 214A8-10592 | 200 | 214A8-42661 | 204 | 216G2-43401 | 31 | 216G2-43651 | 31 |
| 214A8-10592 | 206 | 214A8-42661 | 212 | 216G2 43401 | 32 | 216G2 43651 | 32 |
| 214A8-10592 | 214 | 214A8-42661 | 220 | 216G2-43401 | 33 | 216G2-43651 | 33 |
| 214A8-10592 | 222 | 214A8-42661 | 226 | 216G2-43401 | 34 | 216G2-43651 | 34 |
| 214A8-10602 | 200 | 214A8-42661 | 227 | 216G2-43411 | 31 | 216G2-43711 | 31 |
| 214A8-10602 | 206 | 214A8-42721 | 227 | 216G2-43411 | 32 | 216G2-43711 | 32 |
| 214A8-10602 | 214 | 214A8-44151 | 205 | 216G2-43411 | 33 | 216G2-43711 | 33 |
| 214A8-10602 | 222 | 214A8-44151 | 213 | 216G2-43411 | 34 | 216G2-43711 | 34 |
| 214A8-10612 | 200 | 214A8-44151 | 221 | 216G2-43421 | 31 | 216G4-12101 | 94 |
| 214A8-10612 | 206 | 214A8-44151 | 228 | 216G2-43421 | 32 | 216G4-12111 | 94 |
| 214A8-10612 | 214 | 214A8-46001 | 227 | 216G2-43421 | 33 | 216G5-32201 | 141 |
| 214A8-10612 | 222 | 214A8-52051 | 98 | 216G2-43421 | 34 | 216G5-32331 | 141 |
| 214A8-10622 | 200 | 214A8-52051 | 122 | 216G2-43502 | 41 | 216G5-32341 | 141 |
| 214A8-10622 | 206 | 214A9-20101 | 199 | 216G2-43502 | 48 | 216G5-42011 | 134 |
| 214A8-10622 | 214 | 214A9-20101 | 199 | 216G2-43502 | 49 | 216G6-42451 | 155 |
| 214A8-10622 | 222 | 214J8-42721 | 226 | 216G2-43502 | 50 | 216G6-42481 | 155 |
| 214A8-10632 | 200 | 214J8-46001 | 226 | 216G2-43531 | 41 | 216G6-42541 | 155 |
| 214A8-10632 | 206 | 214T0-83501 | 226 | 216G2-43531 | 48 | 216G6-42921 | 157 |
| 214A8-10632 | 214 | 214T0-83511 | 226 | 216G2-43531 | 49 | 216G6-42931 | 157 |
| 214A8-10632 | 222 | 214T0-83521 | 226 | 216G2-43531 | 50 | 216G6-43561 | 154 |
| 214A8-10642 | 200 | 214T0-83531 | 226 | 216G2-43542 | 41 | 216G6-52161 | 158 |

PARTS NUMBER INDEX


| Part No. | Fig.No. | Part No. | Fig.No. | Part No. | Fig.No. | Part No. | Fig.No. |
|---|---|---|---|---|---|---|---|
| 216G6-52291 | 155 | 216H3-92171 | 164 | 22N40-70401 | 225 | 22N50-40221 | 209 |
| 216G6-52291 | 158 | 216H3-92281 | 159 | 22N40-70431 | 225 | 22N50-40231 | 209 |
| 216G6-52291 | 163 | 216H3-92281 | 159 | 22N40-70441 | 225 | 22N50-40241 | 209 |
| 216G6-52291 | 164 | 216H3-92281 | 159 | 22N40-70451 | 225 | 22N50-40251 | 209 |
| 216G6-52291 | 164 | 216H3-92281 | 159 | 22N40-70461 | 225 | 22N50-40261 | 209 |
| 216G7-32021 | 170 | 216H5-42141 | 155 | 22N40-70601 | 225 | 22N50-40271 | 209 |
| 216G7-32021 | 171 | 216H7-82111 | 188 | 22N40-70631 | 225 | 22N50-40281 | 209 |
| 216G7-32021 | 172 | 216M7-62101 | 168 | 22N40-70641 | 225 | 22N50-40291 | 209 |
| 216G7-32021 | 173 | 217G2-32001 | 19 | 22N40-70651 | 225 | 22N50-40301 | 209 |
| 216G7-52051 | 148 | 217G2-32001 | 20 | 22N40-70661 | 225 | 22N50-40311 | 209 |
| 216G7-52201 | 149 | 217G2-42021 | 39 | 22N40-72191 | 225 | 22N50-40321 | 209 |
| 216G8-12101 | 200 | 217G2-42021 | 40 | 22N40-72311 | 226 | 22N50-40331 | 209 |
| 216G8-12101 | 206 | 217G2-42051 | 39 | 22N40-74301 | 226 | 22N50-40341 | 209 |
| 216G8-12101 | 214 | 217W2-10001 | 189 | 22N40-74311 | 226 | 22N50-40351 | 209 |
| 216G8-12101 | 222 | 22A09-12101 | 192 | 22N40-74501 | 226 | 22N50-40361 | 209 |
| 216G8-12921 | 200 | 22B42-42212 | 35 | 22N40-80261 | 226 | 22N50-40371 | 209 |
| 216G8-12921 | 206 | 22B51-00101 | 1 | 22N40-80461 | 226 | 22N50-40381 | 209 |
| 216G8-12921 | 214 | 22B51-00201 | 1 | 22N40-80661 | 226 | 22N50-40401 | 209 |
| 216G8-12921 | 222 | 22B51-00211 | 1 | 22N40-81001 | 228 | 22N50-40411 | 209 |
| 216G8-33351 | 217 | 22B51-02001 | 3 | 22N40-81091 | 228 | 22N50-40421 | 209 |
| 216G8-33351 | 225 | 22B51-02201 | 5 | 22N40-82201 | 228 | 22N50-40431 | 209 |
| 216G8-33361 | 203 | 22B51-02601 | 5 | 22N40-82221 | 228 | 22N50-40441 | 209 |
| 216G8-33361 | 209 | 22B52-12001 | 14 | 22N40-82251 | 228 | 22N50-40451 | 209 |
| 216G8-33361 | 217 | 22B52-12011 | 14 | 22N40-82801 | 228 | 22N50-40461 | 209 |
| 216G8-33361 | 217 | 22B52-12201 | 11 | 22N40-90201 | 223 | 22N50-40471 | 209 |
| 216G8-33361 | 225 | 22B52-22101 | 150 | 22N41-00201 | 1 | 22N50-40481 | 209 |
| 216G8-33361 | 225 | 22B52-30111 | 23 | 22N41-00201 | 2 | 22N50-40491 | 209 |
| 216G8-33371 | 203 | 22B52-40301 | 26 | 22N42-42201 | 27 | 22N50-40501 | 209 |
| 216G8-33371 | 209 | 22B52-42111 | 39 | 22N42-42212 | 37 | 22N50-40511 | 209 |
| 216G8-33371 | 217 | 22B52-42212 | 36 | 22N43-90201 | 61 | 22N50-40521 | 209 |
| 216G8-33371 | 217 | 22B52-42221 | 39 | 22N43-90211 | 61 | 22N50-40531 | 209 |
| 216G8-33371 | 225 | 22B55-22011 | 129 | 22N43-90301 | 61 | 22N50-40541 | 209 |
| 216G8-33371 | 225 | 22B57-62001 | 180 | 22N43-90511 | 61 | 22N50-40551 | 209 |
| 216G8-33401 | 203 | 22C41-00101 | 1 | 22N43-92201 | 61 | 22N50-40561 | 209 |
| 216G8 33401 | 209 | 22C42 12201 | 11 | 22N43-92301 | 61 | 22N50-40571 | 209 |
| 216G8-33401 | 217 | 22C47-62001 | 181 | 22N43-92701 | 61 | 22N50-40581 | 209 |
| 216G8-33401 | 225 | 22C47-62101 | 181 | 22N43-92711 | 61 | 22N50-50511 | 211 |
| 216G8-52301 | 203 | 22N19-12151 | 192 | 22N43-92731 | 61 | 22N50-50521 | 211 |
| 216G8-52301 | 209 | 22N19-12161 | 192 | 22N43-92901 | 61 | 22N50-50531 | 211 |
| 216G8-52301 | 217 | 22N19-12171 | 192 | 22N43-92911 | 61 | 22N50-60201 | 207 |
| 216G8-52301 | 225 | 22N19-12181 | 192 | 22N43 93001 | 61 | 22N50 70201 | 217 |
| 216G8-53001 | 191 | 22N19-12281 | 192 | 22N43-93011 | 61 | 22N50-70211 | 217 |
| 216G8-53011 | 191 | 22N19-12601 | 192 | 22N43-93021 | 61 | 22N50-70221 | 217 |
| 216G9-12052 | 193 | 22N40-50201 | 226 | 22N43-93031 | 61 | 22N50-70231 | 217 |
| 216G9-12062 | 193 | 22N40-50221 | 226 | 22N45-30303 | 131 | 22N50-70241 | 217 |
| 216G9-12071 | 193 | 22N40-50231 | 226 | 22N45-32101 | 137 | 22N50-70251 | 217 |
| 216G9-12071 | 194 | 22N40-50261 | 226 | 22N45-32151 | 134 | 22N50-70261 | 217 |
| 216G9-12071 | 195 | 22N40-50401 | 226 | 22N45-32161 | 134 | 22N50-70271 | 217 |
| 216G9-12071 | 196 | 22N40-50421 | 226 | 22N45-32201 | 134 | 22N50-70281 | 217 |
| 216G9-12071 | 197 | 22N40-50431 | 226 | 22N45-40202 | 131 | 22N50-70291 | 217 |
| 216G9-12071 | 198 | 22N40-50461 | 226 | 22N45-40302 | 131 | 22N50-70301 | 217 |
| 216G9-12131 | 193 | 22N40-50601 | 226 | 22N45-40302 | 133 | 22N50-70401 | 217 |
| 216G9-12131 | 194 | 22N40-50621 | 226 | 22N45-42101 | 131 | 22N50-70411 | 217 |
| 216G9-12131 | 195 | 22N40-50631 | 226 | 22N45-42131 | 137 | 22N50-70421 | 217 |
| 216G9-12131 | 196 | 22N40-50661 | 226 | 22N45-42701 | 137 | 22N50-70431 | 217 |
| 216G9-12131 | 197 | 22N40-70201 | 225 | 22N45-42701 | 139 | 22N50-70441 | 217 |
| 216G9-12131 | 198 | 22N40-70231 | 225 | 22N45-42801 | 137 | 22N50-70451 | 217 |
| 216H3-92171 | 155 | 22N40-70241 | 225 | 22N45-42801 | 139 | 22N50-70461 | 217 |
| 216H3-92171 | 163 | 22N40-70251 | 225 | 22N50-40201 | 209 | 22N50-70471 | 217 |
| 216H3-92171 | 164 | 22N40-70261 | 225 | 22N50-40211 | 209 | 22N50-70481 | 217 |

PARTS NUMBER INDEX


| Part No. | Fig.No. | Part No. | Fig.No. | Part No. | Fig.No. | Part No. | Fig.No. |
|---|---|---|---|---|---|---|---|
| 22N50-70491 | 217 | 22N52-42031 | 33 | 22N54-30122 | 98 | 22N55-22031 | 129 |
| 22N50-70501 | 217 | 22N52-42031 | 34 | 22N54-32131 | 98 | 22N55-22031 | 130 |
| 22N50-70601 | 217 | 22N52-42101 | 31 | 22N54-32131 | 99 | 22N55-22121 | 129 |
| 22N50-70611 | 217 | 22N52-42101 | 32 | 22N54-32151 | 98 | 22N55-22121 | 130 |
| 22N50-70621 | 217 | 22N52-42101 | 33 | 22N54-32151 | 99 | 22N55-22131 | 129 |
| 22N50-70631 | 217 | 22N52-42101 | 34 | 22N54-32181 | 98 | 22N55-22131 | 130 |
| 22N50-70641 | 217 | 22N52-42111 | 39 | 22N54-32181 | 99 | 22N55-22201 | 130 |
| 22N50-70651 | 217 | 22N52-42111 | 40 | 22N54-32201 | 98 | 22N55-40202 | 132 |
| 22N50-70661 | 217 | 22N52-42201 | 28 | 22N54-32211 | 98 | 22N55-40302 | 132 |
| 22N50-70671 | 217 | 22N52-42212 | 38 | 22N54-32221 | 98 | 22N55-40402 | 132 |
| 22N50-70681 | 217 | 22N52-42221 | 40 | 22N54-32231 | 98 | 22N55-42101 | 132 |
| 22N50-70691 | 217 | 22N52-42251 | 42 | 22N54-32241 | 98 | 22N55-42141 | 134 |
| 22N50-70701 | 217 | 22N52-42301 | 39 | 22N54-32311 | 100 | 22N55-42141 | 135 |
| 22N50-73191 | 221 | 22N52-42301 | 40 | 22N54-32321 | 100 | 22N55-42141 | 136 |
| 22N50-81601 | 220 | 22N52-42311 | 31 | 22N54-32351 | 98 | 22N55-42171 | 137 |
| 22N50-81611 | 220 | 22N52-42311 | 32 | 22N54-32351 | 99 | 22N55-42171 | 138 |
| 22N50-81621 | 220 | 22N52-42311 | 33 | 22N54-32361 | 98 | 22N55-42171 | 139 |
| 22N50-81631 | 220 | 22N52-42311 | 34 | 22N54-32361 | 99 | 22N55-42601 | 132 |
| 22N50-81641 | 220 | 22N52-42321 | 31 | 22N54-32401 | 98 | 22N55-42702 | 138 |
| 22N50-81651 | 220 | 22N52-42321 | 32 | 22N54-32401 | 99 | 22N55-42802 | 138 |
| 22N50-81661 | 220 | 22N52-42321 | 33 | 22N54-32402 | 98 | 22N55-50101 | 146 |
| 22N50-81671 | 220 | 22N52-42321 | 34 | 22N54-32402 | 99 | 22N56-32041 | 152 |
| 22N50-81681 | 220 | 22N52-42331 | 31 | 22N54-32481 | 98 | 22N56-40101 | 154 |
| 22N50-81691 | 220 | 22N52-42331 | 32 | 22N54-32481 | 99 | 22N56-40202 | 155 |
| 22N50-81701 | 220 | 22N52-42331 | 33 | 22N54-32501 | 98 | 22N56-40252 | 163 |
| 22N50-90101 | 215 | 22N52-42331 | 34 | 22N54-32501 | 99 | 22N56-40262 | 163 |
| 22N50-92101 | 221 | 22N52-42501 | 26 | 22N54-32511 | 98 | 22N56-40272 | 163 |
| 22N50-92101 | 228 | 22N52-42511 | 26 | 22N54-32511 | 99 | 22N56-40272 | 164 |
| 22N51-00101 | 2 | 22N52-42951 | 33 | 22N54-32801 | 98 | 22N56-40272 | 164 |
| 22N51-00161 | 1 | 22N52-42951 | 34 | 22N54-32941 | 98 | 22N56-40302 | 156 |
| 22N51-00161 | 2 | 22N52-43001 | 33 | 22N54-32941 | 99 | 22N56-40361 | 155 |
| 22N51-00201 | 1 | 22N52-43001 | 34 | 22N54-32971 | 98 | 22N56-40371 | 156 |
| 22N51-00201 | 2 | 22N53-00302 | 87 | 22N54-32971 | 99 | 22N56-40401 | 156 |
| 22N51-00211 | 1 | 22N53-00602 | 87 | 22N54-50201 | 122 | 22N56-40411 | 163 |
| 22N51 00211 | 2 | 22N53 00612 | 87 | 22N54-50221 | 122 | 22N56-40421 | 163 |
| 22N51-00301 | 6 | 22N53-02001 | 88 | 22N54-52001 | 122 | 22N56-40451 | 155 |
| 22N51-00301 | 8 | 22N53-02071 | 88 | 22N54-52101 | 122 | 22N56-40461 | 155 |
| 22N51-00401 | 2 | 22N53-02151 | 87 | 22N54-52121 | 122 | 22N56-40471 | 155 |
| 22N51-00411 | 2 | 22N53-02201 | 93 | 22N54-52141 | 122 | 22N56-42041 | 154 |
| 22N51-00601 | 6 | 22N53-02212 | 93 | 22N54-52151 | 122 | 22N56-42602 | 157 |
| 22N51-02001 | 4 | 22N53-02601 | 87 | 22N54 52201 | 122 | 22N56 42612 | 157 |
| 22N51-02201 | 6 | 22N53-02611 | 87 | 22N54-52251 | 122 | 22N56-42701 | 160 |
| 22N51-02251 | 6 | 22N53-70101 | 93 | 22N54-59801 | 122 | 22N56-42701 | 161 |
| 22N51-02251 | 8 | 22N53-70201 | 93 | 22N55-10161 | 123 | 22N56-42701 | 162 |
| 22N52-12001 | 15 | 22N54-10201 | 94 | 22N55-12271 | 124 | 22N56-42711 | 165 |
| 22N52-12201 | 12 | 22N54-10301 | 95 | 22N55-12281 | 124 | 22N56-42721 | 165 |
| 22N52-22101 | 151 | 22N54-10311 | 95 | 22N55-12571 | 125 | 22N56-42731 | 160 |
| 22N52-22201 | 148 | 22N54-12011 | 94 | 22N55-12701 | 126 | 22N56-42731 | 161 |
| 22N52-22201 | 150 | 22N54-12021 | 94 | 22N55-12711 | 126 | 22N56-42731 | 162 |
| 22N52-22201 | 151 | 22N54-12022 | 94 | 22N55-12721 | 126 | 22N56-42741 | 160 |
| 22N52-30101 | 19 | 22N54-12201 | 160 | 22N55-12901 | 128 | 22N56-42741 | 161 |
| 22N52-30111 | 24 | 22N54-12201 | 161 | 22N55-13181 | 123 | 22N56-42741 | 162 |
| 22N52-32021 | 23 | 22N54-12201 | 162 | 22N55-13181 | 154 | 22N56-42751 | 160 |
| 22N52-32021 | 24 | 22N54-12311 | 160 | 22N55-13191 | 123 | 22N56-42751 | 161 |
| 22N52-32021 | 25 | 22N54-12311 | 161 | 22N55-20201 | 129 | 22N56-42751 | 162 |
| 22N52-40301 | 26 | 22N54-12321 | 160 | 22N55-20201 | 130 | 22N56-42761 | 165 |
| 22N52-42021 | 31 | 22N54-12321 | 161 | 22N55-20211 | 129 | 22N56-42771 | 161 |
| 22N52-42021 | 32 | 22N54-30101 | 98 | 22N55-20211 | 130 | 22N56-42771 | 162 |
| 22N52-42021 | 33 | 22N54-30102 | 98 | 22N55-22011 | 129 | 22N56-42791 | 160 |
| 22N52-42021 | 34 | 22N54-30121 | 98 | 22N55-22011 | 130 | 22N56-42791 | 161 |

PARTS NUMBER INDEX


| Part No. | Fig.No. | Part No. | Fig.No. | Part No. | Fig.No. | Part No. | Fig.No. |
|---|---|---|---|---|---|---|---|
| 22N56-42791 | 162 | 22N57-30331 | 171 | 22N57-62201 | 182 | 22N58-30411 | 203 |
| 22N56-42811 | 165 | 22N57-30341 | 172 | 22N57-62201 | 183 | 22N58-30411 | 203 |
| 22N56-42811 | 165 | 22N57-30341 | 172 | 22N57-62221 | 187 | 22N58-30421 | 203 |
| 22N56-42851 | 165 | 22N57-30351 | 173 | 22N57-62381 | 184 | 22N58-30421 | 203 |
| 22N56-42861 | 160 | 22N57-30351 | 173 | 22N57-62391 | 184 | 22N58-30431 | 203 |
| 22N56-42861 | 161 | 22N57-32041 | 170 | 22N57-62401 | 187 | 22N58-30431 | 203 |
| 22N56-42861 | 162 | 22N57-32041 | 171 | 22N57-62451 | 187 | 22N58-30441 | 203 |
| 22N56-42901 | 159 | 22N57-32041 | 172 | 22N57-62531 | 187 | 22N58-30441 | 203 |
| 22N56-42911 | 159 | 22N57-32041 | 173 | 22N57-62801 | 184 | 22N58-30451 | 203 |
| 22N56-43021 | 165 | 22N57-40011 | 175 | 22N57-63001 | 180 | 22N58-30451 | 203 |
| 22N56-43021 | 165 | 22N57-40011 | 176 | 22N57-63001 | 182 | 22N58-30461 | 203 |
| 22N56-43021 | 165 | 22N57-40011 | 177 | 22N57-63011 | 174 | 22N58-30471 | 203 |
| 22N56-43021 | 165 | 22N57-40011 | 178 | 22N57-80201 | 188 | 22N58-30481 | 203 |
| 22N56-43031 | 165 | 22N57-40021 | 175 | 22N57-82001 | 188 | 22N58-30491 | 203 |
| 22N56-43041 | 155 | 22N57-40021 | 176 | 22N57-82101 | 188 | 22N58-30501 | 203 |
| 22N56-43051 | 155 | 22N57-40021 | 177 | 22N57-82111 | 188 | 22N58-30511 | 203 |
| 22N56-43221 | 155 | 22N57-40021 | 178 | 22N58-10501 | 200 | 22N58-30521 | 203 |
| 22N56-43251 | 163 | 22N57-40031 | 176 | 22N58-10501 | 206 | 22N58-30531 | 203 |
| 22N56-43251 | 164 | 22N57-40031 | 177 | 22N58-10501 | 214 | 22N58-30541 | 203 |
| 22N56-43251 | 164 | 22N57-40031 | 178 | 22N58-10501 | 222 | 22N58-30551 | 203 |
| 22N56-43271 | 155 | 22N57-40041 | 177 | 22N58-10511 | 200 | 22N58-30561 | 203 |
| 22N56-43281 | 155 | 22N57-40041 | 178 | 22N58-10511 | 206 | 22N58-30571 | 203 |
| 22N56-43411 | 165 | 22N57-40051 | 178 | 22N58-10511 | 214 | 22N58-30581 | 203 |
| 22N56-43421 | 165 | 22N57-42001 | 175 | 22N58-10511 | 222 | 22N58-30591 | 203 |
| 22N56-43421 | 165 | 22N57-42001 | 176 | 22N58-10521 | 200 | 22N58-32701 | 201 |
| 22N56-43421 | 165 | 22N57-42001 | 177 | 22N58-10521 | 206 | 22N58-32701 | 207 |
| 22N56-43421 | 165 | 22N57-42001 | 178 | 22N58-10521 | 214 | 22N58-32701 | 215 |
| 22N56-43431 | 165 | 22N57-42101 | 175 | 22N58-10521 | 222 | 22N58-32701 | 223 |
| 22N56-43531 | 155 | 22N57-42101 | 176 | 22N58-20201 | 201 | 22N58-32711 | 201 |
| 22N56-43531 | 156 | 22N57-42101 | 177 | 22N58-20201 | 201 | 22N58-32711 | 207 |
| 22N56-43541 | 155 | 22N57-42101 | 178 | 22N58-20701 | 201 | 22N58-32711 | 215 |
| 22N56-43771 | 165 | 22N57-42121 | 175 | 22N58-22001 | 216 | 22N58-32711 | 223 |
| 22N56-43801 | 165 | 22N57-42121 | 176 | 22N58-22111 | 216 | 22N58-34501 | 203 |
| 22N56-43831 | 165 | 22N57-42121 | 177 | 22N58-22121 | 216 | 22N58-34601 | 203 |
| 22N56 43871 | 165 | 22N57 42121 | 178 | 22N58-30201 | 203 | 22N58-40201 | 204 |
| 22N56-43881 | 165 | 22N57-42151 | 175 | 22N58-30211 | 203 | 22N58-40211 | 204 |
| 22N56-43911 | 165 | 22N57-42151 | 176 | 22N58-30211 | 203 | 22N58-40221 | 204 |
| 22N56-43921 | 165 | 22N57-42151 | 177 | 22N58-30221 | 203 | 22N58-40231 | 204 |
| 22N56-43931 | 165 | 22N57-42151 | 178 | 22N58-30221 | 203 | 22N58-40241 | 204 |
| 22N56-50201 | 158 | 22N57-42161 | 175 | 22N58-30231 | 203 | 22N58-40251 | 204 |
| 22N56-50211 | 158 | 22N57-42161 | 176 | 22N58 30231 | 203 | 22N58 40261 | 204 |
| 22N56-52201 | 158 | 22N57-42161 | 177 | 22N58-30241 | 203 | 22N58-40271 | 204 |
| 22N56-52222 | 158 | 22N57-42201 | 170 | 22N58-30241 | 203 | 22N58-40281 | 204 |
| 22N56-52231 | 158 | 22N57-42201 | 171 | 22N58-30251 | 203 | 22N58-40291 | 204 |
| 22N56-52241 | 158 | 22N57-42201 | 172 | 22N58-30251 | 203 | 22N58-40301 | 204 |
| 22N56-52251 | 158 | 22N57-42201 | 173 | 22N58-30261 | 203 | 22N58-40311 | 204 |
| 22N56-52302 | 159 | 22N57-42211 | 170 | 22N58-30271 | 203 | 22N58-40321 | 204 |
| 22N56-52311 | 159 | 22N57-42211 | 171 | 22N58-30281 | 203 | 22N58-40331 | 204 |
| 22N56-52321 | 159 | 22N57-42211 | 172 | 22N58-30291 | 203 | 22N58-40341 | 204 |
| 22N56-52351 | 158 | 22N57-42211 | 173 | 22N58-30301 | 203 | 22N58-40351 | 204 |
| 22N56-52351 | 158 | 22N57-52101 | 149 | 22N58-30311 | 203 | 22N58-40361 | 204 |
| 22N56-52361 | 158 | 22N57-52102 | 149 | 22N58-30321 | 203 | 22N58-40371 | 204 |
| 22N56-52402 | 158 | 22N57-52302 | 148 | 22N58-30331 | 203 | 22N58-40381 | 204 |
| 22N57-30221 | 170 | 22N57-62001 | 182 | 22N58-30341 | 203 | 22N58-43011 | 204 |
| 22N57-30231 | 171 | 22N57-62101 | 180 | 22N58-30351 | 203 | 22N58-43011 | 204 |
| 22N57-30241 | 172 | 22N57-62101 | 181 | 22N58-30361 | 203 | 22N58-43011 | 212 |
| 22N57-30251 | 173 | 22N57-62101 | 182 | 22N58-30371 | 203 | 22N58-43011 | 212 |
| 22N57-30321 | 170 | 22N57-62101 | 183 | 22N58-30381 | 203 | 22N58-43011 | 226 |
| 22N57-30321 | 170 | 22N57-62201 | 180 | 22N58-30391 | 203 | 22N58-43011 | 227 |
| 22N57-30331 | 171 | 22N57-62201 | 181 | 22N58-30401 | 203 | 22N58-45001 | 205 |

PARTS NUMBER INDEX


| Part No. | Fig.No. | Part No. | Fig.No. | Part No. | Fig.No. | Part No. | Fig.No. |
|---|---|---|---|---|---|---|---|
| 22N58-45001 | 221 | 22P45-42101 | 133 | 222A2-42511 | 46 | 225R2-42001 | 39 |
| 22N58-45001 | 228 | 22P45-42201 | 136 | 222A6-42381 | 56 | 225R6-32001 | 153 |
| 22N58-50101 | 190 | 22P46-40021 | 155 | 222A6-42451 | 156 | 225R6-42031 | 61 |
| 22N58-50111 | 190 | 22P47-60101 | 189 | 222A6-42461 | 156 | 225R6-42031 | 160 |
| 22N58-50121 | 190 | 22P47-60111 | 189 | 222A9-32011 | 128 | 225R6-42031 | 161 |
| 22N58-50131 | 190 | 22P47-62001 | 183 | 22208-40031 | 211 | 225R6-42031 | 162 |
| 22N58-50141 | 190 | 22S52-42221 | 39 | 22208-40031 | 219 | 225R9-12001 | 194 |
| 22N58-50201 | 190 | 22018-30121 | 201 | 22208-40031 | 220 | 225R9-12052 | 194 |
| 22N58-50211 | 190 | 22018-30121 | 207 | 22214-30321 | 98 | 225R9-12071 | 194 |
| 22N58-50221 | 190 | 22018-30121 | 215 | 22214-30321 | 99 | 225R9-12081 | 194 |
| 22N58-50231 | 190 | 22018-30121 | 223 | 22218-40191 | 204 | 225R9-12091 | 194 |
| 22N58-50241 | 190 | 22018-30261 | 201 | 22218-40191 | 211 | 225R9-12101 | 153 |
| 22N58-50301 | 191 | 22018-30261 | 207 | 22218-40191 | 219 | 225R9-12112 | 194 |
| 22N58-50311 | 191 | 22018-30261 | 215 | 22218-40191 | 220 | 225R9-12142 | 192 |
| 22N58-50311 | 191 | 22018-30261 | 223 | 22218-40191 | 226 | 22517-40051 | 175 |
| 22N58-50311 | 191 | 221A2-42031 | 56 | 22218-40191 | 227 | 22517-40051 | 176 |
| 22N58-50311 | 191 | 22132-40041 | 44 | 22218-42111 | 211 | 22517-40051 | 177 |
| 22N58-52101 | 190 | 22132-40041 | 45 | 22218-42111 | 219 | 22517-40051 | 178 |
| 22N58-52111 | 190 | 22132-40041 | 45 | 22218-42111 | 220 | 22517-40051 | 204 |
| 22N58-52121 | 190 | 22132-40041 | 46 | 22252-32241 | 19 | 22517-40051 | 220 |
| 22N58-52301 | 190 | 22132-40202 | 44 | 22252-32241 | 21 | 22548-34031 | 201 |
| 22N58-52801 | 190 | 22132-40202 | 45 | 22252-32241 | 23 | 22548-34051 | 201 |
| 22N58-52811 | 190 | 22132-40202 | 45 | 22252-32241 | 24 | 22548-34061 | 201 |
| 22N58-52821 | 190 | 22132-40202 | 46 | 22252-32241 | 25 | 22580-53321 | 212 |
| 22N58-52831 | 190 | 22192-22091 | 17 | 22252-32251 | 13 | 22580-53321 | 212 |
| 22N58-52841 | 190 | 22192-22091 | 18 | 22252-32251 | 19 | 22655-42591 | 135 |
| 22N58-52851 | 190 | 22192-42411 | 44 | 22252-32251 | 21 | 22655-42591 | 136 |
| 22N58-52861 | 190 | 22192-42411 | 45 | 22252-32251 | 23 | 22658-52301 | 122 |
| 22N58-52871 | 190 | 22192-42411 | 45 | 22252-32251 | 24 | 22673-72111 | 93 |
| 22N58-52901 | 190 | 22192-42411 | 46 | 22256-42001 | 11 | 22673-72131 | 93 |
| 22N58-52911 | 190 | 22193-03001 | 87 | 22256-42001 | 44 | 22673-72141 | 93 |
| 22N58-52921 | 190 | 22197-52091 | 70 | 22256-42001 | 45 | 22673-72161 | 93 |
| 22N58-52931 | 190 | 22199-12401 | 62 | 22256-42001 | 45 | 22673-72252 | 93 |
| 22N58-52941 | 190 | 22199-12401 | 98 | 22256-42001 | 46 | 22673-72261 | 93 |
| 22N58 53001 | 191 | 22199 12401 | 98 | 22256-42001 | 47 | 22673-72321 | 93 |
| 22N58-53101 | 191 | 22199-12401 | 99 | 22256-42001 | 155 | 22673-72391 | 93 |
| 22N58-53101 | 191 | 22199-12401 | 99 | 224G5-42061 | 134 | 22673-79801 | 93 |
| 22N59-12041 | 192 | 22199-12401 | 100 | 224G5-42061 | 135 | 22679-43831 | 212 |
| 22N59-12051 | 192 | 22199-12401 | 122 | 224G5-42061 | 136 | 22679-43831 | 227 |
| 22N59-12061 | 192 | 22199-12401 | 131 | 224T8-52291 | 226 | 22679-45611 | 211 |
| 22N59-12101 | 192 | 22199-12401 | 132 | 224T8 53021 | 191 | 22679 45651 | 219 |
| 22N59-12111 | 192 | 22199-12401 | 133 | 224W5-30202 | 136 | 22679-45671 | 211 |
| 22N59-12151 | 192 | 22199-12401 | 190 | 224W5-30202 | 142 | 22679-45711 | 204 |
| 22N59-12161 | 192 | 22199-12401 | 190 | 224W5-32401 | 142 | 22679-45711 | 211 |
| 22N59-12171 | 192 | 22199-22001 | 199 | 224W5-32421 | 142 | 22679-45731 | 219 |
| 22N59-12181 | 192 | 22199-22001 | 199 | 224W5-32441 | 142 | 22679-45731 | 226 |
| 22N59-12261 | 193 | 22199-22251 | 199 | 224W5-32451 | 142 | 22679-45771 | 204 |
| 22N59-12281 | 192 | 22199-22251 | 199 | 224W5-32461 | 142 | 22679-45771 | 211 |
| 22N59-12351 | 193 | 22199-22261 | 199 | 224W5-32471 | 142 | 22679-45791 | 211 |
| 22N59-12601 | 192 | 22199-22261 | 199 | 224W5-32481 | 142 | 22679-45791 | 219 |
| 22N90-90152 | 221 | 222A2-10211 | 9 | 224W5-32491 | 142 | 22679-45811 | 211 |
| 22N90-90161 | 221 | 222A2-10211 | 10 | 224W5-32501 | 142 | 22679-45811 | 226 |
| 22N92-32001 | 24 | 222A2-22061 | 150 | 224W5-32511 | 142 | 22679-45831 | 220 |
| 22N92-32001 | 25 | 222A2-22061 | 151 | 224W5-32521 | 142 | 22679-45851 | 204 |
| 22P41-00101 | 2 | 222A2-42031 | 160 | 224W5-32551 | 142 | 22679-45851 | 226 |
| 22P41-00401 | 2 | 222A2-42031 | 161 | 224W5-42401 | 142 | 22679-45871 | 219 |
| 22P42-12201 | 12 | 222A2-42031 | 162 | 224W5-42431 | 142 | 22679-45891 | 204 |
| 22P45-30151 | 136 | 222A2-42511 | 44 | 224W7-60311 | 136 | 22679-45891 | 211 |
| 22P45-30302 | 133 | 222A2-42511 | 45 | 225A7-62021 | 168 | 22679-45891 | 211 |
| 22P45-40201 | 133 | 222A2-42511 | 45 | 225N8-43021 | 204 | 22679-45891 | 220 |

PARTS NUMBER INDEX


| Part No. | Fig.No. | Part No. | Fig.No. | Part No. | Fig.No. | Part No. | Fig.No. |
|---|---|---|---|---|---|---|---|
| 22679-45911 | 204 | 229F0-51261 | 212 | 231A8-12011 | 206 | 234A0-50181 | 212 |
| 22679-45911 | 219 | 229F0-51271 | 212 | 231A8-12011 | 214 | 234A0-50201 | 212 |
| 22679-45931 | 226 | 229F0-51281 | 212 | 231A8-12011 | 222 | 234A0-50211 | 212 |
| 22679-45951 | 211 | 229F0-51291 | 212 | 231A8-12021 | 200 | 234A0-50221 | 212 |
| 22679-45951 | 220 | 229F0-51301 | 212 | 231A8-12021 | 206 | 234A0-50241 | 212 |
| 22679-45951 | 226 | 229F0-51311 | 212 | 231A8-12021 | 214 | 234A0-50251 | 212 |
| 22679-45971 | 204 | 229F0-51321 | 212 | 231A8-12021 | 222 | 234A0-50261 | 212 |
| 22679-45991 | 211 | 229F0-51331 | 212 | 231A8-12031 | 200 | 234A0-50271 | 212 |
| 22679-45991 | 219 | 229F0-51341 | 212 | 231A8-12031 | 206 | 234A0-50281 | 212 |
| 22679-45991 | 227 | 229F0-51351 | 212 | 231A8-12031 | 214 | 234A0-50291 | 212 |
| 22679-46011 | 211 | 229F0-51361 | 212 | 231A8-12031 | 222 | 234A0-50301 | 212 |
| 22679-46011 | 211 | 229F0-51371 | 212 | 231F8-10501 | 200 | 234A0-50311 | 212 |
| 22679-46011 | 219 | 229F0-51381 | 212 | 231F8-10501 | 206 | 234A0-50321 | 212 |
| 22679-46031 | 204 | 229F0-94101 | 221 | 231F8-10501 | 214 | 234A0-50331 | 212 |
| 22679-46031 | 220 | 229F0-94101 | 228 | 231F8-10501 | 222 | 234A0-50341 | 212 |
| 22679-46051 | 204 | 229F2-22071 | 150 | 231F8-10571 | 200 | 234A0-50351 | 212 |
| 22679-46071 | 227 | 229F2-22071 | 151 | 231F8-10571 | 206 | 234A0-50361 | 212 |
| 22679-46091 | 220 | 229F2-22151 | 148 | 231F8-10571 | 214 | 234A0-50371 | 212 |
| 22679-46111 | 204 | 229F2-22151 | 150 | 231F8-10571 | 222 | 234A0-50381 | 212 |
| 22679-46111 | 211 | 229F2-22151 | 151 | 232A0-62001 | 213 | 234A0-50501 | 212 |
| 22679-46111 | 219 | 229F2-22171 | 150 | 232A8-42201 | 212 | 234A0-50511 | 212 |
| 22679-46111 | 227 | 229F2-22171 | 151 | 232A8-42201 | 212 | 234A0-50521 | 212 |
| 22679-46151 | 204 | 229F6-42201 | 21 | 232A8-42201 | 220 | 234A0-50531 | 212 |
| 22679-46151 | 204 | 229G0-52251 | 226 | 232A8-42201 | 220 | 234A0-50541 | 212 |
| 22679-46151 | 220 | 229G7-82001 | 189 | 232A8-42201 | 226 | 234A0-50551 | 212 |
| 22679-46171 | 204 | 229G7-82051 | 186 | 232A8-42601 | 227 | 234A0-50561 | 212 |
| 22679-46171 | 211 | 229G7-82051 | 189 | 232A8-42621 | 227 | 234A0-50571 | 212 |
| 22679-46171 | 220 | 229G7-82101 | 189 | 232A8-42631 | 227 | 234A0-50581 | 212 |
| 22679-46191 | 227 | 230C2-42201 | 36 | 232L8-42601 | 226 | 234A0-50591 | 212 |
| 22679-46211 | 219 | 230C2-42201 | 38 | 232L8-42621 | 226 | 234A0-50601 | 212 |
| 22679-46211 | 227 | 230C2-42201 | 83 | 232L8-42631 | 226 | 234A0-50611 | 212 |
| 22679-46231 | 211 | 230C2-42201 | 83 | 232W9-12001 | 194 | 234A0-50621 | 212 |
| 22679-46271 | 204 | 230C2-42201 | 84 | 232W9-12011 | 194 | 234A0-50631 | 212 |
| 22679-46271 | 220 | 230C2-42201 | 84 | 232W9-12021 | 194 | 234A0-50641 | 212 |
| 22679 46311 | 211 | 230C2 42201 | 85 | 232W9-12051 | 194 | 234A0-50651 | 212 |
| 22679-46331 | 204 | 230C2-42201 | 85 | 232W9-12101 | 194 | 234A0-50661 | 212 |
| 22679-46331 | 219 | 230C2-42201 | 86 | 232W9-12111 | 194 | 234A0-50671 | 212 |
| 22679-46371 | 211 | 230C2-42201 | 86 | 23232-42072 | 35 | 234A0-50681 | 212 |
| 22679-46391 | 204 | 230C2-42301 | 40 | 23232-42072 | 36 | 234A0-50701 | 212 |
| 22679-46391 | 220 | 23019-20011 | 199 | 23232-42072 | 37 | 234A0-50711 | 212 |
| 22679-46411 | 219 | 23019-20011 | 199 | 23232 42072 | 38 | 234A0 50721 | 212 |
| 22679-46451 | 204 | 231A0-82001 | 211 | 23235-40091 | 140 | 234A0-50731 | 212 |
| 22679-46491 | 220 | 231A0-82001 | 219 | 234A0-50001 | 212 | 234A0-50741 | 212 |
| 22679-46531 | 204 | 231A8-10101 | 200 | 234A0-50011 | 212 | 234A0-50751 | 212 |
| 22679-46531 | 211 | 231A8-10101 | 200 | 234A0-50021 | 212 | 234A0-50761 | 212 |
| 22679-46591 | 220 | 231A8-10101 | 206 | 234A0-50031 | 212 | 234A0-50771 | 212 |
| 22679-46651 | 211 | 231A8-10101 | 206 | 234A0-50041 | 212 | 234A0-50781 | 212 |
| 22679-46691 | 204 | 231A8-10101 | 214 | 234A0-50051 | 212 | 234A0-50791 | 212 |
| 22679-46811 | 204 | 231A8-10101 | 214 | 234A0-50061 | 212 | 234A0-50801 | 212 |
| 22717-40081 | 204 | 231A8-10101 | 222 | 234A0-50071 | 212 | 234A0-50811 | 212 |
| 22717-40081 | 220 | 231A8-10101 | 222 | 234A0-50081 | 212 | 234A0-50821 | 212 |
| 228F2-42131 | 31 | 231A8-10171 | 200 | 234A0-50091 | 212 | 234A0-50831 | 212 |
| 228F2-42131 | 32 | 231A8-10171 | 206 | 234A0-50101 | 212 | 234A0-50841 | 212 |
| 22854-40201 | 110 | 231A8-10171 | 214 | 234A0-50111 | 212 | 234A0-50851 | 212 |
| 229F0-51201 | 212 | 231A8-10171 | 222 | 234A0-50121 | 212 | 234A0-50861 | 212 |
| 229F0-51211 | 212 | 231A8-12001 | 200 | 234A0-50131 | 212 | 234A0-50871 | 212 |
| 229F0-51221 | 212 | 231A8-12001 | 206 | 234A0-50141 | 212 | 234A0-50881 | 212 |
| 229F0-51231 | 212 | 231A8-12001 | 214 | 234A0-50151 | 212 | 234A0-51231 | 212 |
| 229F0-51241 | 212 | 231A8-12001 | 222 | 234A0-50161 | 212 | 234A0-52501 | 212 |
| 229F0-51251 | 212 | 231A8-12011 | 200 | 234A0-50171 | 212 | 234A0-52501 | 212 |

PARTS NUMBER INDEX


| Part No. | Fig.No. | Part No. | Fig.No. | Part No. | Fig.No. | Part No. | Fig.No. |
|---|---|---|---|---|---|---|---|
| 234A0-52511 | 212 | 234A8-10581 | 222 | 234A8-42551 | 227 | 23650-52851 | 212 |
| 234A0-52511 | 212 | 234A8-10591 | 200 | 234A8-42561 | 212 | 23650-52851 | 212 |
| 234A0-52611 | 212 | 234A8-10591 | 206 | 234A8-42561 | 212 | 23650-52861 | 212 |
| 234A0-52611 | 212 | 234A8-10591 | 214 | 234A8-42561 | 220 | 23650-52861 | 212 |
| 234A0-62051 | 213 | 234A8-10591 | 222 | 234A8-42561 | 220 | 23650-83521 | 227 |
| 234A0-62111 | 213 | 234A8-10601 | 200 | 234A8-42571 | 212 | 23650-83531 | 227 |
| 234A1-00101 | 4 | 234A8-10601 | 206 | 234A8-42571 | 212 | 23650-83551 | 227 |
| 234A1-00111 | 4 | 234A8-10601 | 214 | 234A8-42571 | 220 | 23650-83561 | 227 |
| 234A1-00121 | 4 | 234A8-10601 | 222 | 234A8-42571 | 220 | 23650-83561 | 227 |
| 234A1-02001 | 8 | 234A8-10611 | 200 | 234A8-42571 | 226 | 23652-12051 | 13 |
| 234A2-12201 | 9 | 234A8-10611 | 206 | 234A8-42602 | 205 | 23652-12051 | 19 |
| 234A2-12201 | 10 | 234A8-10611 | 214 | 234A8-42602 | 213 | 23652-12051 | 21 |
| 234A2-12211 | 9 | 234A8-10611 | 222 | 234A8-42602 | 221 | 23652-12051 | 63 |
| 234A2-12211 | 10 | 234A8-10621 | 200 | 234A8-42602 | 228 | 23652-22121 | 6 |
| 234A2-42301 | 55 | 234A8-10621 | 206 | 234A8-42611 | 205 | 23652-22121 | 8 |
| 234A3-72001 | 93 | 234A8-10621 | 214 | 234A8-42611 | 213 | 23652-44001 | 76 |
| 234A3-72021 | 93 | 234A8-10621 | 222 | 234A8-42611 | 221 | 23653-72031 | 93 |
| 234A3-72031 | 93 | 234A8-10631 | 200 | 234A8-42611 | 228 | 23653-72041 | 93 |
| 234A3-72101 | 93 | 234A8-10631 | 206 | 234A8-42622 | 205 | 23653-72051 | 93 |
| 234A6-32001 | 152 | 234A8-10631 | 214 | 234A8-42622 | 213 | 23653-72062 | 93 |
| 234A6-32001 | 153 | 234A8-10631 | 222 | 234A8-42622 | 221 | 23653-72072 | 93 |
| 234A6-43121 | 156 | 234A8-10641 | 200 | 234A8-42622 | 228 | 23653-72081 | 93 |
| 234A8-02101 | 205 | 234A8-10641 | 206 | 234A8-43501 | 204 | 23653-72101 | 93 |
| 234A8-02101 | 213 | 234A8-10641 | 214 | 234A8-43501 | 211 | 23653-72131 | 93 |
| 234A8-02201 | 205 | 234A8-10641 | 222 | 234A8-43501 | 219 | 23653-72142 | 93 |
| 234A8-10501 | 200 | 234A8-10652 | 200 | 234A8-43501 | 220 | 23653-72152 | 93 |
| 234A8-10501 | 206 | 234A8-10652 | 206 | 234A8-43501 | 226 | 23653-72161 | 93 |
| 234A8-10501 | 214 | 234A8-10652 | 214 | 234A8-43501 | 227 | 23653-72171 | 93 |
| 234A8-10501 | 222 | 234A8-10652 | 222 | 234H7-60301 | 181 | 23653-72201 | 93 |
| 234A8-10511 | 200 | 234A8-10662 | 200 | 234H7-60301 | 183 | 23654-32041 | 98 |
| 234A8-10511 | 206 | 234A8-10662 | 206 | 234H7-62171 | 189 | 23654-32041 | 99 |
| 234A8-10511 | 214 | 234A8-10662 | 214 | 234H7-62301 | 169 | 23654-32161 | 98 |
| 234A8-10511 | 222 | 234A8-10662 | 222 | 234H7-62351 | 169 | 23654-32161 | 99 |
| 234A8-10521 | 200 | 234A8-10672 | 200 | 23451-02011 | 23 | 23654-34051 | 101 |
| 234A8 10521 | 206 | 234A8 10672 | 206 | 23451-02011 | 24 | 23654-40501 | 115 |
| 234A8-10521 | 214 | 234A8-10672 | 214 | 23451-02011 | 25 | 23654-40501 | 117 |
| 234A8-10521 | 222 | 234A8-10672 | 222 | 23452-42181 | 39 | 23654-40501 | 119 |
| 234A8-10531 | 200 | 234A8-10682 | 200 | 23452-42181 | 40 | 23654-40501 | 121 |
| 234A8-10531 | 206 | 234A8-10682 | 206 | 23453-02071 | 88 | 23654-40511 | 117 |
| 234A8-10531 | 214 | 234A8-10682 | 214 | 23453-02091 | 88 | 23655-22101 | 129 |
| 234A8-10531 | 222 | 234A8-10682 | 222 | 23453 02131 | 88 | 23655 22101 | 130 |
| 234A8-10541 | 200 | 234A8-22202 | 202 | 23454-40501 | 103 | 23655-22101 | 155 |
| 234A8-10541 | 206 | 234A8-22202 | 208 | 23454-40501 | 105 | 23655-42421 | 131 |
| 234A8-10541 | 214 | 234A8-22202 | 224 | 23454-40501 | 107 | 23655-42421 | 131 |
| 234A8-10541 | 222 | 234A8-40701 | 205 | 23454-40501 | 109 | 23655-42421 | 132 |
| 234A8-10551 | 200 | 234A8-40701 | 213 | 23454-40601 | 105 | 23655-42421 | 132 |
| 234A8-10551 | 206 | 234A8-40701 | 221 | 23457-42041 | 176 | 23655-42421 | 133 |
| 234A8-10551 | 214 | 234A8-40701 | 228 | 23457-42041 | 177 | 23655-42421 | 133 |
| 234A8-10551 | 222 | 234A8-41001 | 205 | 23458-32052 | 201 | 23656-42601 | 69 |
| 234A8-10562 | 200 | 234A8-41001 | 213 | 23460-53171 | 122 | 23657-42131 | 176 |
| 234A8-10562 | 206 | 234A8-41001 | 221 | 23467-82041 | 189 | 23657-60311 | 181 |
| 234A8-10562 | 214 | 234A8-41001 | 228 | 23500-82001 | 204 | 23657-60311 | 183 |
| 234A8-10562 | 222 | 234A8-41101 | 205 | 23500-82001 | 211 | 23658-42531 | 220 |
| 234A8-10571 | 200 | 234A8-41101 | 213 | 23500-82001 | 219 | 23658-52101 | 190 |
| 234A8-10571 | 206 | 234A8-42551 | 204 | 23500-82001 | 220 | 23658-52101 | 190 |
| 234A8-10571 | 214 | 234A8-42551 | 204 | 23500-82001 | 227 | 23658-52401 | 190 |
| 234A8-10571 | 222 | 234A8-42551 | 212 | 236L2-10102 | 10 | 23658-52401 | 190 |
| 234A8-10581 | 200 | 234A8-42551 | 212 | 23647-40041 | 175 | 23659-12101 | 194 |
| 234A8-10581 | 206 | 234A8-42551 | 220 | 23650-52841 | 212 | 23659-12101 | 195 |
| 234A8-10581 | 214 | 234A8-42551 | 220 | 23650-52841 | 212 | 23659-12101 | 196 |

PARTS NUMBER INDEX


| Part No. | Fig.No. | Part No. | Fig.No. | Part No. | Fig.No. | Part No. | Fig.No. |
|---|---|---|---|---|---|---|---|
| 23659-12101 | 197 | 242F1-02111 | 6 | 242F6-82281 | 166 | 247C2-43501 | 86 |
| 23659-12101 | 198 | 242F1-02111 | 8 | 242F6-82291 | 166 | 247C2-43501 | 86 |
| 23659-42161 | 208 | 242F1-02121 | 6 | 242F6-82291 | 167 | 247C2-43601 | 83 |
| 23659-42161 | 216 | 242F1-02121 | 8 | 242F6-82301 | 166 | 247C2-43601 | 83 |
| 23678-06002 | 203 | 242F2-12051 | 15 | 242F6-82311 | 166 | 247C2-43601 | 84 |
| 23678-06002 | 209 | 242F2-42151 | 40 | 242F6-82321 | 166 | 247C2-43601 | 84 |
| 23678-06002 | 217 | 242F2-42151 | 40 | 242F6-82331 | 166 | 247C2-43601 | 85 |
| 23678-06002 | 225 | 242F2-42301 | 33 | 242F6-82341 | 167 | 247C2-43601 | 85 |
| 23679-45051 | 57 | 242F2-42301 | 34 | 242F6-82351 | 167 | 247C2-43601 | 86 |
| 23679-45801 | 226 | 242F2-42311 | 33 | 242F6-82361 | 167 | 247C2-43601 | 86 |
| 237A2-10102 | 9 | 242F2-42311 | 34 | 242F6-82371 | 167 | 24868-42111 | 204 |
| 237H2-10102 | 9 | 242F2-42321 | 33 | 242S2-52001 | 60 | 24868-42111 | 220 |
| 23772-12071 | 9 | 242F2-42321 | 34 | 24235-42091 | 140 | 24868-42111 | 220 |
| 23772-12071 | 10 | 242F6-80101 | 166 | 24237-62331 | 97 | 251A2-22001 | 18 |
| 23775-42101 | 135 | 242F6-80201 | 167 | 243C6-40021 | 155 | 25369-47031 | 56 |
| 23775-42101 | 136 | 242F6-82001 | 166 | 243C6-42821 | 163 | 25492-22001 | 18 |
| 238A2-42151 | 40 | 242F6-82001 | 167 | 243C6-42821 | 163 | 25592-42081 | 39 |
| 238F9-12071 | 193 | 242F6-82011 | 166 | 243C7-80201 | 97 | 25592-42081 | 40 |
| 23813-00071 | 101 | 242F6-82011 | 167 | 24320-52001 | 212 | 25592-42121 | 150 |
| 23813-00081 | 101 | 242F6-82021 | 166 | 24320-55001 | 226 | 25592-42121 | 151 |
| 23819-20011 | 199 | 242F6-82031 | 166 | 24329-45541 | 65 | 25595-42411 | 143 |
| 23819-20011 | 199 | 242F6-82031 | 167 | 24329-45541 | 67 | 25595-42421 | 143 |
| 23819-20021 | 199 | 242F6-82041 | 166 | 24329-45541 | 69 | 25595-42452 | 141 |
| 23819-20021 | 199 | 242F6-82041 | 167 | 24329-46201 | 205 | 25595-42452 | 143 |
| 23870-52871 | 174 | 242F6-82051 | 166 | 24329-46201 | 221 | 25595-42452 | 144 |
| 239A2-12021 | 13 | 242F6-82051 | 167 | 24329-46201 | 228 | 25595-42482 | 143 |
| 239A2-40501 | 29 | 242F6-82061 | 166 | 24329-46201 | 228 | 25595-42491 | 134 |
| 239A2-42221 | 41 | 242F6-82071 | 166 | 24352-42521 | 31 | 25595-42491 | 135 |
| 239A2-42221 | 41 | 242F6-82071 | 167 | 24352-42521 | 32 | 25595-42491 | 136 |
| 239A4-12402 | 94 | 242F6-82081 | 166 | 24352-42521 | 33 | 25595-42501 | 143 |
| 239A4-12411 | 94 | 242F6-82091 | 166 | 24352-42521 | 34 | 25599-22001 | 199 |
| 239A4-12431 | 94 | 242F6-82101 | 166 | 24353-72001 | 88 | 25599-22001 | 199 |
| 239A4-12441 | 94 | 242F6-82101 | 167 | 24354-32311 | 101 | 25599-22051 | 199 |
| 239A4-12541 | 160 | 242F6-82111 | 166 | 24453-02061 | 88 | 25599-22051 | 199 |
| 239A4 12541 | 162 | 242F6 82111 | 167 | 24453-02102 | 88 | 25599-22061 | 199 |
| 239A5-40501 | 134 | 242F6-82121 | 166 | 24454-32232 | 98 | 25599-22061 | 199 |
| 239A5-40501 | 141 | 242F6-82121 | 167 | 24454-32232 | 99 | 25599-32001 | 155 |
| 239A5-42301 | 140 | 242F6-82131 | 166 | 24459-42291 | 226 | 25599-32021 | 155 |
| 239A5-42471 | 137 | 242F6-82141 | 166 | 24459-42951 | 205 | 256A1-08031 | 4 |
| 239A5-42471 | 139 | 242F6-82151 | 166 | 24459-42951 | 213 | 256A2-12031 | 13 |
| 239A8-20101 | 208 | 242F6-82151 | 167 | 24459 42951 | 221 | 256A2 12041 | 13 |
| 239A8-20101 | 216 | 242F6-82161 | 166 | 24459-42951 | 228 | 256C1-08011 | 3 |
| 239A8-20111 | 208 | 242F6-82161 | 167 | 246B2-43221 | 83 | 256C2-42231 | 39 |
| 239A8-20111 | 216 | 242F6-82171 | 166 | 246B2-43221 | 83 | 256C2-42231 | 40 |
| 239A8-20121 | 208 | 242F6-82171 | 167 | 246B2-43221 | 84 | 256C5-12631 | 56 |
| 239A8-20121 | 216 | 242F6-82181 | 166 | 246B2-43221 | 84 | 256C6-32011 | 1 |
| 239A8-20131 | 208 | 242F6-82181 | 167 | 246B2-43221 | 85 | 256C6-32011 | 2 |
| 239A8-20131 | 216 | 242F6-82191 | 166 | 246B2-43221 | 85 | 256C9-52372 | 1 |
| 239A8-20141 | 208 | 242F6-82191 | 167 | 246B2-43221 | 86 | 256C9-52372 | 2 |
| 239A8-20141 | 216 | 242F6-82201 | 166 | 246B2-43221 | 86 | 256G1-08011 | 4 |
| 239A9-12301 | 193 | 242F6-82211 | 166 | 247C2-43301 | 83 | 256G1-08021 | 4 |
| 239A9-12501 | 193 | 242F6-82221 | 166 | 247C2-43301 | 83 | 256T2-42121 | 160 |
| 239A9-92001 | 128 | 242F6-82231 | 166 | 247C2-43301 | 84 | 256T2-42121 | 161 |
| 239A9-92001 | 128 | 242F6-82241 | 166 | 247C2-43301 | 84 | 256T2-42121 | 162 |
| 239H7-60201 | 169 | 242F6-82241 | 166 | 247C2-43301 | 85 | 25785-43091 | 134 |
| 239T9-12071 | 194 | 242F6-82241 | 167 | 247C2-43301 | 85 | 25790-94021 | 221 |
| 23917-42191 | 212 | 242F6-82251 | 166 | 247C2-43301 | 86 | 25790-94021 | 228 |
| 23917-42191 | 227 | 242F6-82261 | 166 | 247C2-43301 | 86 | 26062-42881 | 33 |
| 240A5-42411 | 137 | 242F6-82261 | 167 | 247C2-43501 | 84 | 26062-42881 | 34 |
| 240A5-42411 | 139 | 242F6-82271 | 166 | 247C2-43501 | 84 | 26062-42881 | 52 |

PARTS NUMBER INDEX


| Part No. | Fig.No. | Part No. | Fig.No. | Part No. | Fig.No. | Part No. | Fig.No. |
|---|---|---|---|---|---|---|---|
| 26062-42881 | 54 | 277H7-60601 | 174 | 277P8-22051 | 225 | 278M6-42031 | 159 |
| 26062-42881 | 79 | 277P0-60301 | 213 | 277P8-22051 | 225 | 278R0-63151 | 226 |
| 26062-42881 | 80 | 277P0-60311 | 213 | 277P8-22061 | 201 | 27912-62441 | 146 |
| 26062-42881 | 81 | 277P0-60321 | 213 | 277P8-22061 | 201 | 27912-62441 | 146 |
| 26062-42881 | 82 | 277P0-60331 | 213 | 277P8-22061 | 203 | 27970-53141 | 227 |
| 26519-12281 | 193 | 277P0-60341 | 213 | 277P8-22061 | 207 | 27978-42411 | 226 |
| 26602-42041 | 98 | 277P0-60351 | 213 | 277P8-22061 | 209 | 27978-42421 | 226 |
| 26602-42081 | 18 | 277P0-60361 | 213 | 277P8-22061 | 215 | 27978-42601 | 226 |
| 26602-42101 | 221 | 277P0-60371 | 213 | 277P8-22061 | 217 | 27979-43101 | 205 |
| 26602-42221 | 184 | 277P0-60381 | 213 | 277P8-22061 | 217 | 27979-43101 | 213 |
| 26602-42221 | 184 | 277P0-60391 | 213 | 277P8-22061 | 223 | 27979-43101 | 221 |
| 27042-42312 | 78 | 277P0-60401 | 213 | 277P8-22061 | 225 | 27979-43101 | 228 |
| 27042-42322 | 188 | 277P0-60411 | 213 | 277P8-22061 | 225 | 280C2-42301 | 30 |
| 27042-64311 | 78 | 277P0-60421 | 213 | 277P8-22071 | 201 | 280C2-42311 | 30 |
| 27045-40302 | 134 | 277P0-60431 | 213 | 277P8-22071 | 203 | 280C2-42331 | 29 |
| 27045-40302 | 135 | 277P0-60441 | 213 | 277P8-22071 | 203 | 280C2-42331 | 30 |
| 27045-40302 | 136 | 277P0-60451 | 213 | 277P8-22071 | 207 | 280C2-42341 | 30 |
| 27045-40302 | 143 | 277P0-60461 | 213 | 277P8-22071 | 209 | 280C2-42351 | 29 |
| 27045-42371 | 135 | 277P0-60471 | 213 | 277P8-22071 | 209 | 280C2-42351 | 30 |
| 27049-12172 | 192 | 277P0-60481 | 213 | 277P8-22071 | 215 | 281E6-42521 | 160 |
| 271A7-52301 | 148 | 277P0-81101 | 227 | 277P8-22071 | 217 | 281E6-42521 | 161 |
| 271A9-12251 | 193 | 277P0-81131 | 227 | 277P8-22071 | 217 | 281E6-42521 | 162 |
| 271G3-72001 | 93 | 277P0-81141 | 227 | 277P8-22071 | 217 | 281E6-42571 | 160 |
| 272E5-42402 | 136 | 277P0-81151 | 227 | 277P8-22071 | 223 | 281E6-42571 | 161 |
| 272K8-52201 | 203 | 277P0-81161 | 227 | 277P8-22071 | 225 | 281E6-42571 | 162 |
| 272K8-52201 | 209 | 277P0-81302 | 227 | 277P8-22071 | 225 | 281E7-42101 | 179 |
| 272K8-52201 | 217 | 277P0-81332 | 227 | 277P8-22071 | 225 | 281E7-62041 | 187 |
| 272K8-52201 | 225 | 277P0-81342 | 227 | 277P8-22081 | 201 | 282M8-32501 | 212 |
| 273A6-42471 | 21 | 277P0-81352 | 227 | 277P8-22081 | 203 | 29590-64501 | 9 |
| 273A6-42471 | 158 | 277P0-81362 | 227 | 277P8-22081 | 203 | 29590-64501 | 10 |
| 273A9-12242 | 192 | 277P0-81502 | 227 | 277P8-22081 | 207 | 3956323 | 74 |
| 27397-52101 | 65 | 277P0-81532 | 227 | 277P8-22081 | 209 | 50B77-50101 | 75 |
| 27410-53111 | 212 | 277P0-81542 | 227 | 277P8-22081 | 209 | 50B77-52051 | 78 |
| 27410-53111 | 212 | 277P0-81552 | 227 | 277P8-22081 | 215 | 50B77-52061 | 78 |
| 27419-12061 | 194 | 277P0-81562 | 227 | 277P8-22081 | 217 | 50B77-52101 | 78 |
| 27419-12061 | 195 | 277P0-81702 | 227 | 277P8-22081 | 217 | 50B77-52111 | 78 |
| 27419-12061 | 196 | 277P0-81732 | 227 | 277P8-22081 | 217 | 50B77-52151 | 78 |
| 27419-12061 | 197 | 277P0-81742 | 227 | 277P8-22081 | 223 | 50B77-52161 | 78 |
| 27419-12061 | 198 | 277P0-81752 | 227 | 277P8-22081 | 225 | 509K2-30101 | 30 |
| 27419-12062 | 193 | 277P0-81762 | 227 | 277P8-22081 | 225 | 509K2-82251 | 194 |
| 27419-12062 | 194 | 277P0-81902 | 227 | 277P8-22081 | 225 | 509K2-82251 | 195 |
| 27419-12071 | 194 | 277P0-81932 | 227 | 277P8-32701 | 203 | 509K2-82251 | 196 |
| 27419-12071 | 195 | 277P0-81942 | 227 | 277P8-32701 | 209 | 509K2-82251 | 197 |
| 27419-12071 | 196 | 277P0-81952 | 227 | 277P8-32701 | 217 | 509K2-82251 | 198 |
| 27419-12071 | 197 | 277P0-81962 | 227 | 277P8-32701 | 225 | 509K3-82681 | 194 |
| 27419-12071 | 198 | 277P0-89811 | 227 | 277T0-62071 | 213 | 509K3-82681 | 195 |
| 27419-12072 | 193 | 277P0-92131 | 221 | 27717-52081 | 189 | 509K3-82681 | 196 |
| 27419-12072 | 194 | 277P8-22051 | 201 | 27732-42221 | 125 | 509K3-82681 | 197 |
| 27419-12101 | 192 | 277P8-22051 | 201 | 27732-42311 | 56 | 509K3-82681 | 198 |
| 27539-12021 | 192 | 277P8-22051 | 203 | 27732-42311 | 71 | 509K3-82801 | 196 |
| 27662-62721 | 123 | 277P8-22051 | 203 | 27732-42311 | 72 | 509K3-82811 | 194 |
| 27662-63711 | 125 | 277P8-22051 | 207 | 278M2-42061 | 146 | 509K3-82811 | 196 |
| 27682-62131 | 83 | 277P8-22051 | 209 | 278M2-42061 | 146 | 509K3-82821 | 194 |
| 27682-62131 | 83 | 277P8-22051 | 209 | 278M2-42061 | 146 | 509K3-82821 | 196 |
| 27682-62131 | 84 | 277P8-22051 | 215 | 278M2-42061 | 146 | 509K3-82831 | 196 |
| 27682-62131 | 84 | 277P8-22051 | 217 | 278M6-42031 | 159 | 509K3-82841 | 196 |
| 27682-62131 | 85 | 277P8-22051 | 217 | 278M6-42031 | 159 | 509K3-82841 | 198 |
| 27682-62131 | 85 | 277P8-22051 | 217 | 278M6-42031 | 159 | 509K3-82851 | 196 |
| 27682-62131 | 86 | 277P8-22051 | 223 | 278M6-42031 | 159 | 509K3-82861 | 196 |
| 27682-62131 | 86 | 277P8-22051 | 225 | 278M6-42031 | 159 | 509K3-82871 | 196 |

PARTS NUMBER INDEX


| Part No. | Fig.No. | Part No. | Fig.No. | Part No. | Fig.No. | Part No. | Fig.No. |
|---|---|---|---|---|---|---|---|
| 509K3-82881 | 198 | 509S5-92241 | 21 | 514A3-82321 | 215 | 516G3-82081 | 196 |
| 509K3-82891 | 198 | 51232-82001 | 194 | 514A3-82331 | 192 | 516G3-82091 | 196 |
| 509K3-83001 | 196 | 51232-82001 | 195 | 514A3-82331 | 215 | 516G3-82101 | 196 |
| 509K3-83011 | 194 | 51232-82001 | 196 | 514A3-82341 | 192 | 516G3-82111 | 194 |
| 509K3-83011 | 196 | 51232-82001 | 197 | 514A3-82341 | 215 | 516G3-82111 | 196 |
| 509K3-83021 | 194 | 51232-82001 | 198 | 514A3-82351 | 192 | 516G3-82121 | 194 |
| 509K3-83021 | 196 | 51232-82011 | 194 | 514A3-82351 | 215 | 516G3-82121 | 196 |
| 509K3-83031 | 196 | 51232-82011 | 196 | 514A3-82361 | 192 | 516G3-82131 | 196 |
| 509K3-83041 | 196 | 51232-82021 | 194 | 514A3-82361 | 215 | 516G3-82141 | 196 |
| 509K3-83041 | 198 | 51232-82021 | 196 | 514A3-82371 | 192 | 516G3-82141 | 198 |
| 509K3-83051 | 196 | 51232-82032 | 194 | 514A3-82371 | 215 | 516G3-82151 | 196 |
| 509K3-83061 | 196 | 51233-02011 | 196 | 514A3-82381 | 192 | 516G3-82161 | 196 |
| 509K3-83071 | 196 | 51233-02021 | 196 | 514A3-82381 | 215 | 516G3-82171 | 196 |
| 509K3-83081 | 198 | 51233-83021 | 196 | 514A3-82391 | 192 | 516G3-82181 | 198 |
| 509K3-83091 | 198 | 51233-83221 | 196 | 514A3-82391 | 215 | 516G3-82191 | 198 |
| 509K3-83301 | 196 | 51233-83221 | 198 | 514A3-82601 | 103 | 516G3-82201 | 196 |
| 509K3-83311 | 196 | 51233-83421 | 196 | 514A3-82601 | 105 | 516G3-82211 | 194 |
| 509K3-83321 | 196 | 51233-83621 | 196 | 514A3-82601 | 107 | 516G3-82211 | 196 |
| 509K3-83331 | 196 | 51233-83821 | 196 | 514A3-82601 | 109 | 516G3-82221 | 194 |
| 509K3-83341 | 196 | 514A1-41001 | 53 | 514A3-82651 | 196 | 516G3-82221 | 196 |
| 509K3-83401 | 196 | 514A1-41001 | 80 | 514A3-82661 | 196 | 516G3-82232 | 196 |
| 509K3-83411 | 196 | 514A1-41001 | 81 | 514A3-82671 | 196 | 516G3-82241 | 196 |
| 509K3-83421 | 196 | 514A1-41011 | 53 | 514A3-82681 | 196 | 516G3-82241 | 198 |
| 509K3-83431 | 196 | 514A1-41021 | 53 | 514A5-12011 | 123 | 516G3-82251 | 196 |
| 509K3-83441 | 196 | 514A1-41031 | 53 | 514A5-12011 | 123 | 516G3-82261 | 196 |
| 509K3-83451 | 194 | 514A1-42041 | 72 | 514A5-12021 | 124 | 516G3-82271 | 196 |
| 509K3-83461 | 194 | 514A2-42201 | 122 | 514A5-12021 | 125 | 516G3-82281 | 198 |
| 509P5-90101 | 21 | 514A2-72411 | 179 | 514A5-12021 | 127 | 516G3-82291 | 198 |
| 509P5-92001 | 21 | 514A2-72411 | 179 | 514A5-32341 | 72 | 516G3-82521 | 39 |
| 509P5-92011 | 21 | 514A2-72411 | 179 | 514A5-32341 | 72 | 516G3-82551 | 196 |
| 509P5-92021 | 21 | 514A2-82012 | 194 | 516G0-60101 | 3 | 516G3-82561 | 196 |
| 509P5-92031 | 21 | 514A3-02002 | 196 | 516G0-62001 | 4 | 516G3-82571 | 196 |
| 509P5-92041 | 21 | 514A3-72052 | 98 | 516G0-62011 | 3 | 516G3-82581 | 196 |
| 509P5-92051 | 21 | 514A3-72052 | 99 | 516G1-42111 | 52 | 516G3-82591 | 196 |
| 509P5 92061 | 21 | 514A3 72062 | 98 | 516G1-42111 | 72 | 516G3-82801 | 194 |
| 509P5-92071 | 21 | 514A3-72062 | 99 | 516G1-42211 | 54 | 516G3-82801 | 195 |
| 509P5-92081 | 21 | 514A3-72091 | 42 | 516G1-42211 | 72 | 516G3-82801 | 196 |
| 509P5-92091 | 21 | 514A3-72101 | 101 | 516G2-72051 | 152 | 516G3-82801 | 197 |
| 509P5-92101 | 21 | 514A3-72211 | 98 | 516G2-72701 | 194 | 516G3-82801 | 198 |
| 509P5-92111 | 21 | 514A3-72211 | 99 | 516G2-72701 | 195 | 516G3-82811 | 196 |
| 509P5-92121 | 21 | 514A3-82002 | 194 | 516G2 72701 | 196 | 516G3 82821 | 194 |
| 509P5-92181 | 21 | 514A3-82002 | 195 | 516G2-72701 | 197 | 516G3-82821 | 196 |
| 509P5-92201 | 21 | 514A3-82002 | 196 | 516G2-72701 | 198 | 516G3-82831 | 194 |
| 509P5-92211 | 21 | 514A3-82002 | 197 | 516G2-72711 | 194 | 516G3-82831 | 196 |
| 509P5-92231 | 21 | 514A3-82002 | 198 | 516G2-72711 | 195 | 516G3-82841 | 196 |
| 509P5-92241 | 21 | 514A3-82012 | 194 | 516G2-72711 | 196 | 516G3-82851 | 196 |
| 509P5-92481 | 22 | 514A3-82012 | 196 | 516G2-72711 | 197 | 516G3-82851 | 198 |
| 509P5-92491 | 21 | 514A3-82022 | 194 | 516G2-72711 | 198 | 516G3-82861 | 196 |
| 509P5-92511 | 21 | 514A3-82022 | 196 | 516G2-82051 | 194 | 516G3-82871 | 196 |
| 509P5-92521 | 21 | 514A3-82032 | 196 | 516G2-82061 | 194 | 516G3-82881 | 196 |
| 509P5-92531 | 21 | 514A3-82042 | 196 | 516G3-82001 | 196 | 516G3-82891 | 198 |
| 509P5-92541 | 21 | 514A3-82042 | 198 | 516G3-82011 | 194 | 516G3-82901 | 198 |
| 509P9-90101 | 47 | 514A3-82052 | 196 | 516G3-82011 | 196 | 516G3-82911 | 196 |
| 509P9-90101 | 47 | 514A3-82062 | 196 | 516G3-82021 | 196 | 516G3-82921 | 196 |
| 509S3-92261 | 56 | 514A3-82072 | 196 | 516G3-82031 | 196 | 516G3-82931 | 196 |
| 509S3-92261 | 56 | 514A3-82081 | 196 | 516G3-82031 | 198 | 516G3-82941 | 196 |
| 509S3-92261 | 159 | 514A3-82301 | 192 | 516G3-82041 | 196 | 516G3-82951 | 196 |
| 509S3-92261 | 159 | 514A3-82301 | 192 | 516G3-82051 | 196 | 516G3-83601 | 196 |
| 509S3-92261 | 159 | 514A3-82301 | 215 | 516G3-82061 | 198 | 516G3-83611 | 196 |
| 509S3-92261 | 159 | 514A3-82321 | 192 | 516G3-82071 | 198 | 516G3-83621 | 196 |

PARTS NUMBER INDEX


| Part No. | Fig.No. | Part No. | Fig.No. | Part No. | Fig.No. | Part No. | Fig.No. |
|---|---|---|---|---|---|---|---|
| 516G3-83631 | 196 | 52N51-42111 | 52 | 52N53-72101 | 28 | 52N54-60251 | 173 |
| 516G3-83701 | 196 | 52N51-42121 | 51 | 52N53-72201 | 98 | 52N55-00101 | 123 |
| 516G3-83711 | 196 | 52N51-42121 | 52 | 52N53-72201 | 99 | 52N55-00101 | 123 |
| 516G3-83721 | 196 | 52N51-42151 | 49 | 52N53-72211 | 98 | 52N55-00111 | 123 |
| 516G3-83731 | 196 | 52N51-42151 | 50 | 52N53-72211 | 99 | 52N55-00111 | 123 |
| 516G5-13051 | 123 | 52N51-42161 | 48 | 52N53-72301 | 28 | 52N55-00121 | 123 |
| 516G5-13151 | 123 | 52N51-42161 | 50 | 52N53-72401 | 28 | 52N55-00121 | 123 |
| 516G6-92001 | 77 | 52N51-42301 | 48 | 52N53-74001 | 207 | 52N55-00131 | 123 |
| 516G6-92011 | 77 | 52N51-42301 | 49 | 52N53-74001 | 215 | 52N55-00131 | 123 |
| 516G6-92022 | 77 | 52N51-42301 | 50 | 52N53-80101 | 99 | 52N55-00141 | 123 |
| 516G6-92031 | 77 | 52N51-42401 | 51 | 52N53-80102 | 99 | 52N55-00501 | 128 |
| 516G6-92151 | 77 | 52N51-42401 | 52 | 52N53-80121 | 99 | 52N55-00501 | 128 |
| 516G7-22001 | 57 | 52N51-42411 | 51 | 52N53-80122 | 99 | 52N55-00511 | 126 |
| 516G9-10101 | 71 | 52N51-42411 | 52 | 52N53-82001 | 28 | 52N55-00511 | 126 |
| 516G9-12011 | 71 | 52N51-42511 | 51 | 52N53-82101 | 194 | 52N55-00511 | 126 |
| 516M5-12301 | 128 | 52N51-42511 | 52 | 52N53-82101 | 196 | 52N55-00521 | 126 |
| 518G0-52531 | 156 | 52N51-61201 | 207 | 52N53-82111 | 194 | 52N55-00521 | 126 |
| 518G0-52541 | 156 | 52N51-61211 | 207 | 52N53-82111 | 196 | 52N55-00521 | 126 |
| 518G2-72121 | 39 | 52N51-61301 | 215 | 52N53-82121 | 196 | 52N55-00551 | 128 |
| 52B43-72001 | 35 | 52N51-61311 | 215 | 52N53-82131 | 196 | 52N55-00551 | 128 |
| 52B50-80211 | 20 | 52N51-70101 | 19 | 52N53-82141 | 196 | 52N55-02451 | 42 |
| 52B50-92201 | 7 | 52N51-70201 | 19 | 52N53-82141 | 198 | 52N55-02451 | 42 |
| 52B50-92251 | 7 | 52N51-70301 | 19 | 52N53-82151 | 196 | 52N55-12001 | 127 |
| 52B51-70101 | 19 | 52N52-32001 | 28 | 52N53-82161 | 196 | 52N55-12011 | 127 |
| 52B53-72001 | 36 | 52N52-32401 | 28 | 52N53-82171 | 196 | 52N55-12101 | 124 |
| 52B54-70101 | 1 | 52N52-32501 | 28 | 52N53-82181 | 198 | 52N55-12111 | 124 |
| 52B56-20101 | 26 | 52N52-62001 | 162 | 52N53-82191 | 198 | 52N55-30401 | 155 |
| 52B56-20101 | 26 | 52N52-62011 | 162 | 52N53-82201 | 196 | 52N55-30401 | 155 |
| 52B56-52001 | 11 | 52N52-62101 | 94 | 52N53-82211 | 196 | 52N55-30451 | 156 |
| 52B57-60201 | 1 | 52N52-62201 | 94 | 52N53-82221 | 196 | 52N55-30501 | 164 |
| 52B57-60251 | 1 | 52N52-62301 | 162 | 52N53-82231 | 196 | 52N55-30501 | 164 |
| 52B57-62201 | 11 | 52N52-62401 | 162 | 52N53-82241 | 196 | 52N55-30511 | 164 |
| 52C46-52101 | 11 | 52N52-72101 | 194 | 52N53-82301 | 194 | 52N55-30511 | 164 |
| 52C47-60201 | 1 | 52N52-72101 | 195 | 52N53-82301 | 196 | 52N55-32051 | 159 |
| 52E00 52121 | 156 | 52N52 72101 | 196 | 52N53-82311 | 194 | 52N55-32051 | 159 |
| 52E00-52191 | 165 | 52N52-72101 | 197 | 52N53-82311 | 196 | 52N55-32061 | 159 |
| 52E00-52201 | 165 | 52N52-72101 | 198 | 52N53-82321 | 196 | 52N55-32061 | 159 |
| 52E00-53051 | 150 | 52N52-72201 | 194 | 52N53-82331 | 196 | 52N55-32091 | 159 |
| 52N42-12001 | 62 | 52N52-72201 | 195 | 52N53-82341 | 196 | 52N55-32091 | 159 |
| 52N43-72001 | 37 | 52N52-72201 | 196 | 52N53-82341 | 198 | 52N55-32091 | 159 |
| 52N43-72101 | 27 | 52N52-72201 | 197 | 52N53 82351 | 196 | 52N55 32091 | 159 |
| 52N50-80201 | 20 | 52N52-72201 | 198 | 52N53-82361 | 196 | 52N55-32101 | 159 |
| 52N50-80211 | 20 | 52N52-82401 | 194 | 52N53-82371 | 196 | 52N55-32101 | 159 |
| 52N50-80221 | 20 | 52N52-82411 | 194 | 52N53-82381 | 198 | 52N55-32111 | 159 |
| 52N50-80301 | 20 | 52N52-82501 | 194 | 52N53-82391 | 198 | 52N55-32111 | 159 |
| 52N50-82001 | 20 | 52N52-82511 | 194 | 52N53-82401 | 196 | 52N55-32141 | 165 |
| 52N50-82011 | 20 | 52N52-90201 | 123 | 52N53-82411 | 196 | 52N55-32141 | 165 |
| 52N50-82021 | 20 | 52N53-70101 | 98 | 52N53-82421 | 196 | 52N55-32171 | 156 |
| 52N50-82021 | 20 | 52N53-70102 | 98 | 52N53-82431 | 196 | 52N55-32171 | 156 |
| 52N50-90101 | 123 | 52N53-70121 | 98 | 52N53-82441 | 196 | 52N55-32211 | 102 |
| 52N50-90201 | 163 | 52N53-70122 | 98 | 52N53-83201 | 11 | 52N55-32211 | 102 |
| 52N50-92202 | 8 | 52N53-70201 | 98 | 52N53-83201 | 12 | 52N55-32301 | 164 |
| 52N51-30201 | 55 | 52N53-70202 | 98 | 52N53-91901 | 225 | 52N55-32301 | 164 |
| 52N51-31001 | 55 | 52N53-70301 | 99 | 52N53-91931 | 225 | 52N55-32311 | 164 |
| 52N51-32001 | 55 | 52N53-70302 | 99 | 52N53-91941 | 225 | 52N55-32311 | 164 |
| 52N51-32011 | 55 | 52N53-70321 | 99 | 52N53-91951 | 225 | 52N55-32331 | 158 |
| 52N51-32101 | 55 | 52N53-70322 | 99 | 52N53-91961 | 225 | 52N55-32331 | 158 |
| 52N51-42101 | 51 | 52N53-70401 | 99 | 52N54-60221 | 170 | 52N55-32401 | 165 |
| 52N51-42101 | 52 | 52N53-70402 | 99 | 52N54-60231 | 171 | 52N55-32401 | 165 |
| 52N51-42111 | 51 | 52N53-72001 | 38 | 52N54-60241 | 172 | 52N55-32411 | 165 |

PARTS NUMBER INDEX


| Part No. | Fig.No. | Part No. | Fig.No. | Part No. | Fig.No. | Part No. | Fig.No. |
|---|---|---|---|---|---|---|---|
| 52N55-32411 | 165 | 52N57-E2201 | 83 | 52N58-22101 | 72 | 522A2-18391 | 142 |
| 52N55-40081 | 165 | 52N57-E2201 | 84 | 52N58-82001 | 76 | 522A2-18541 | 145 |
| 52N55-40211 | 156 | 52N57-E2201 | 84 | 52N58-82101 | 76 | 522A2-18551 | 145 |
| 52N55-40411 | 165 | 52N57-E2201 | 85 | 52N58-92001 | 54 | 522A2-18561 | 145 |
| 52N55-42251 | 165 | 52N57-E2201 | 85 | 52N58-92021 | 54 | 522A2-18571 | 145 |
| 52N55-42251 | 165 | 52N57-E2201 | 86 | 52N58-92021 | 80 | 522A2-18581 | 145 |
| 52N55-42301 | 41 | 52N57-E2201 | 86 | 52N58-92021 | 81 | 522A2-18591 | 145 |
| 52N55-42601 | 159 | 52N57-20201 | 56 | 52N58-92041 | 54 | 522A2-42001 | 40 |
| 52N55-42611 | 159 | 52N57-20211 | 56 | 52N58-92111 | 52 | 522A2-61561 | 93 |
| 52N55-92131 | 21 | 52N57-20221 | 56 | 52N58-92111 | 54 | 522A3-80401 | 107 |
| 52N55-92261 | 21 | 52N57-20301 | 56 | 52N58-92201 | 53 | 522A3-80401 | 107 |
| 52N55-92321 | 25 | 52N57-20311 | 56 | 52N58-92211 | 53 | 522A3-80451 | 119 |
| 52N55-92341 | 25 | 52N57-20521 | 56 | 52N58-92251 | 53 | 522A3-80451 | 119 |
| 52N55-92381 | 22 | 52N57-20521 | 56 | 52N59-02001 | 71 | 522A3-82441 | 196 |
| 52N55-92401 | 21 | 52N57-22231 | 56 | 52N59-20411 | 155 | 522A3-82641 | 194 |
| 52N55-92441 | 22 | 52N57-22241 | 56 | 52N59-92021 | 127 | 522A3-82641 | 196 |
| 52N55-92451 | 22 | 52N57-22341 | 56 | 52N59-92031 | 127 | 522A3-82841 | 194 |
| 52N55-92471 | 22 | 52N57-22351 | 56 | 52N59-92051 | 127 | 522A3-82841 | 196 |
| 52N55-92601 | 21 | 52N57-22351 | 56 | 52N59-92051 | 127 | 522A3-83041 | 196 |
| 52N55-92631 | 21 | 52N57-22381 | 56 | 52N59-92101 | 44 | 522A3-83061 | 196 |
| 52N55-92671 | 21 | 52N57-22381 | 56 | 52N59-92101 | 47 | 522A3-83061 | 198 |
| 52N56-12051 | 74 | 52N57-42001 | 102 | 52N59-92121 | 127 | 522A3-83241 | 196 |
| 52N56-20101 | 26 | 52N57-42011 | 102 | 52N59-92161 | 127 | 522A3-83241 | 198 |
| 52N56-20101 | 26 | 52N57-42021 | 102 | 52N59-92201 | 43 | 522A3-83441 | 196 |
| 52N56-22011 | 82 | 52N57-42031 | 102 | 52N59-92201 | 43 | 522A3-83461 | 196 |
| 52N56-22021 | 82 | 52N57-42041 | 102 | 52N59-92201 | 43 | 522A3-83641 | 196 |
| 52N56-22021 | 83 | 52N57-42051 | 102 | 52N59-92501 | 47 | 522A3-83661 | 196 |
| 52N56-22021 | 83 | 52N57-42101 | 88 | 52N59-92501 | 47 | 522A3-83841 | 196 |
| 52N56-22021 | 84 | 52N57-50101 | 75 | 521A2-42001 | 39 | 522A3-83861 | 196 |
| 52N56-22021 | 84 | 52N57-50301 | 75 | 521A2-42061 | 76 | 522A6-80201 | 107 |
| 52N56-22021 | 85 | 52N57-52001 | 79 | 522A1-10201 | 4 | 522A6-80211 | 107 |
| 52N56-22021 | 85 | 52N57-52001 | 80 | 522A2-10401 | 136 | 522A6-80221 | 107 |
| 52N56-22021 | 86 | 52N57-52001 | 81 | 522A2-10401 | 145 | 522A6-80301 | 112 |
| 52N56-22021 | 86 | 52N57-52031 | 79 | 522A2-11601 | 145 | 522A6-80311 | 112 |
| 52N56 22201 | 166 | 52N57 52031 | 80 | 522A2-18011 | 142 | 522A6-80321 | 112 |
| 52N56-22201 | 166 | 52N57-52031 | 81 | 522A2-18021 | 142 | 522A6-80401 | 114 |
| 52N56-22401 | 82 | 52N57-52051 | 78 | 522A2-18031 | 142 | 522A6-80411 | 114 |
| 52N56-52001 | 12 | 52N57-52061 | 78 | 522A2-18041 | 142 | 522A6-80421 | 114 |
| 52N56-72001 | 73 | 52N57-52101 | 78 | 522A2-18051 | 142 | 522A6-80431 | 114 |
| 52N56-92001 | 77 | 52N57-52111 | 78 | 522A2-18071 | 142 | 522A6-80441 | 114 |
| 52N56-92101 | 77 | 52N57-52151 | 78 | 522A2 18081 | 142 | 522A6 80451 | 114 |
| 52N56-92201 | 77 | 52N57-52161 | 78 | 522A2-18091 | 142 | 522A6-80501 | 119 |
| 52N56-92211 | 77 | 52N57-60451 | 156 | 522A2-18101 | 142 | 522A6-80511 | 119 |
| 52N57-E2001 | 83 | 52N57-60501 | 2 | 522A2-18111 | 142 | 522A6-80521 | 119 |
| 52N57-E2001 | 83 | 52N57-60511 | 2 | 522A2-18121 | 142 | 522A7-12211 | 39 |
| 52N57-E2001 | 84 | 52N57-62201 | 12 | 522A2-18131 | 142 | 522A7-22011 | 57 |
| 52N57-E2001 | 84 | 52N57-72001 | 160 | 522A2-18161 | 142 | 522B0-92021 | 7 |
| 52N57-E2001 | 85 | 52N57-72001 | 161 | 522A2-18171 | 142 | 522B0-92021 | 8 |
| 52N57-E2001 | 85 | 52N58-10201 | 158 | 522A2-18201 | 142 | 522B0-92031 | 7 |
| 52N57-E2001 | 86 | 52N58-10211 | 163 | 522A2-18211 | 142 | 522B0-92031 | 8 |
| 52N57-E2001 | 86 | 52N58-10221 | 163 | 522A2-18221 | 142 | 522B0-92041 | 7 |
| 52N57-E2011 | 83 | 52N58-10301 | 158 | 522A2-18281 | 142 | 522B0-92041 | 8 |
| 52N57-E2011 | 83 | 52N58-10301 | 163 | 522A2-18301 | 142 | 522B0-92051 | 7 |
| 52N57-E2011 | 84 | 52N58-10311 | 159 | 522A2-18311 | 142 | 522B0-92051 | 8 |
| 52N57-E2011 | 84 | 52N58-12201 | 158 | 522A2-18321 | 142 | 524T3-84031 | 192 |
| 52N57-E2011 | 85 | 52N58-12501 | 158 | 522A2-18331 | 142 | 524T3-84031 | 215 |
| 52N57-E2011 | 85 | 52N58-12501 | 163 | 522A2-18341 | 142 | 524W3-83091 | 21 |
| 52N57-E2011 | 86 | 52N58-12511 | 158 | 522A2-18352 | 142 | 524W5-12091 | 123 |
| 52N57-E2011 | 86 | 52N58-12511 | 163 | 522A2-18361 | 142 | 52672-72231 | 204 |
| 52N57-E2201 | 83 | 52N58-22001 | 72 | 522A2-18371 | 142 | 52672-72231 | 211 |

PARTS NUMBER INDEX


| Part No. | Fig.No. | Part No. | Fig.No. | Part No. | Fig.No. | Part No. | Fig.No. |
|---|---|---|---|---|---|---|---|
| 52672-72231 | 219 | 532N6-52011 | 11 | 534A3-82701 | 196 | 536G3-82041 | 198 |
| 52672-72231 | 220 | 534A0-60011 | 4 | 534A3-82711 | 196 | 536G3-82051 | 196 |
| 52672-72231 | 226 | 534A0-62001 | 4 | 534A3-82721 | 196 | 536G3-82061 | 196 |
| 52672-72231 | 227 | 534A0-62011 | 4 | 534A3-82731 | 196 | 536G3-82071 | 196 |
| 52672-82073 | 194 | 534A1-64402 | 208 | 534A3-82741 | 196 | 536G3-82081 | 198 |
| 52676-80202 | 111 | 534A1-64402 | 216 | 534A4-22001 | 125 | 536G3-82091 | 198 |
| 52676-80302 | 111 | 534A1-64412 | 208 | 534A4-22011 | 125 | 536G3-82101 | 196 |
| 52676-80402 | 111 | 534A1-64412 | 216 | 534A5-00401 | 128 | 536G3-82111 | 196 |
| 52676-80601 | 107 | 534A2-74001 | 208 | 534A5-00411 | 128 | 536G3-82121 | 196 |
| 52676-80601 | 107 | 534A2-74001 | 216 | 534A5-00411 | 128 | 536G3-82131 | 196 |
| 52676-80802 | 112 | 534A2-74051 | 208 | 534A5-00411 | 128 | 536G3-82141 | 196 |
| 528F3-82021 | 198 | 534A2-74051 | 216 | 534A6-80171 | 109 | 536G3-82201 | 39 |
| 528F3-82031 | 198 | 534A2-74101 | 208 | 534A6-80271 | 121 | 53651-12551 | 3 |
| 528F3-82041 | 196 | 534A2-74101 | 216 | 534A6-85001 | 121 | 53651-12551 | 4 |
| 528F3-82051 | 196 | 534A2-74201 | 208 | 534A6-85011 | 109 | 53652-82011 | 194 |
| 528F3-82061 | 196 | 534A2-74201 | 216 | 534A7-02001 | 40 | 53652-82011 | 196 |
| 528F3-82071 | 196 | 534A2-74301 | 208 | 534A7-50601 | 79 | 53652-82401 | 194 |
| 528F3-82081 | 196 | 534A2-74301 | 216 | 534A7-50601 | 80 | 53652-82401 | 196 |
| 529F1-42201 | 53 | 534A3-82311 | 194 | 534A7-50601 | 81 | 53652-82541 | 194 |
| 529F1-42251 | 53 | 534A3-82311 | 195 | 534A7-72001 | 31 | 53652-82551 | 194 |
| 529F1-42251 | 80 | 534A3-82311 | 196 | 534A7-72001 | 32 | 53656-80201 | 113 |
| 529F1-42251 | 81 | 534A3-82311 | 197 | 534A7-72001 | 33 | 53656-80211 | 113 |
| 529F3-70401 | 175 | 534A3-82311 | 198 | 534A7-72001 | 34 | 53656-80401 | 114 |
| 529F3-70411 | 176 | 534A3-82321 | 196 | 534A9-22001 | 125 | 53656-80411 | 114 |
| 529F3-70411 | 177 | 534A3-82331 | 194 | 534A9-22011 | 125 | 53656-80501 | 113 |
| 529F3-70421 | 178 | 534A3-82331 | 196 | 534A9-22211 | 41 | 53656-80511 | 113 |
| 529F3-82061 | 198 | 534A3-82341 | 194 | 534A9-92131 | 45 | 53656-80601 | 113 |
| 529F3-82071 | 198 | 534A3-82341 | 196 | 534A9-92131 | 45 | 53656-80611 | 113 |
| 529F3-82081 | 198 | 534A3-82351 | 196 | 534F3-82001 | 115 | 53656-80701 | 113 |
| 529F3-82091 | 198 | 534A3-82361 | 196 | 534F3-82001 | 117 | 53656-80711 | 113 |
| 529F3-82101 | 192 | 534A3-82361 | 198 | 534F3-82001 | 119 | 53656-80901 | 113 |
| 529F3-82101 | 215 | 534A3-82371 | 196 | 534F3-82001 | 121 | 53656-80901 | 114 |
| 529F3-82111 | 192 | 534A3-82381 | 196 | 53456-80502 | 105 | 53656-80911 | 113 |
| 529F3-82111 | 215 | 534A3-82391 | 196 | 53456-80702 | 105 | 53656-80911 | 114 |
| 529F3-82151 | 196 | 534A3-82401 | 198 | 53456-80902 | 103 | 53656-81301 | 119 |
| 529F3-82242 | 198 | 534A3-82411 | 198 | 53456-80902 | 105 | 53656-81301 | 119 |
| 529F3-82252 | 198 | 534A3-82421 | 194 | 53456-82052 | 112 | 53656-81401 | 117 |
| 529F3-82501 | 192 | 534A3-82421 | 195 | 53456-82062 | 112 | 53656-81501 | 115 |
| 529F3-82511 | 192 | 534A3-82421 | 196 | 53457-40003 | 111 | 53656-81501 | 117 |
| 529F3-82521 | 192 | 534A3-82421 | 197 | 53457-42151 | 111 | 53656-81601 | 117 |
| 529F3-82531 | 192 | 534A3-82421 | 198 | 535C8-92051 | 53 | 53656-82001 | 112 |
| 529F3-82541 | 192 | 534A3-82431 | 196 | 535C9-92011 | 46 | 53656-82041 | 104 |
| 529F3-82601 | 196 | 534A3-82441 | 194 | 535H3-82261 | 146 | 53656-82041 | 106 |
| 529F3-82611 | 196 | 534A3-82441 | 196 | 535H3-82261 | 146 | 53656-82041 | 108 |
| 529F3-82621 | 196 | 534A3-82451 | 194 | 536B6-60302 | 10 | 53656-82041 | 110 |
| 529F3-82631 | 196 | 534A3-82451 | 196 | 536B6-60302 | 10 | 53656-82041 | 113 |
| 529F3-82641 | 196 | 534A3-82461 | 196 | 536G2-82021 | 194 | 53656-82041 | 113 |
| 529F3-82801 | 196 | 534A3-82471 | 196 | 536G2-82181 | 194 | 53656-82041 | 114 |
| 529F3-82811 | 196 | 534A3-82471 | 198 | 536G2-82181 | 195 | 53656-82041 | 114 |
| 529F3-82821 | 196 | 534A3-82481 | 196 | 536G2-82181 | 196 | 53656-82051 | 104 |
| 529F3-82831 | 196 | 534A3-82491 | 196 | 536G2-82181 | 197 | 53656-82051 | 106 |
| 529F7-22001 | 57 | 534A3-82501 | 196 | 536G2-82181 | 198 | 53656-82051 | 108 |
| 529F7-52241 | 79 | 534A3-82511 | 198 | 536G2-82281 | 194 | 53656-82051 | 110 |
| 529F7-52241 | 81 | 534A3-82521 | 198 | 536G3-82001 | 194 | 53656-82051 | 113 |
| 530C1-42001 | 48 | 534A3-82531 | 194 | 536G3-82001 | 196 | 53656-82051 | 113 |
| 530C3-82361 | 40 | 534A3-82541 | 196 | 536G3-82011 | 194 | 53656-82051 | 114 |
| 531A0-52521 | 45 | 534A3-82551 | 196 | 536G3-82011 | 196 | 53656-82051 | 114 |
| 531A0-52521 | 45 | 534A3-82561 | 196 | 536G3-82021 | 196 | 53656-82061 | 104 |
| 532A1-70201 | 19 | 534A3-82571 | 196 | 536G3-82031 | 196 | 53656-82061 | 106 |
| 532A1-70201 | 20 | 534A3-82581 | 196 | 536G3-82041 | 196 | 53656-82061 | 108 |

PARTS NUMBER INDEX


| Part No. | Fig.No. | Part No. | Fig.No. | Part No. | Fig.No. | Part No. | Fig.No. |
|---|---|---|---|---|---|---|---|
| 53656-82061 | 110 | 539A5-92251 | 21 | 577H3-82151 | 194 | 62459-23371 | 218 |
| 53656-82061 | 113 | 539A6-22021 | 39 | 577H3-82151 | 195 | 63110-18921 | 192 |
| 53656-82061 | 113 | 539A6-52051 | 16 | 577H3-82151 | 196 | 63110-18921 | 215 |
| 53656-82061 | 114 | 539A6-52151 | 16 | 577H3-82151 | 197 | 63130-15301 | 217 |
| 53656-82061 | 114 | 539A6-80201 | 107 | 577H3-82151 | 198 | 63130-15301 | 225 |
| 53657-42053 | 111 | 539A6-80301 | 119 | 577H3-82161 | 196 | 641B0-12701 | 125 |
| 53657-42081 | 88 | 539A7-52041 | 78 | 577H3-82171 | 194 | 641B0-12751 | 125 |
| 53657-42091 | 88 | 539A7-52101 | 80 | 577H3-82171 | 196 | 79244-23319 | 93 |
| 53658-43001 | 212 | 539A7-52101 | 81 | 577H3-82181 | 194 | 89140-00006 | 136 |
| 53658-43001 | 227 | 539A8-22151 | 72 | 577H3-82181 | 196 | 93956-59279 | 31 |
| 53658-43011 | 212 | 539A8-92251 | 53 | 577H3-82191 | 196 | 93956-59279 | 32 |
| 53658-43011 | 227 | 539A8-92251 | 80 | 577H3-82201 | 196 | 93956-59279 | 33 |
| 53658-43021 | 212 | 539A8-92251 | 81 | 577H3-82201 | 198 | 93956-59279 | 34 |
| 53658-43021 | 227 | 539A9-02011 | 71 | 577H3-82211 | 196 | 97103-35431 | 122 |
| 53658-43031 | 212 | 539A9-32001 | 128 | 577H3-82221 | 196 | | |
| 53658-43031 | 227 | 539H6-52051 | 16 | 577H3-82231 | 196 | | |
| 53658-43041 | 212 | 539H6-52151 | 16 | 577H3-82241 | 198 | | |
| 53658-43041 | 227 | 539H6-52251 | 11 | 577H3-82251 | 198 | | |
| 53666-80201 | 106 | 539H6-52351 | 11 | 577H3-82261 | 196 | | |
| 53666-80401 | 108 | 542F3-80101 | 166 | 577H3-82701 | 196 | | |
| 53666-80501 | 106 | 542F3-80201 | 167 | 577H3-82711 | 196 | | |
| 53666-80601 | 104 | 542F3-82001 | 166 | 577H3-82721 | 196 | | |
| 53666-80601 | 106 | 542F3-82001 | 166 | 577H3-82731 | 196 | | |
| 53666-80701 | 106 | 542F3-82001 | 167 | 577H3-82741 | 194 | | |
| 53666-80901 | 118 | 542F3-82011 | 166 | 577H5-13051 | 128 | | |
| 53666-81301 | 120 | 542F3-82011 | 166 | 577H5-13051 | 128 | | |
| 53666-81401 | 118 | 542F3-82011 | 167 | 577H5-13051 | 128 | | |
| 53666-81501 | 116 | 542F3-82021 | 166 | 577P3-74001 | 207 | | |
| 53666-81501 | 118 | 542F3-82021 | 166 | 577P3-74001 | 209 | | |
| 53666-81601 | 118 | 542F3-82021 | 167 | 577P3-74001 | 209 | | |
| 53666-81801 | 104 | 54315-32561 | 55 | 577P3-74001 | 215 | | |
| 53666-81801 | 106 | 54612-42021 | 3 | 577P3-74001 | 217 | | |
| 53666-81801 | 106 | 54612-72281 | 39 | 577P3-74001 | 217 | | |
| 53666-81801 | 108 | 55593-02371 | 178 | 577P3-74001 | 217 | | |
| 53666 81901 | 116 | 55593 60301 | 70 | 577P3-74011 | 207 | | |
| 53666-81901 | 118 | 55593-62061 | 70 | 577P3-74011 | 209 | | |
| 53666-81901 | 118 | 55593-62551 | 213 | 577P3-74011 | 215 | | |
| 53666-81901 | 120 | 55792-52601 | 78 | 577P3-74011 | 217 | | |
| 53666-82021 | 116 | 55792-52611 | 78 | 577P3-74011 | 217 | | |
| 53666-82021 | 118 | 55792-52621 | 78 | 62A89-21811 | 210 | | |
| 53666-82021 | 120 | 55792-52641 | 78 | 62A89 21811 | 218 | | |
| 53666-82031 | 116 | 558A9-92001 | 44 | 62A89-21831 | 210 | | |
| 53666-82031 | 118 | 558A9-92001 | 45 | 62A89-21831 | 210 | | |
| 53666-82031 | 120 | 558A9-92001 | 45 | 62A89-21831 | 218 | | |
| 53666-82041 | 116 | 558A9-92001 | 46 | 62A89-21831 | 218 | | |
| 53666-82041 | 118 | 558A9-92001 | 79 | 62A89-21851 | 210 | | |
| 53666-82041 | 120 | 558A9-92001 | 81 | 62A89-21851 | 210 | | |
| 53675-55051 | 186 | 55952-18021 | 142 | 62A89-21851 | 210 | | |
| 53675-55051 | 205 | 56110-63521 | 57 | 62A89-21851 | 218 | | |
| 53675-55051 | 221 | 57045-42141 | 56 | 62A89-21851 | 218 | | |
| 53675-55051 | 228 | 57045-42141 | 56 | 62A89-21851 | 218 | | |
| 537A6-60302 | 9 | 57045-52141 | 101 | 62050-12331 | 217 | | |
| 537A6-60302 | 9 | 57045-52151 | 101 | 62050-12331 | 225 | | |
| 538G3-82201 | 40 | 571A3-82361 | 194 | 62150-14321 | 228 | | |
| 539A0-82201 | 20 | 571A3-82361 | 195 | 62156-52501 | 110 | | |
| 539A2-72121 | 40 | 571A3-82361 | 196 | 62459-23371 | 210 | | |
| 539A2-82051 | 194 | 571A3-82361 | 197 | 62459-23371 | 210 | | |
| 539A5-32361 | 45 | 571A3-82361 | 198 | 62459-23371 | 210 | | |
| 539A5-32361 | 45 | 571A6-82081 | 119 | 62459-23371 | 218 | | |
| 539A5-92141 | 21 | 577H2-82021 | 194 | 62459-23371 | 218 | | |

No.PF−2A0C

2005年　2月　発行
2005年　8月　改訂
2005年　12月　改訂

TCM株式会社
本　社　大阪市西区京町堀1−15−10

発 行　TCMテクノ株式会社

ISSUED:FEBRUARY,2005
REVISED:AUGUST,2005
REVISED:DECEMBER,2005

TCM CORPORATION
INTERNATIONAL MARKETING DIVISION : 1-15-5, Nishi−shimbashi, Minato−ku, Tokyo
105−0003, Japan
FAX : Japan +81−3−35918152, 3−35918153

無断で転載・複製を禁ず
All rights reserved.

SA−0512001(H)　Printed in Japan